PHILIPS

Lighting



OptiVision MVP507

MVP507 MHN-LA2000W/842 400V MB SI SL

OPTIVISION - MASTER MHN-LA - 2000 W - Medium beam - Sealing

Optivision is an asymmetric downlighting luminaire that combines compact dimensions with very high efficiency. Available with narrow, medium and wide beams for flexibility in application, it provides excellent control of spill light and limitation of glare and upward leakage of light. Optivision can accommodate metal-halide lamps for good color rendering or high-pressure sodium lamps for economical operation.Excellent spill-light control, limitation of glare and upward leakage of light is secured by asymmetric optics that achieve peak intensity at 60º and a sharp cut-off of light at 80º. The MHN-LA/FC lamps guarantee pleasant and natural color rendering and comfortable atmosphere.

Product data

General Information	
Number of light sources	1 [1 pc]
Lamp family code	MHN-LA [MASTER MHN-LA]
Lamp power	2000 W
Light source colour	842 neutral white
Kombipack	Lamp(s) included
Protection class IEC	Safety class I (I)
CE mark	CE mark
ENEC mark	-
Ball impact resistance mark	Ball Impact Resistance mark
Mechanical accessories	SL [Sealing]
Outdoor optic type	Medium beam
Product Family Code	MVP507 [OPTIVISION]

Operating and Electrical	
Lamp supply voltage	400 V [400]
Input voltage	400 V
Ignitor	SI [Series]

Approval and Application	
Ingress protection code	IP65 [Dust penetration-protected, jet-proof]
Mech. impact protection code	IK08 [5 J vandal-protected]

Product Data	
Full product code	872790029578800
Order product name	MVP507 MHN-LA2000W/842 400V MB SI SL
EAN/UPC – product	8727900295788
Order code	29578800

OptiVision MVP507

Numerator – quantity per pack	1
Numerator – packs per outer box	1
Material no. (12NC)	910403787512
Net weight (piece)	17.200 kg

Dimensional drawing

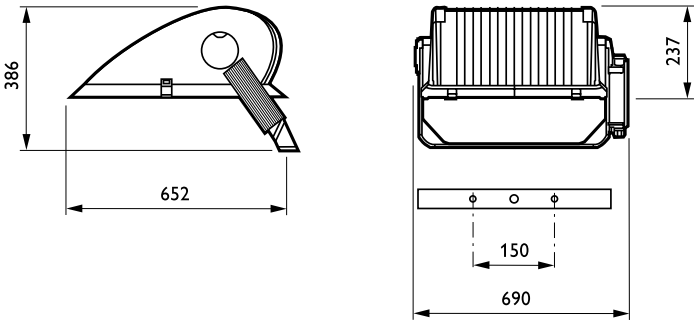

OptiVision MVP507

© 2019 Signify Holding All rights reserved. Signify does not give any representation or warranty as to the accuracy or completeness of the information included herein and shall not be liable for any action in reliance thereon. The information presented in this document is not intended as any commercial offer and does not form part of any quotation or contract, unless otherwise agreed by Signify. Philips and the Philips Shield Emblem are registered trademarks of Koninklijke Philips N.V.