

ProAir

ST640Z SK BK

Skirt

Store designers want a spot that fits in with their store design. Visual merchandisers need the very best light quality and spots that are easily adjustable. And maintenance managers and green champions want to reduce energy consumption and maintenance costs. ProAir offers store designers a LED spot with an elegant and compact design that they can customise to suit their needs. It gives visual merchandisers great rendering of colours and whites and excellent colour consistency, as well as well-defined, clean beams for maximum impact. What's more, a dedicated accessory makes it possible to aim the spot from the floor, for added convenience. And the high-efficiency versions of ProAir offer low maintenance and energy consumption.

Product data

General Information	
CE mark	CE mark
Glare shielding accessories	SK [Skirt]
Material	Polyamide
Accessory colour	Black
Product Family Code	ST640Z [ProAir Accessories]

Product Data	
Full product code	871869625986300

Order product name	ST640Z SK BK
EAN/UPC – product	8718696259863
Order code	25986300
Numerator – quantity per pack	1
Numerator – packs per outer box	1
Material no. (12NC)	910500456881
Net weight (piece)	0.115 kg

ProAir

Dimensional drawing

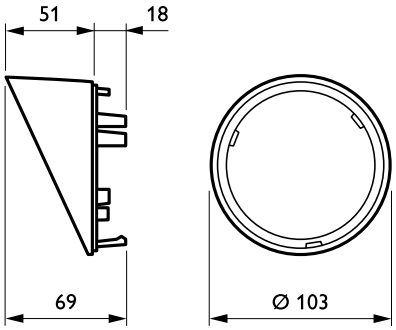

ProAir acc. ST640Z

© 2018 Signify Holding All rights reserved. Signify does not give any representation or warranty as to the accuracy or completeness of the information included herein and shall not be liable for any action in reliance thereon. The information presented in this document is not intended as any commercial offer and does not form part of any quotation or contract, unless otherwise agreed by Signify. Philips and the Philips Shield Emblem are registered trademarks of Koninklijke Philips N.V.