

ProAir

ST640Z HC

Honeycomb louvre

Store designers want a spot that fits in with their store design. Visual merchandisers need the very best light quality and spots that are easily adjustable. And maintenance managers and green champions want to reduce energy consumption and maintenance costs. ProAir offers store designers a LED spot with an elegant and compact design that they can customise to suit their needs. It gives visual merchandisers great rendering of colours and whites and excellent colour consistency, as well as well-defined, clean beams for maximum impact. What's more, a dedicated accessory makes it possible to aim the spot from the floor, for added convenience. And the high-efficiency versions of ProAir offer low maintenance and energy consumption.

Product data

General Information	
CE mark	CE mark
Glare shielding accessories	HC [Honeycomb louvre]
Material	Polyamide
Accessory colour	Black
Product Family Code	ST640Z [ProAir Accessories]

Product Data	
Full product code	871869625987000

Order product name	ST640Z HC
EAN/UPC – product	8718696259870
Order code	25987000
Numerator – quantity per pack	1
Numerator – packs per outer box	1
Material no. (12NC)	910500456882
Net weight (piece)	0.115 kg

Dimensional drawing

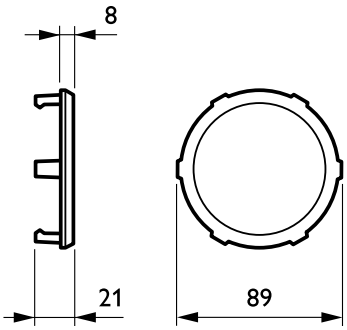

ProAir acc. ST640Z

Photometric data

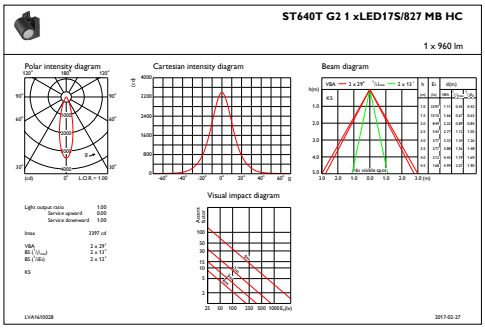

IFAS1_ST640TG21xLED17S827MBHC

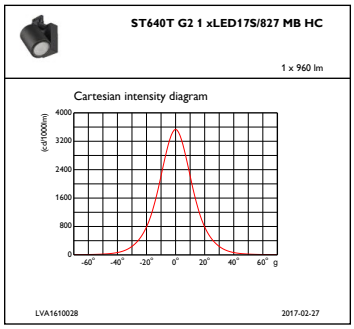

IFCC1_ST640TG21xLED17S827MBHC

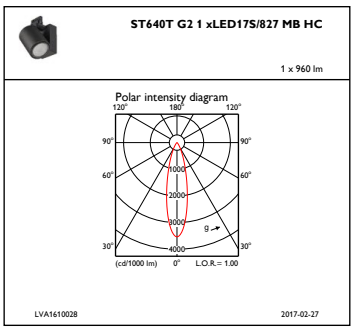

IFPC1_ST640TG21xLED17S827MBHC

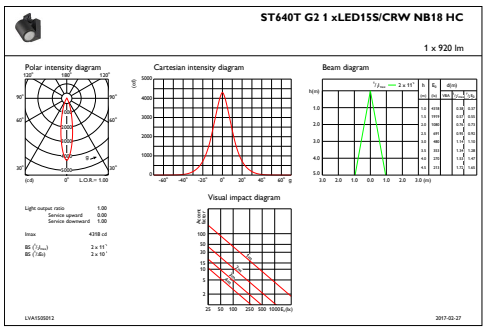

IFAS1_ST640TG21xLED15SCRWNB18HC

Photometric data

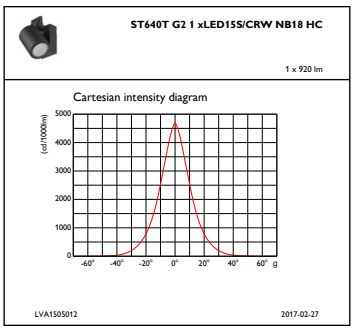

IFCC1_ST640TG21xLED15SCRWNB18HC

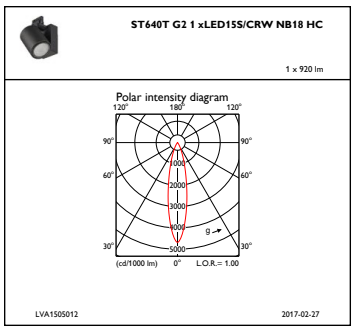

IFPC1_ST640TG21xLED15SCRWNB18HC

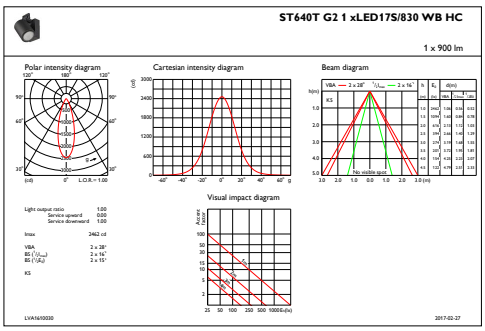

IFAS1_ST640TG21xLED17S830WBHC

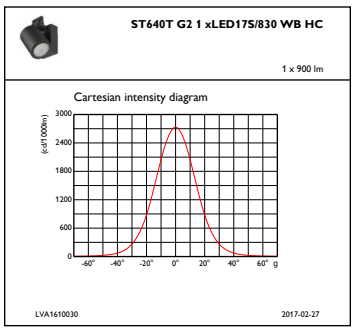

IFCC1_ST640TG21xLED17S830WBHC

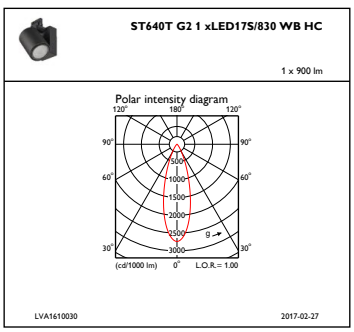

IFPC1_ST640TG21xLED17S830WBHC

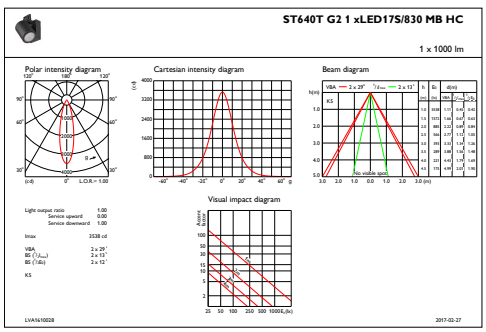

IFAS1_ST640TG21xLED17S830MBHC

Photometric data

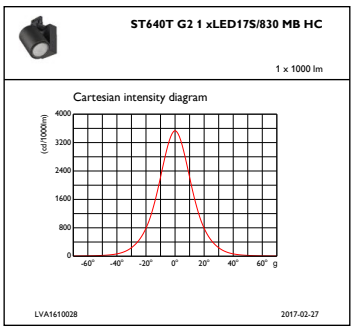

IFCC1_ST640TG21xLED17S830MBHC

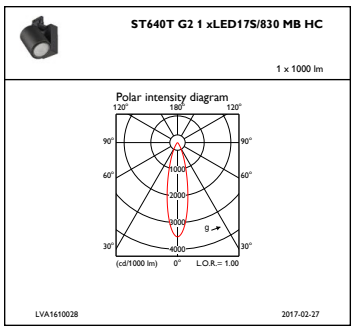

IFPC1_ST640TG21xLED17S830MBHC

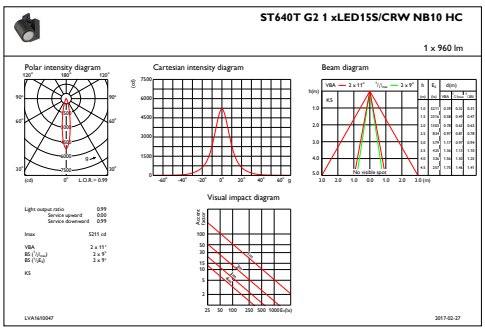

IFAS1_ST640TG21xLED15SCRWNB10HC

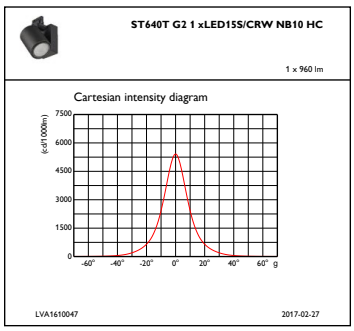

IFCC1_ST640TG21xLED15SCRWNB10HC

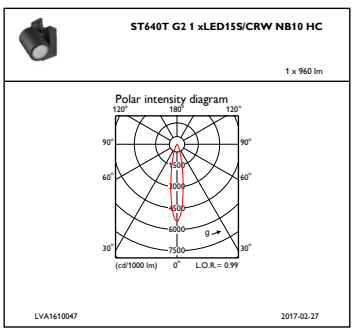

IFPC1_ST640TG21xLED15SCRWNB10HC

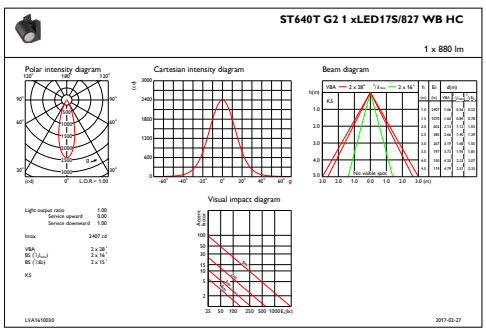

IFAS1_ST640TG21xLED17S827WBHC

Photometric data

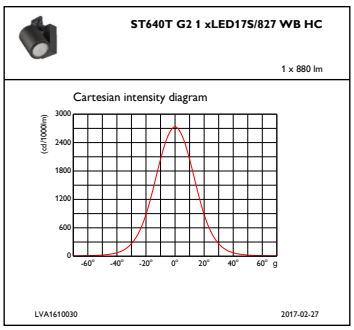

IFCC1_ST640TG21xLED17S827WBHC

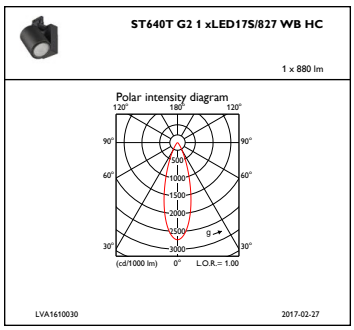

IFPC1_ST640TG21xLED17S827WBHC

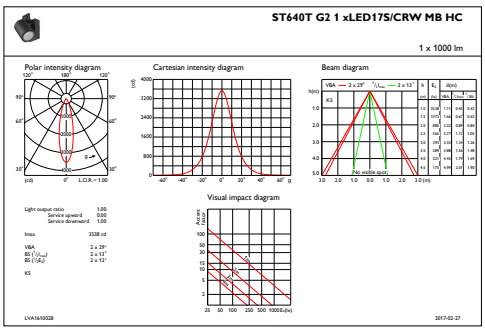

IFAS1_ST640TG21xLED17SCRWMBHC

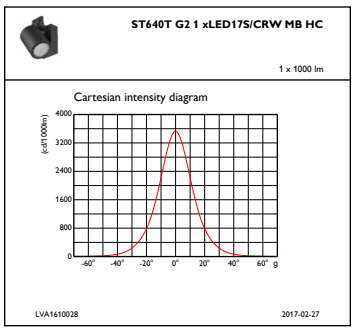

IFCC1_ST640TG21xLED17SCRWMBHC

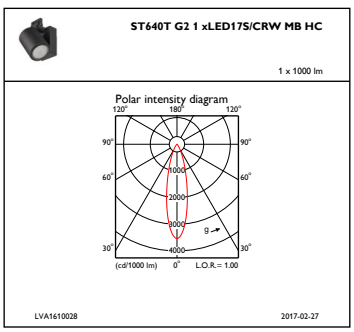

IFPC1_ST640TG21xLED17SCRWMBHC

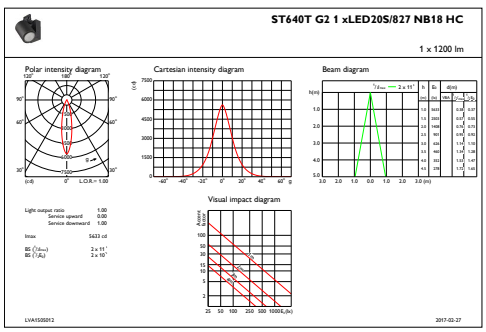

IFAS1_ST640TG21xLED20S827NB18HC

Photometric data

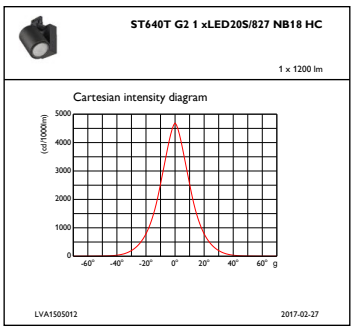

IFCC1_ST640TG21xLED20S827NB18HC

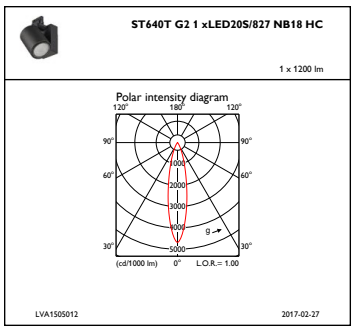

IFPC1_ST640TG21xLED20S827NB18HC

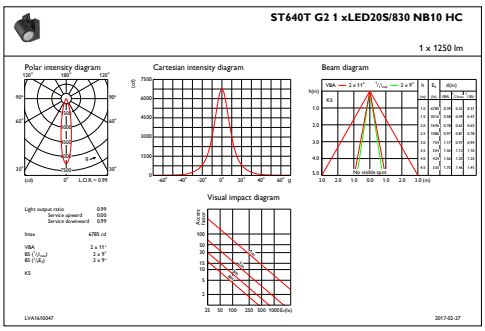

IFAS1_ST640TG21xLED20S830NB10HC

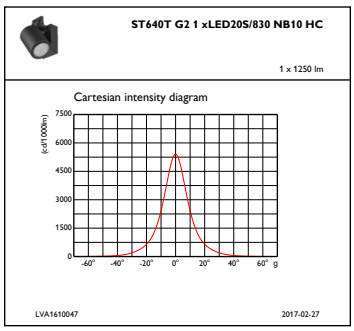

IFCC1_ST640TG21xLED20S830NB10HC

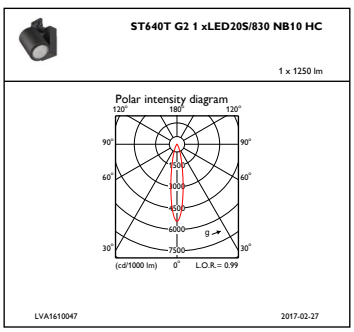

IFPC1_ST640TG21xLED20S830NB10HC

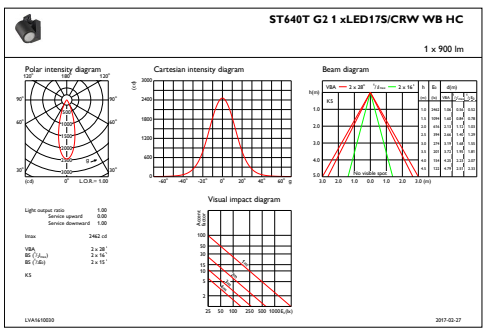

IFAS1_ST640TG21xLED17SCRWWBHC

Photometric data

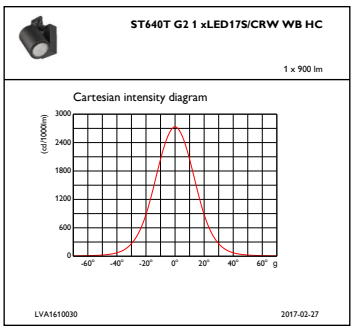

IFCC1_ST640TG21xLED17SCRWWBHC

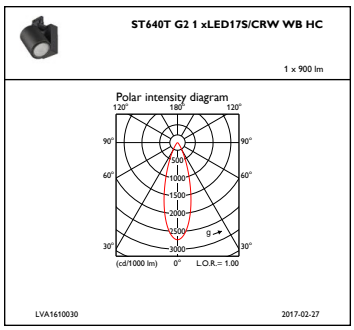

IFPC1_ST640TG21xLED17SCRWWBHC

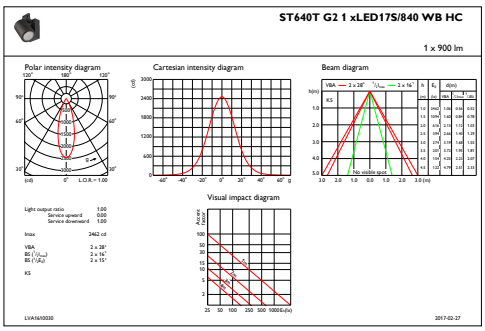

IFAS1_ST640TG21xLED17S840WBHC

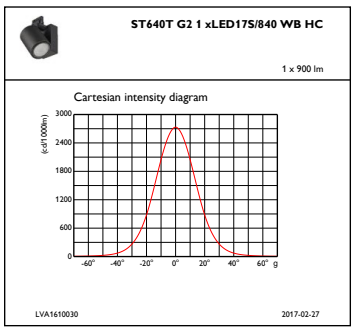

IFCC1_ST640TG21xLED17S840WBHC

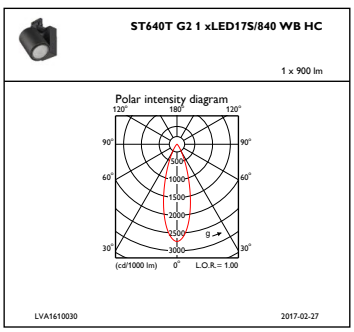

IFPC1_ST640TG21xLED17S840WBHC

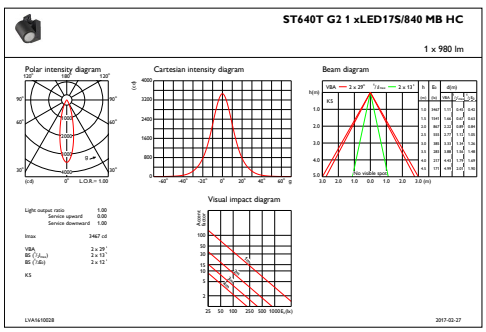

IFAS1_ST640TG21xLED17S840MBHC

Photometric data

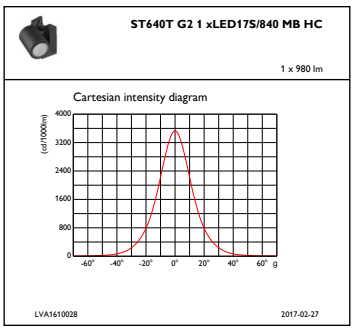

IFCC1_ST640TG21xLED17S840MBHC

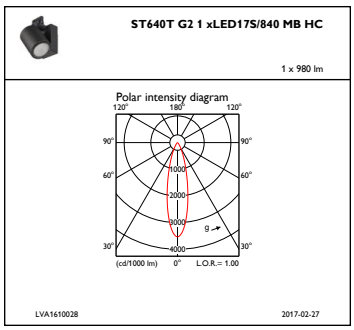

IFPC1_ST640TG21xLED17S840MBHC

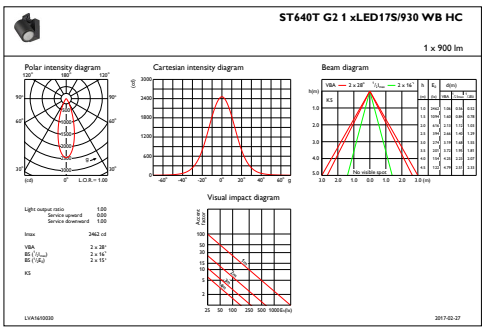

IFAS1_ST640TG21xLED17S930WBHC

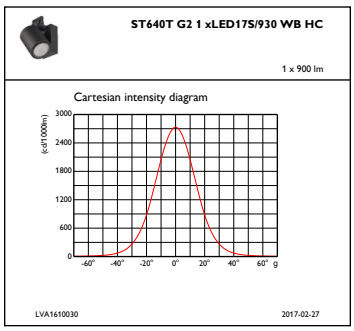

IFCC1_ST640TG21xLED17S930WBHC

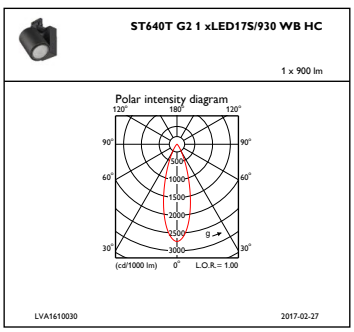

IFPC1_ST640TG21xLED17S930WBHC

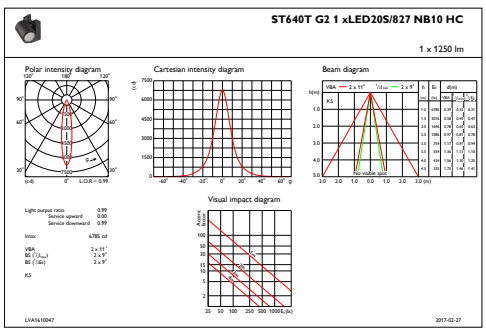

IFAS1_ST640TG21xLED20S827NB10HC

Photometric data

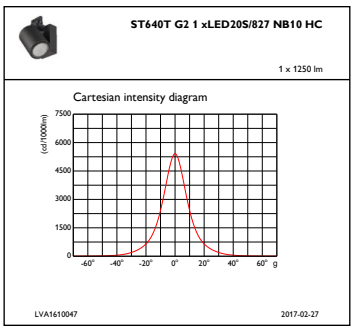

IFCC1_ST640TG21xLED20S827NB10HC

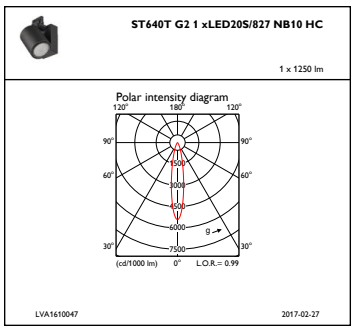

IFPC1_ST640TG21xLED20S827NB10HC

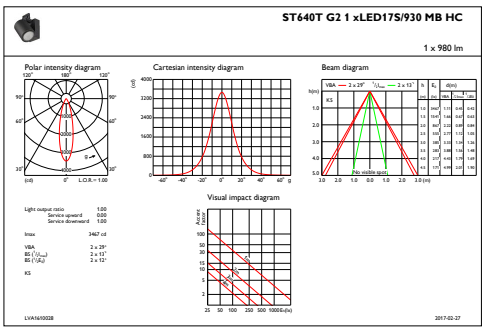

IFAS1_ST640TG21xLED17S930MBHC

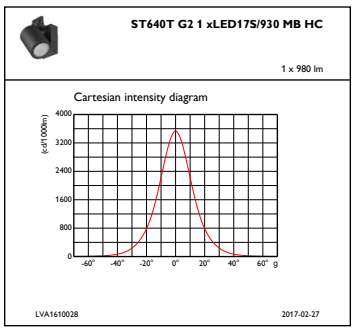

IFCC1_ST640TG21xLED17S930MBHC

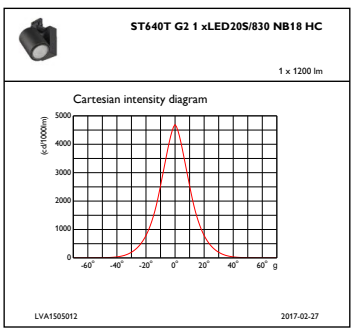

IFCC1_ST640TG21xLED20S830NB18HC

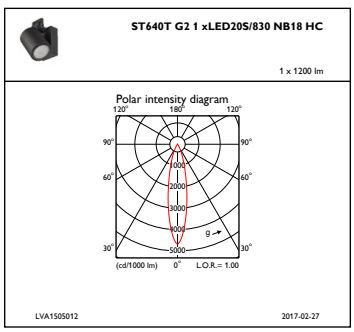

IFPC1_ST640TG21xLED20S830NB18HC

Photometric data

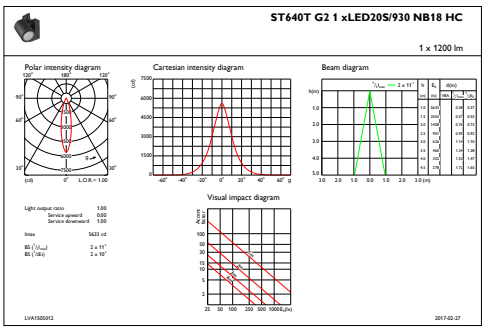

IFAS1_ST640TG21xLED20S930NB18HC

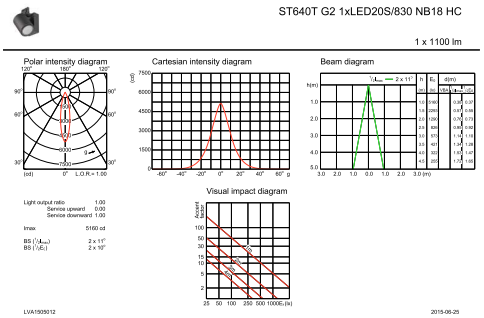

IFAS1_ST640T G2 1xLED20S830 NB18 HC.EPS

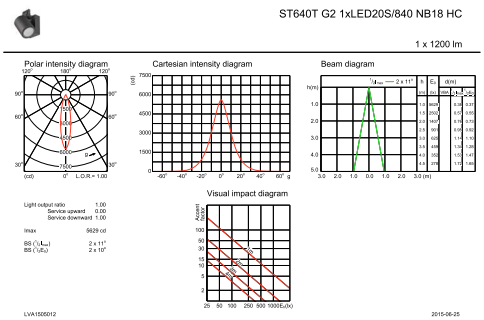

IFAS1_ST640T G2 1xLED20S840 NB18 HC.EPS

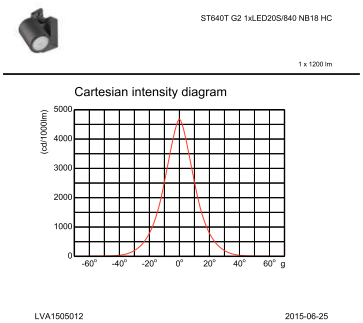

IFCC1_ST640T G2 1xLED20S840 NB18 HC.EPS

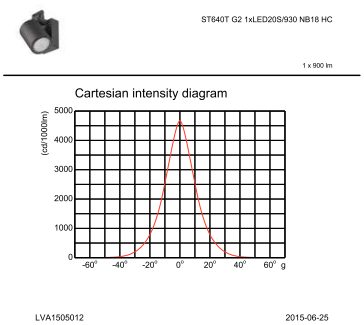

IFCC1_ST640T G2 1xLED20S930 NB18 HC.EPS



© 2018 Signify Holding All rights reserved. Signify does not give any representation or warranty as to the accuracy or completeness of the information included herein and shall not be liable for any action in reliance thereon. The information presented in this document is not intended as any commercial offer and does not form part of any quotation or contract, unless otherwise agreed by Signify. Philips and the Philips Shield Emblem are registered trademarks of Koninklijke Philips N.V.

www.lighting.philips.com
2018, December 4 - data subject to change