AMW 731/WH

12NC: 858773129940

EAN code: 8003437395147

SENSING THE DIFFERENCE



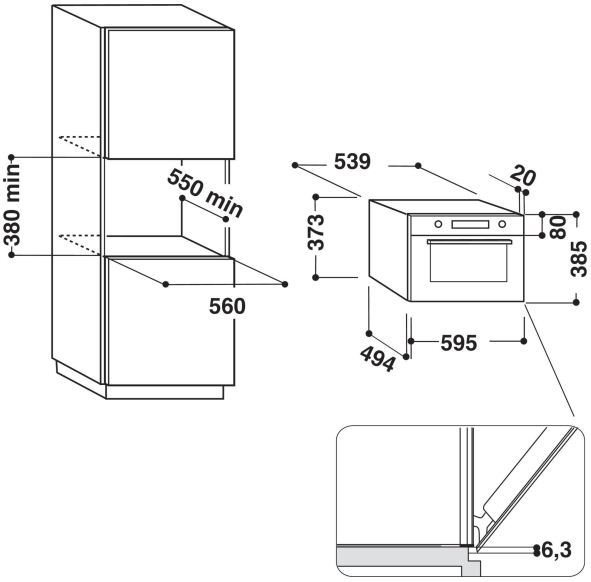

MAIN FEATURES

Product group	Microwave
Commercial code	AMW 731/WH
Main colour of product	White
Type of micro-wave oven	MW+Grill function
Construction type	Built-in
Type of control	Electronic
Type of control setting and signalling devices	LCD
Additional cooking method Grill	Yes
Crisp	Yes
Steam	No
Additional cooking method Fan cooking	No
Clock	Yes
Automatic programmes	Yes
Height of the product	385
Width of the product	595
Depth of the product	468
Minimum niche height	380
Minimum niche width	556
Niche depth	550
Net weight (kg)	27
Cavity capacity (l)	31
Turntable	Yes
Turntable diameter (mm)	325
Integrated Cleaning system	No

TECHNICAL FEATURES

Current (A)	10
Voltage (V)	230
Frequency (Hz)	50
Length of Electrical Supply Cord (cm)	135
Plug type	No
Timer	No
Grill power (W)	800
Type of grill	Quartz
Cavity material	Stainless steel
Interior light	Yes
Additional cooking method Grill	Yes
Position of interior lights	Right side

ENERGY LABEL

6th Sense / Dynamic Intelligence	6th Sense
Number of power levels	8
Maximum micro-wave power (W)	1000
Bread defrost	No
Jet defrost	Yes
Jet start	Yes