FA2 844 P IX HA

12NC: 859991001240

EAN code: 8050147001240



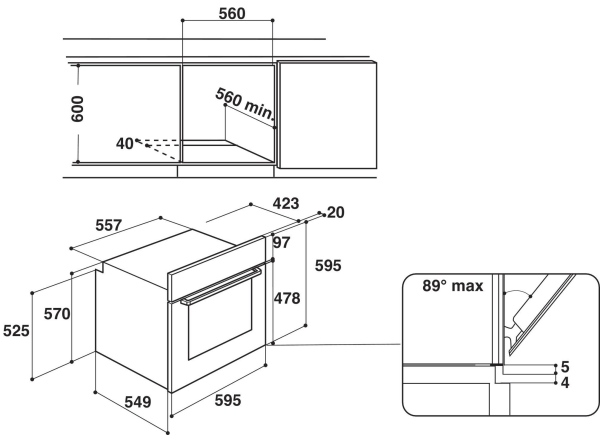

MAIN FEATURES

Product group	Oven
Commercial code	FA2 844 P IX HA
Main colour of product	Inox
Construction type	Built-in
Type of control	Electronic
Type of control setting and signalling devices	-
Are any hobs controls integrated?	No
Which kind of hobs can be controlled?	-
Automatic programmes	Yes
Current (A)	16
Voltage (V)	220-240
Frequency (Hz)	50-60
Length of Electrical Supply Cord (cm)	100
Plug type	No
Depth with open door 90 degree (mm)	-
Height of the product	595
Width of the product	595
Depth of the product	551
Minimum niche height	0
Minimum niche width	0
Niche depth	0
Net weight (kg)	27.10
Usable volume (of cavity)	-
Noise level (dB(A) re 1 pW)	-
Integrated Cleaning system	-
Grids	-
Trays	-

TECHNICAL FEATURES

Timer	Programmable
Time control	-
Time-setting options	-
Safety device	-
Interior light	Yes
Number of interior lights	-
Position of interior lights	-
Oven guides	-
Probe	-

PERFORMANCES

Energy input	Electric
Type of energy	-
Energy efficiency class - cavity 1	-
Energy consumption conventional (kWh)	-
Energy consumption forced air convection (kWh)	-