ACM 680/NE/WH

12NC: 859991014580

GTIN (EAN) code: 8003437832574

SENSING THE DIFFERENCE

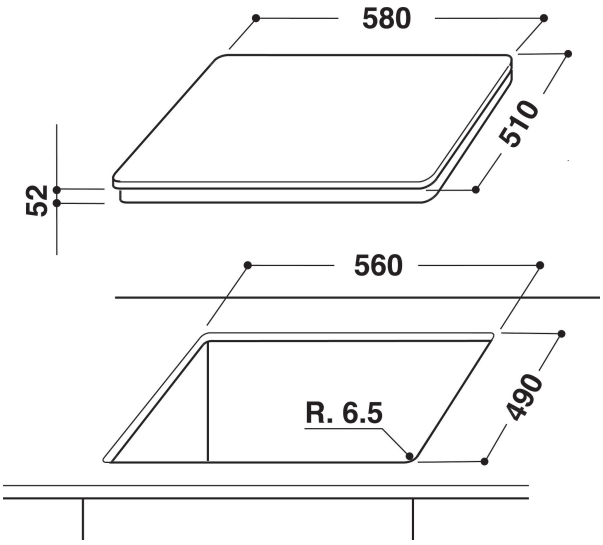

MAIN FEATURES

Product group	Hob
Construction type	Built-in
Type of control	Electronic
Type of control settings	-
Number of gas burners	0
Number of electric cooking zones	3
Number of electric plates	0
Number of radiant plates	0
Number of halogen plates	0
Number of induction plates	3
Number of electric warming zones	0
Location of control panel	Front
Basic surface material	Glass
Main colour of product	White
Electrical connection rating (W)	7000
Gas connection rating (W)	0
Current (A)	30,4
Voltage (V)	230
Frequency (Hz)	50/60
Length of Electrical Supply Cord (cm)	150
Plug type	No
Gas connection	N/A
Width of the product	580
Height of the product	56
Depth of the product	510
Minimum niche height	30
Minimum niche width	560
Niche depth	490
Net weight (kg)	12.5
Automatic programmes	No

TECHNICAL FEATURES

Power on indicator	Yes
Number of indicators	3
Type of regulation	Inductor
Type of lid	Without
Residual heat indicator	Separate
Main on/off switch	Yes
Safety device	-
Timer	Yes

PERFORMANCES

Energy input	Electric