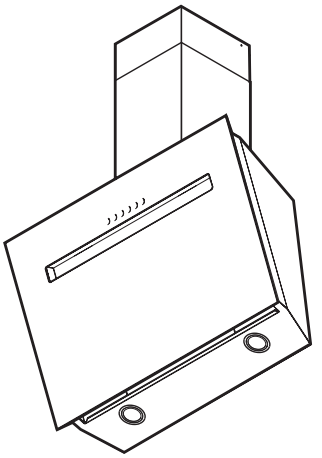

EN User and maintenance manual

IMPORTANT SAFETY INSTRUCTIONS

These instructions are also available on the website: docs.whirlpool.eu

YOUR SAFETY AND THAT OF OTHERS IS PARAMOUNT.

This manual and the appliance itself provide important safety warnings that must be read and heeded at all times.

⚠ This is the safety warning symbol, which alerts users to potential hazards to themselves and others.

All safety messages are preceded by the warning symbol and the following words:

⚠ DANGER **indicates a hazardous situation which, if not avoided, will cause serious injury.**

⚠ WARNING **indicates a hazardous situation which, if not avoided, could cause serious injury.**

All safety messages indicate the nature of the potential hazard/warning and how to reduce the risk of injury, harm and electric shock resulting from improper use of the appliance. Always comply with the following instructions:

- Installation and maintenance must be carried out by a qualified technician, in compliance with the manufacturer's instructions and the local safety regulations. Do not repair or replace any part of the appliance unless specifically stated in the user manual.
- The appliance must be disconnected from the mains before carrying out any kind of installation work.
- It is compulsory to earth the appliance (however, it is not necessary for class II hoods identified by the ⧈ symbol on the specifications label).
- The power cable must be long enough to connect the appliance to the power supply socket.
- Do not pull on the power cable to unplug the appliance.
- After installation, the electrical components must not be accessible to the user.
- Do not touch the appliance with wet hands and do not operate it when barefoot.
- This appliance may not be used by children (aged 8 and above), persons with any physical, sensory or mental impairment, or persons lacking experience or knowledge of the appliance, unless they are supervised or given instruction on how to use it safely and are made aware of the hazards its use might entail. Children must not play with the appliance. Cleaning and user maintenance must not be carried out by children unless they are under adult supervision.
- Do not repair or replace any part of the appliance unless specifically recommended in the manual. Any defective parts must be replaced with original spare parts. All other maintenance work must be carried out by a qualified technician.
- Children must be supervised to ensure that they do not play with the appliance.
- When drilling holes into the wall or ceiling, take care not to damage any electrical wiring and/or pipework.
- Ventilation ducts must always discharge exhaust air to the outside.
- Exhaust air must not be discharged through a flue used for extracting fumes produced by gas-burning or any other fuel-burning appliances; it must have a separate outlet. All national exhaust air regulations must be observed.

- If the hood is used at the same time as other appliances that use gas or other fuels, the negative pressure of the room must not exceed 4 Pa (4 x 10^{-5} bar). Please ensure, therefore, that the room is adequately ventilated.
- The manufacturer does not accept any liability for inappropriate use of the appliance or for incorrect setting of the controls.
- Regular maintenance and cleaning ensure that the appliance works correctly and achieves optimum performance. Regularly clean all stubborn surface dirt, to avoid a build-up of grease. Regularly remove and then clean or replace the filters.
- Failure to observe the instructions for cleaning the hood and cleaning and replacing the filters may result in a fire.
- The extractor hood must never be opened without the grease filters fitted and should be regularly monitored.
- When using the extractor hood above a gas appliance, ensure that any burners in use are covered by a pan.
- If three or more gas cooking zones are in use, the hood should be set at power setting 2 or higher. This prevents the build-up of excess heat in the appliance.
- Before touching any lamps, ensure that they are cold.
- The hood must not be used or left without properly fitted lamps, as this may cause electric shock.
- Wear protective gloves when carrying out any installation and maintenance work.
- This product is not suitable for outdoor use.
- When the hob is in use, accessible parts of the hood may become hot.

KEEP THESE INSTRUCTIONS

Declaration of Conformity CE

- This product has been designed, manufactured and marketed in compliance with:
  - the ecodesign requirements of European Regulations n. 66/2014, n. 327/2011, n. 244/2009, n. 245/2009, n. 1194/2012, n. 2015/1428.

The appliance's electrical safety can only be guaranteed if it is correctly connected to an approved earthing system.

Energy saving tips

- Switch on the hood at the lowest speed setting when you start cooking and allow it to run for a few minutes after you have finished cooking.
- Only increase the speed if there is a lot of smoke or steam and only use the "Boost" setting(s) in extreme situations.
- Replace the carbon filter(s) when necessary, to maintain efficient odour reduction.
- Clean the grease filter(s) when necessary, to maintain efficiency.
- Use a pipe with the maximum diameter specified in this manual, to optimise efficiency and reduce noise levels to a minimum.

INSTALLATION

After unpacking the appliance, check that it has not been damaged in transit. In the event of problems, contact the dealer or your nearest After-sales Service. To prevent any damage, only remove the appliance from its polystyrene base at the time of installation.

PREPARING FOR INSTALLATION

⚠ WARNING **this appliance is heavy; the hood must be lifted and installed by two or more people.**

The minimum distance between the pan support on the hob and the bottom of the hood must be no less than 40 cm for electric hobs and 65 cm for gas or mixed hobs.
Before installation, also check the minimum distances specified in the hob manual.
If the installation instructions for the hob specify a greater distance between the hob and the hood, this distance must be observed.

ELECTRICAL CONNECTION

Check that the voltage specified on the appliance identification plate is the same as the mains voltage.
This information is found on the inside of the hood, under the grease filter.
The power cable (type H05 VV-F 3 x 0.75 mm^2) must only be replaced by an authorised electrician. Contact an authorised Service Centre.
If the hood is fitted with an electric plug, connect the appliance to a socket which complies with current regulations and which is in an accessible location. If no plug is fitted (direct wiring to the mains), or if the socket is not in an accessible location, install a standardised two-pole circuit breaker that will allow complete isolation from the mains in the event of category III overvoltage, in compliance with the wiring regulations.
If the cable is not fitted with a plug, connect the wires according to the following table:

Mains voltage and frequency	Wire connection
220-240 V – 50 Hz	⏚ : yellow/green **N** : blue **L** : brown

GENERAL RECOMMENDATIONS

Before use
Remove any protective cardboard, transparent film and adhesive labels from the accessories. Check whether the appliance has been damaged in transit.

During use
Do not place heavy items on the appliance as this may cause damage. Do not expose the appliance to atmospheric agents.

SAFEGUARDING THE ENVIRONMENT

Disposing of packaging material

The packaging material is 100% recyclable and is marked with the recycling symbol (♺). Do not dispose of the various packaging carelessly, but do so responsibly and in full compliance with local authority regulations governing waste disposal.

Scrapping the product

- This appliance is marked in compliance with European Directive 2012/19/EU on Waste Electrical and Electronic Equipment (WEEE).
- By ensuring that this product is disposed of correctly, you will help prevent potentially negative consequences for the environment and human health.
- The symbol on the product or on the accompanying documentation indicates that it should not be treated as domestic waste but must be taken to an appropriate collection centre for the recycling of electrical and electronic equipment.

Scrapping household appliances

- This appliance is manufactured using recyclable or reusable materials. Scrap the appliance in accordance with local regulations on waste disposal. Before scrapping, cut off the power cable so that the appliance cannot be connected to the mains.
- For further information on the treatment, recovery and recycling of household appliances, contact the competent local authority, the domestic waste collection service or the shop where you purchased the product.

TROUBLESHOOTING GUIDE

The appliance does not work:

- Check the mains voltage and whether the appliance is connected to the power supply;
- switch the appliance off and on again to see if the fault persists.

The hood is not extracting air sufficiently:

- Check that the air extraction speed is set to the desired level;
- Check that the filters are clean;
- Check the air vents for any obstructions.

The lamp does not work:

- Check the bulb and replace if necessary;
- Check that the bulb has been fitted correctly.

AFTER-SALES SERVICE

Before calling the After-sales Service:

1. Check whether you can solve the problem yourself by following the suggestions given in the "Troubleshooting guide".
2. Switch the appliance off and on again to see if the fault persists.

If the fault persists after carrying out the above checks, contact the nearest After-sales Service.

Always provide:

- A brief description of the fault;
- The type and exact model of the appliance;
- The Service number (the number after the word "SERVICE" on the identification plate), located on the inside of the appliance. The Service number is also stated in the warranty booklet;
- Your full address;
- Your telephone number;

SERVICE 0000 000 00000

If any repairs are required, please contact an authorised After-sales Service Centre (to ensure that original spare parts are used and repairs are carried out correctly).

CLEANING

⚠ WARNING

-Do not use steam-cleaning equipment.
- Disconnect the appliance from the mains.

IMPORTANT: Do not use corrosive or abrasive detergents. If any such products unintentionally come into contact with the appliance, clean the appliance immediately with a damp cloth.

- Clean the surfaces with a damp cloth. If it is very dirty, add a few drops of washing-up detergent to the water. Finish off with a dry cloth.

IMPORTANT: Do not use abrasive sponges or metallic scrapers or scourers. Over time, these can ruin the enamel surfaces.

- Use detergents specifically designed for cleaning the appliance and follow the manufacturer's instructions.

IMPORTANT: Clean the filters at least once a month to remove oil and grease residue.

MAINTENANCE

⚠ WARNING

-Wear protective gloves.
- Disconnect the appliance from the mains.

GREASE FILTERS
The metal grease filter has an unlimited service life and must be washed once a month by hand or in a dishwasher at low temperatures on a short cycle. Cleaning in a dishwasher may cause discolouration of the grease filter, but its filtering efficiency is unaffected.
Open the extractor panel (turn upwards).

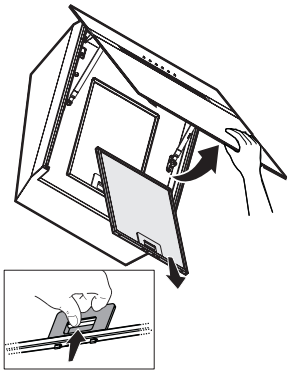

Please note: It is not necessary to remove the panel.
Pull out the handle to remove the filter.
Once the filter has been washed and left to dry, proceed in reverse order to refit the filter.

CARBON FILTER (for filtration models only)
This filter retains the unpleasant odours produced during cooking.
Replace the carbon filter every 4 months.

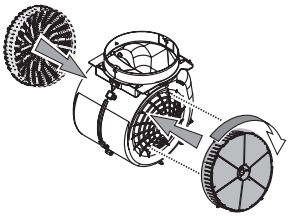

Fitting or replacing the carbon filter
1. Disconnect the hood from the mains.
2. Open and remove the extractor panel from its housing.
3. Remove the grease filters.
4. Fit one carbon filter on each side, covering both protective grilles for the motor impeller.
   Turn the filters clockwise to secure them to the central pins.

Proceed in reverse order to remove.
Refit the grease filters and extractor panel.

Maintenance of the condensation pan
The inspection window at the front of the condensation collection pan allows you to check if the pan is full, or being drained or cleaned.
In any event, the pan must be drained and cleaned AT LEAST once a week, or more frequently, based on the level of usage of the hood.
The pan can be cleaned by hand or in a dishwasher at low temperatures on a short cycle.

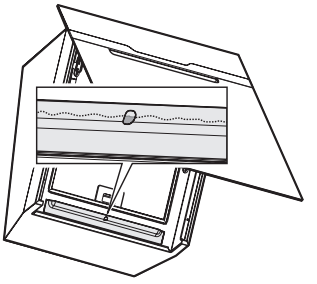

REPLACING THE LAMPS

The hood is equipped with an LED lighting system.
LEDs ensure excellent illumination, have a service life up to 10 times longer than traditional bulbs, and offer up to 90% energy savings.
To replace a lamp, proceed as follows:

1. Remove the grease filters.
2. Access the lamps from inside the hood.
3. Press the release clips to release the lamp.
4. Remove the lamp from the hood frame.
5. Disconnect the terminal.

Proceed in reverse order to fit the replacement lamp.
NB: To purchase an LED lamp, please contact the Technical After-sales Service Centre.

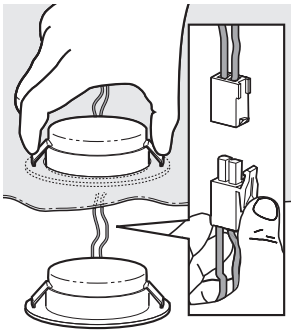

MATERIALS SUPPLIED

Remove all the components from the packages. Check that all the components are included.

- Assembled hood with motor, bulbs and grease filters fitted (1 or 2 grease filters depending on the model).
- Installation and operating instructions
- 1 x mounting template
- 1 x Torx T10 adapter
- 1 x Torx T20 adapter
- 1 x deflector
- 5 x wall plugs, dia. 8 mm
- 5 x screws dia. 5x45
- 3 x screws dia. 3.5x9.5
- 1 x washer dia. 5.3x2
- 1 x cable clamp
- Power cable
- 2 x deflectors
- 1 x telescopic chimney section
- 1 x chimney support bracket

INSTALLATION – PRELIMINARY FITTING INSTRUCTIONS

The hood is designed for installation in "filter mode".

Filter mode

The air is filtered as it passes through one or more carbon filters and is recycled back into the atmosphere.

IMPORTANT: Check that the air recirculation process runs smoothly.
If the hood does not have the carbon filter(s), order one/them and fit before use.

The hood must be fitted away from very dirty areas, windows, doors and sources of heat.
The hood comes with all the materials necessary for installation on the majority of walls/ceilings. However, a qualified technician must ensure that the materials are suitable for the type of wall/ceiling in question.

INSTALLATION DIMENSIONS

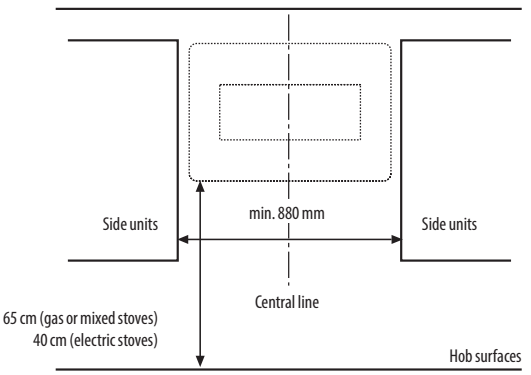

INSTALLATION – FITTING INSTRUCTIONS

The instructions below, to be carried out in the order in which they are numbered, refer to the drawings on the last few pages of this manual, which are marked with the corresponding numbers.

IMPORTANT: The hood is supplied in 'extractor mode'.

To use the hood in 'filter mode', the carbon filter must be purchased and fitted after installation.
For 'extractor mode' only: The hood is supplied with an upper exhaust outlet. If necessary, the outlet can be routed through the wall (see installation instructions).

1. Mark a vertical centre line on the wall, as far as the ceiling.
2. Place the drilling diagram against the wall (hold it in place with adhesive tape). The vertical centre line printed on the drilling diagram must match the centre line drawn on the wall.

Please note: The bottom edge of the drilling diagram corresponds to the bottom edge of the hood.

IMPORTANT: the bottom edge of the drilling diagram must be a minimum distance of 40 cm (for electric hobs) or 65 cm (for gas hobs) from the surface of the hob.

3. Drill the holes as indicated on the drawing.
4. **For 'extractor mode' only – rear outlet:** Make a hole in the wall for the exhaust pipe.
5. Remove the drilling diagram from the wall, insert the two wall plugs and two screws in the upper holes in the wall, making sure that they protrude by around 5 mm; insert the third wall plug in the bottom hole.
6. **If you want to install the chimney section:** Attach the chimney support bracket to the wall. Drill a hole and insert the wall plugs as shown. Fix the bracket in place.
7. **Only for 'filter mode' with chimney:** Fit the filter connector to the chimney support bracket.
8. **Only for 'filter mode' without chimney:** Fit the plastic grille to the air outlet hole on the hood.
9. **For 'extractor mode' only – upper outlet:** Install the non-return exhaust valve.
10. Open the panel and remove the grease filter.
11. **For 'extractor mode' only – rear outlet:** Remove the pre-fractured cap located on the back panel of the hood, taking care not to damage it.
12. **For 'extractor mode' only – rear outlet:** Remove the electronic box, unscrewing the two screws that fix it to the motor unit, and unhooking it from the pins on the opposite side (keep the screws).
13. **For 'extractor mode' only – rear outlet:** Remove the screws that fix the motor unit to the hood (keep the screws).
14. **For 'extractor mode' only – rear outlet:** Rotate the motor unit.
15. Fix the electronic box using the previously removed screws (see installation sequence 12).
16. **For 'extractor mode' only – rear outlet:** Fix the motor unit to the back panel of the hood using the previously removed screws (see installation sequence 13).
17. **For 'extractor mode' only – rear outlet:** Fit the previously removed cap (see installation sequence 11) using two screws, as shown.
18. Hook the rear holes in the hood over the retaining screws.
19. Insert the washer and safety screw in the lower hole. Secure the hood to the wall by tightening the two fixing screws.
20. **Insert the power cable in the appropriate slot. Secure the cable with the cable clamp.**

IMPORTANT: This action is compulsory. It will prevent accidental disconnection of the power cable.
Connect the appliance to the household mains.

21. Fit the carbon filters, covering the motor. Turn the filters to secure them to the central pins.
22. Re-fit the grease filters and close the panel.
23. **If you want to install the chimney section:** Rest the chimney on top of the hood, remove the top section and fix the chimney using two screws, as shown.

Check that the hood is working properly, referring to the section on the description and use of the hood.

DESCRIPTION AND USE OF THE HOOD

1. Control panel
2. Extractor panel
3. Grease filter (behind the panel)
4. LED lamps

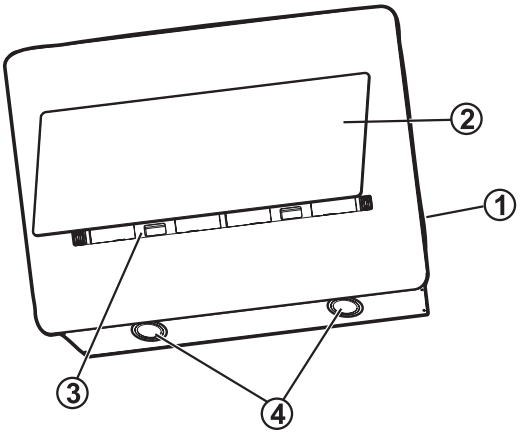

Control panel
For selecting hood functions with a simple tap of the command button.

AKR 809 MR – AKR 808 MR – AKR 809 UK MR



AKR 808 BK – AKR 808 UK BK



T1. Motor ON/OFF button (stand by) – **resets the filter saturation indicators**
T2. ON button – speed selection (extraction power) **for low speed**
T3. Speed selection button (extraction power) **for normal speed**
T4. Speed selection button (extraction power) **for high speed and Intensive setting.**
Press to activate high speed (extraction power).
Press again to activate the Intensive speed setting (extraction power) (button flashes for 5 minutes, after which it returns to normal speed (extraction power).
T5. "Anti-condensation function" ON/OFF button: Prevents condensation from forming on the surface of the hood. Activate as required.
"Automatic anti-condensation function": The hood activates this function each time the hood is switched on.
Automatic ON/OFF activation: With the hood switched off, press and hold the button (for around 3 seconds until a "beep" signal sounds) to activate or deactivate this function.
Please note: The anti-condensation function must only be activated when the motor is switched on.
Warning! Even if this function is never activated, carry out periodic maintenance of the condensation pan all the same, as indicated in the "Maintenance – Cleaning – Maintenance of the condensation pan" section.
T6. Light ON/OFF button.

Filter saturation indicators
At regular intervals, the hood signals the need to perform filter maintenance.
Please note: The indicators are activated when the hood is switched on.

Flashing **T2** button: Carry out maintenance on the grease filter.
Flashing **T3** button: Carry out maintenance of the active carbon filter.

Please note: The filter saturation signal is visible within the first minute after the hood has been switched off; after this time, the saturation indicators are reset.

Filter saturation indicator reset:
Please note: This action is carried out with the hood switched on.
Press and hold the T1 button.

Active carbon filter saturation indicator activated
Please note: This action is carried out with the hood switched off.
This indicator is usually deactivated; simultaneously press and hold the T2 and T3 buttons to activate the function: The T3 button lights up to indicate activation.
To deactivate the function, simultaneously press and hold the T2 and T3 buttons: The T3 button flashes briefly and then goes out to indicate deactivation.

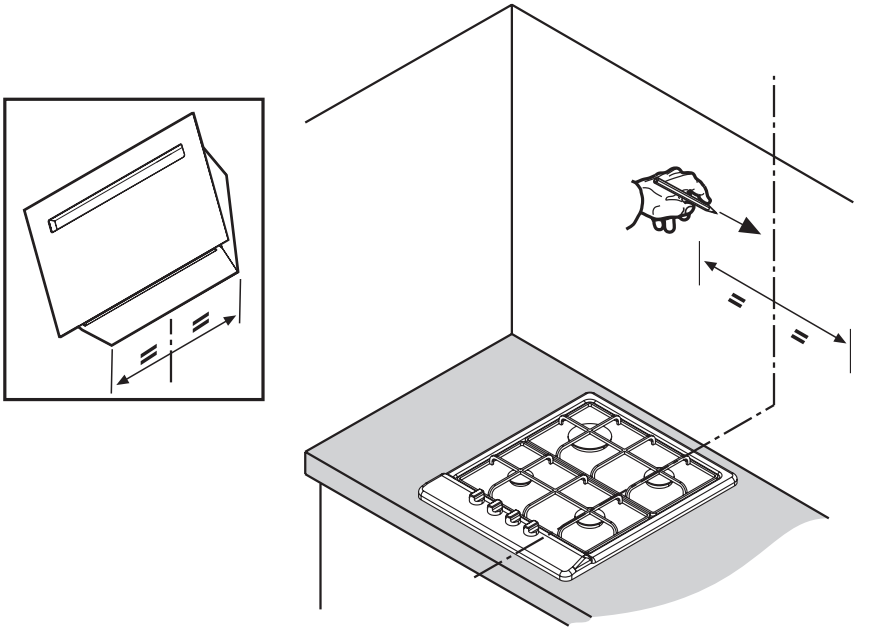

1

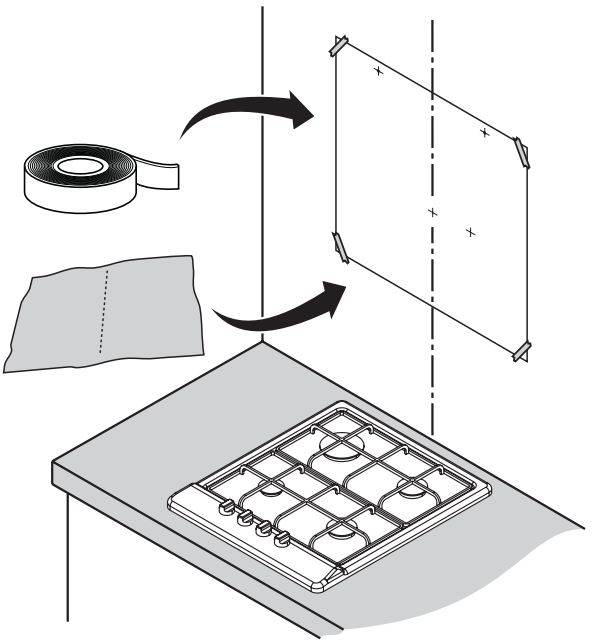

2

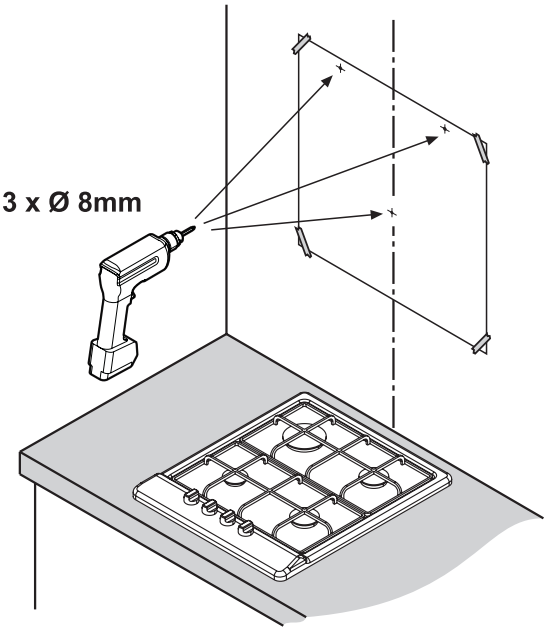

3

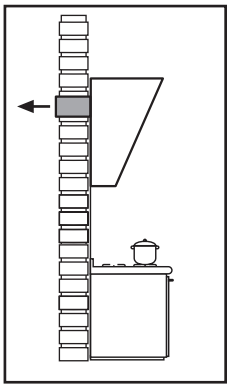

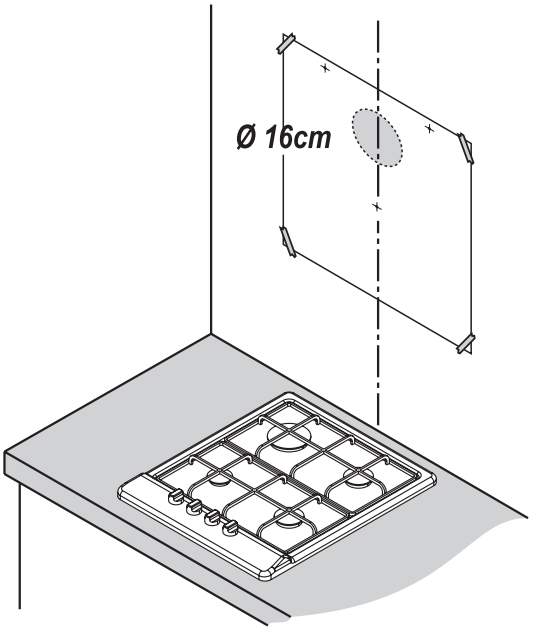

4

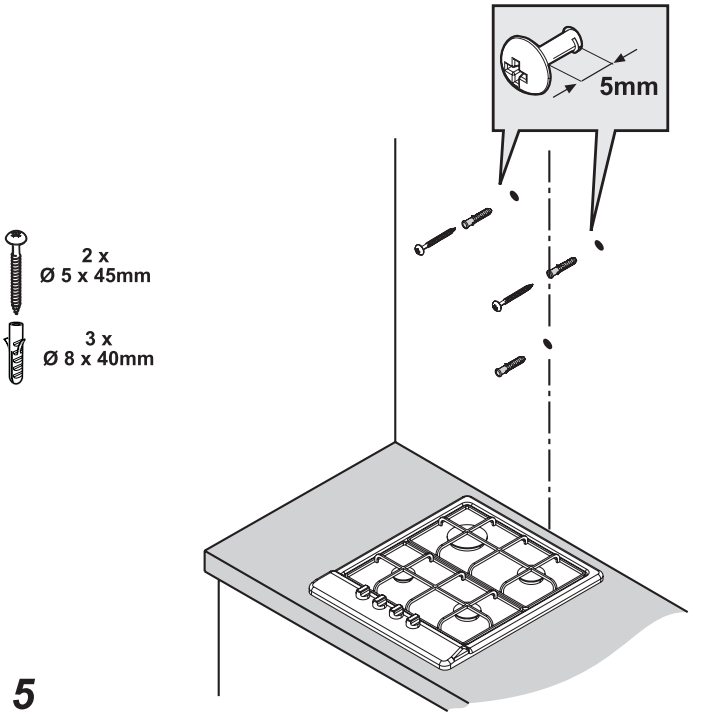

5

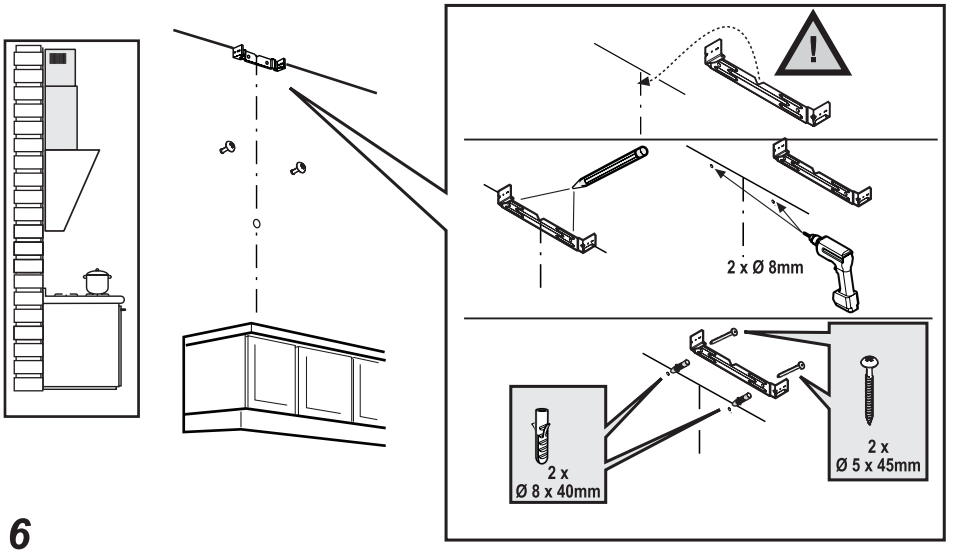

6

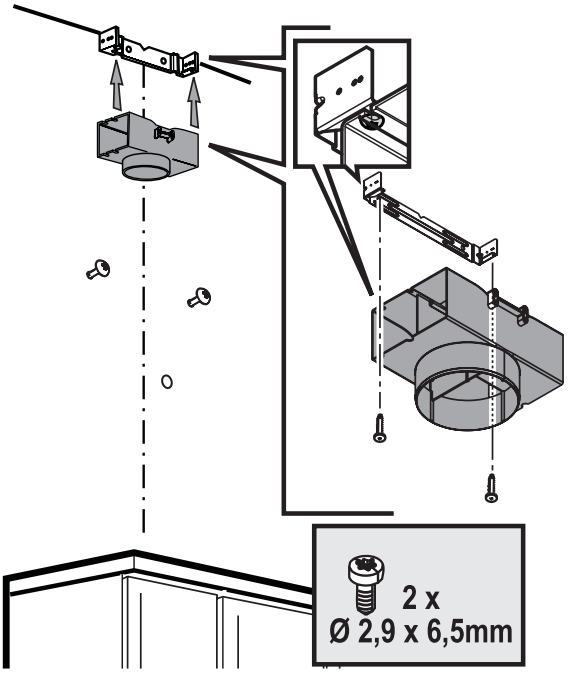

7

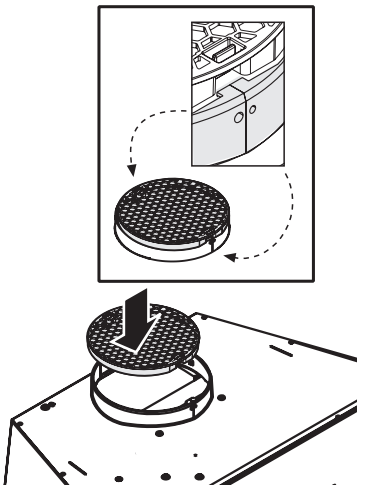

8

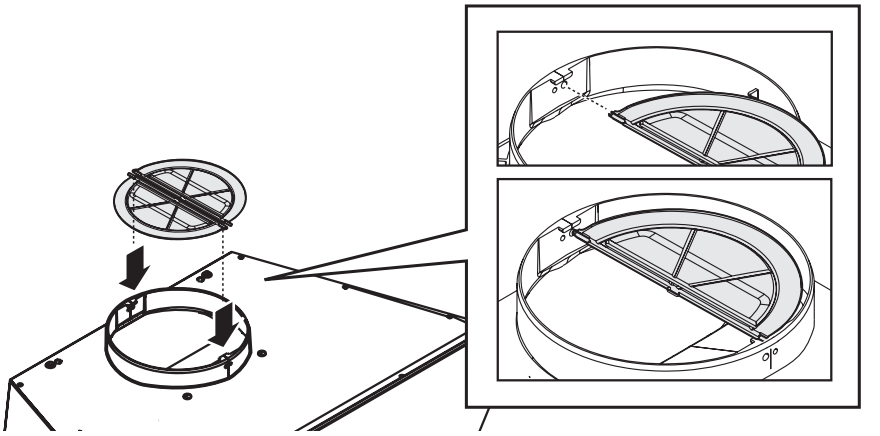

9

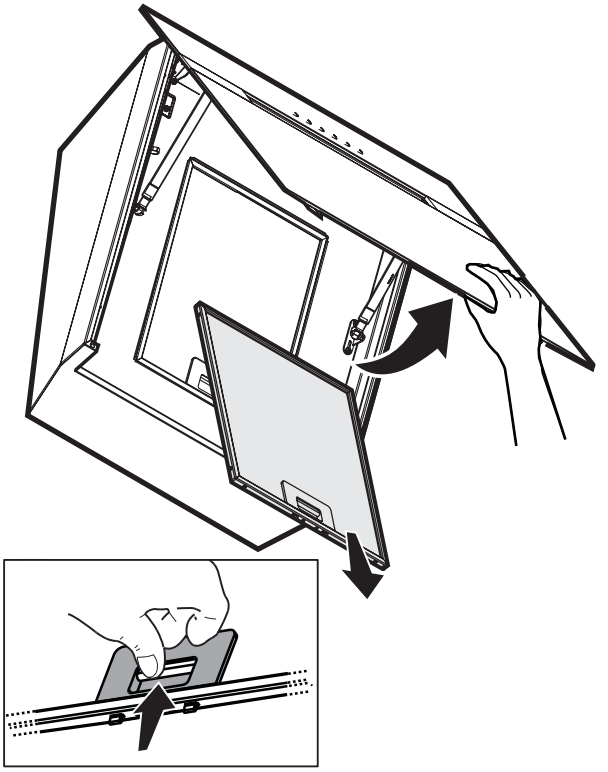

10

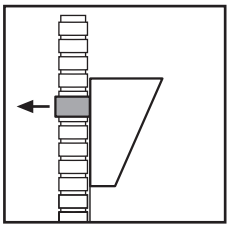

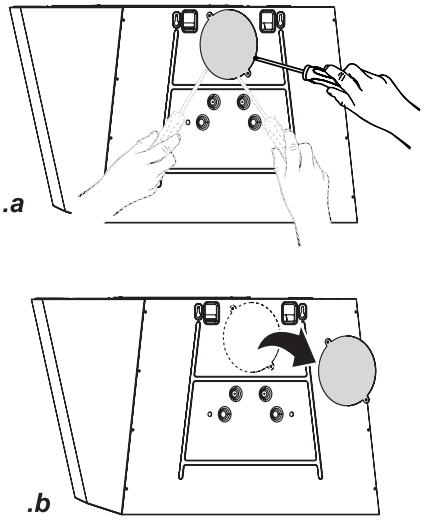

11

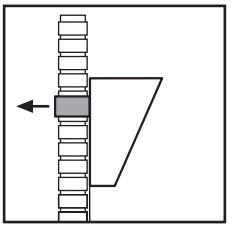

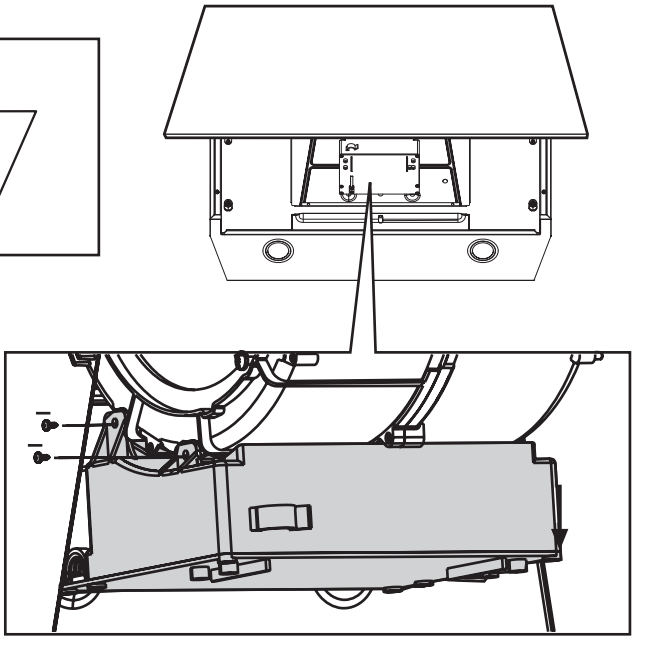

12

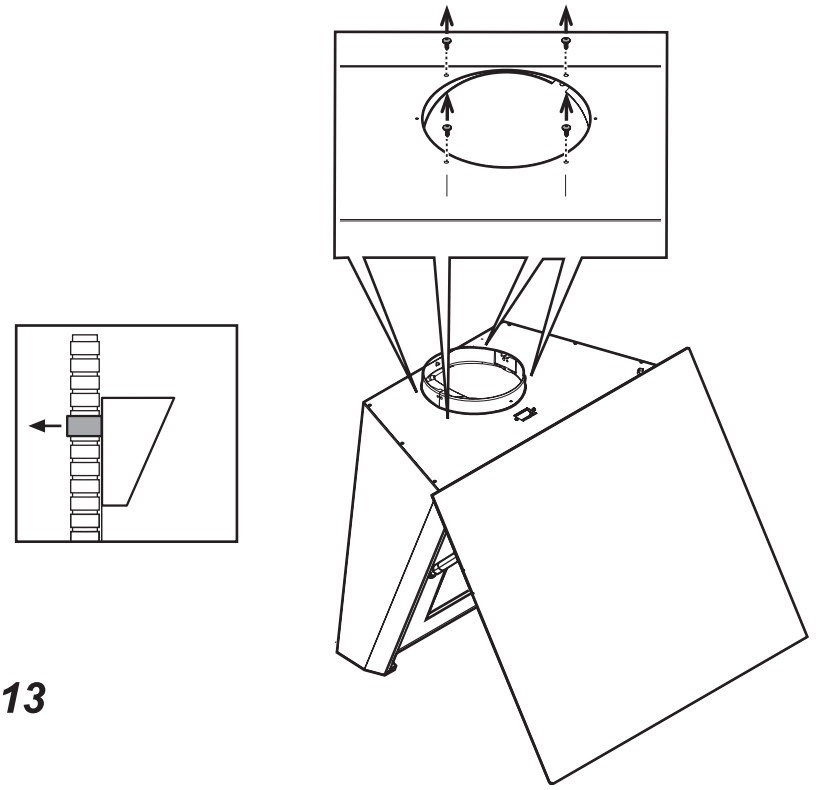

13

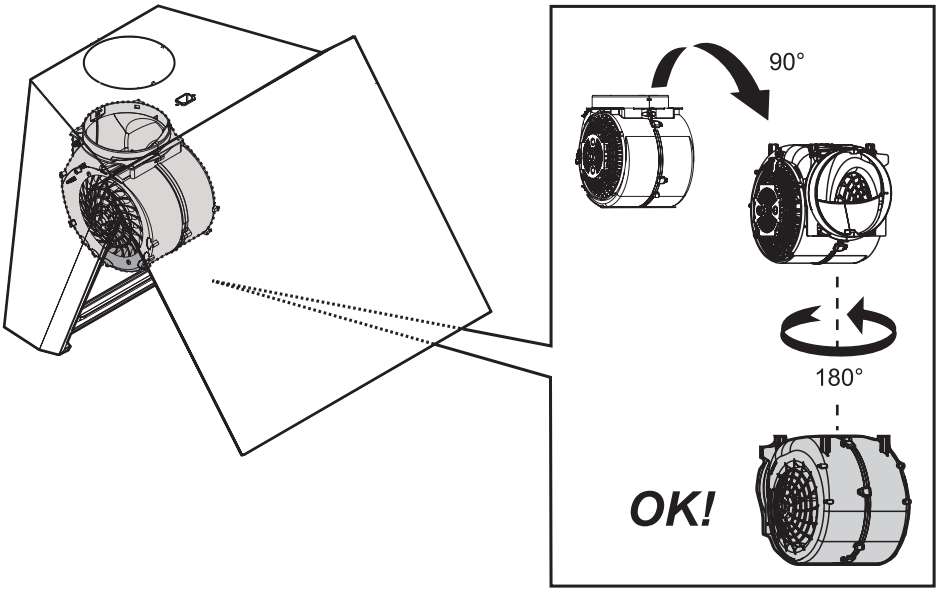

14

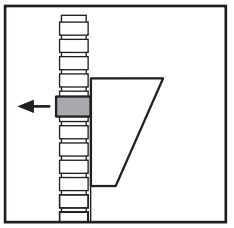

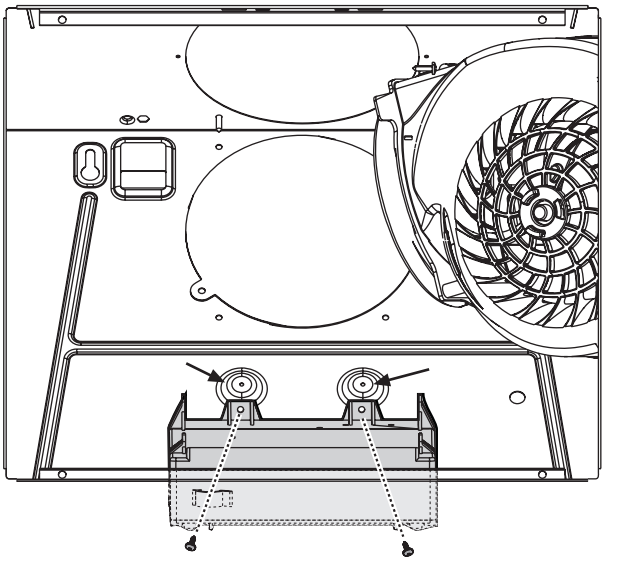

15

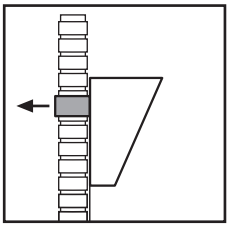

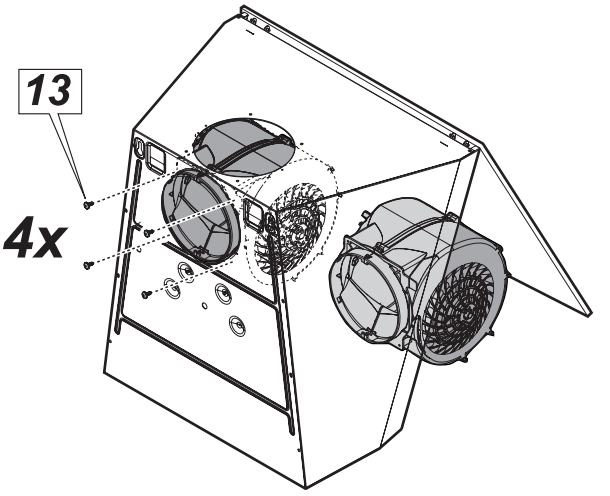

16

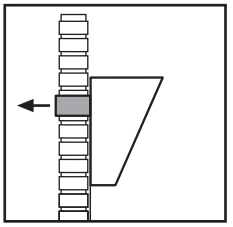

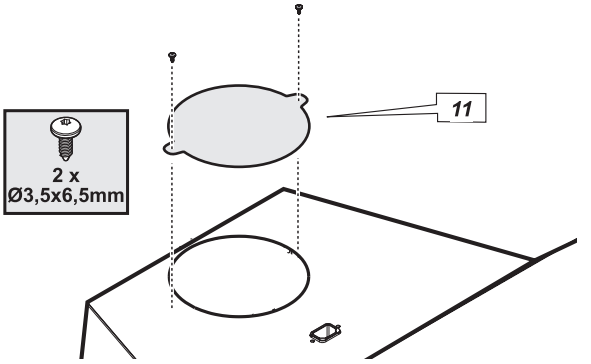

17

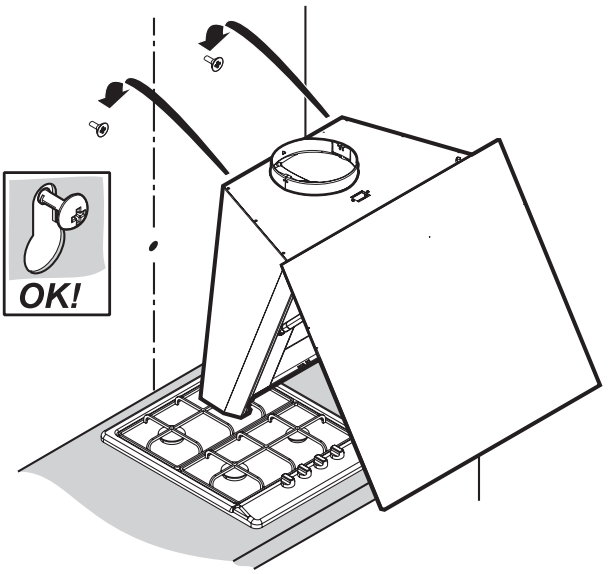

18



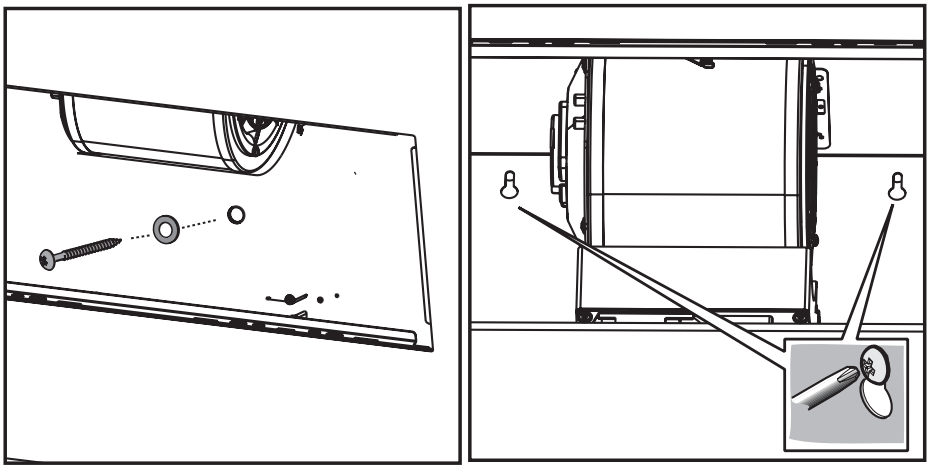

19

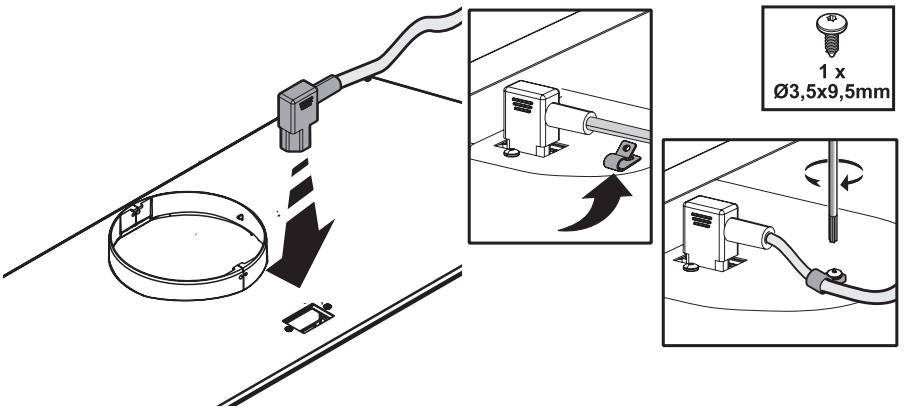

20

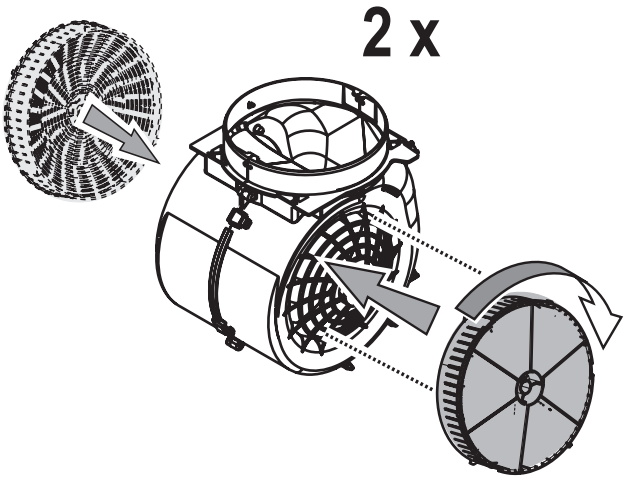

21

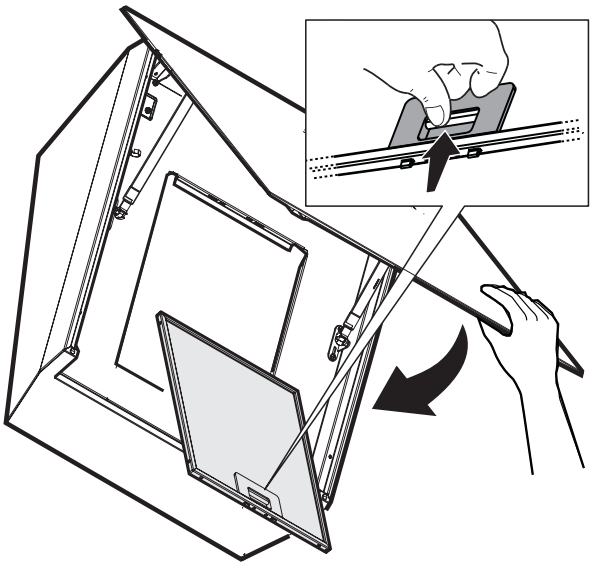

22

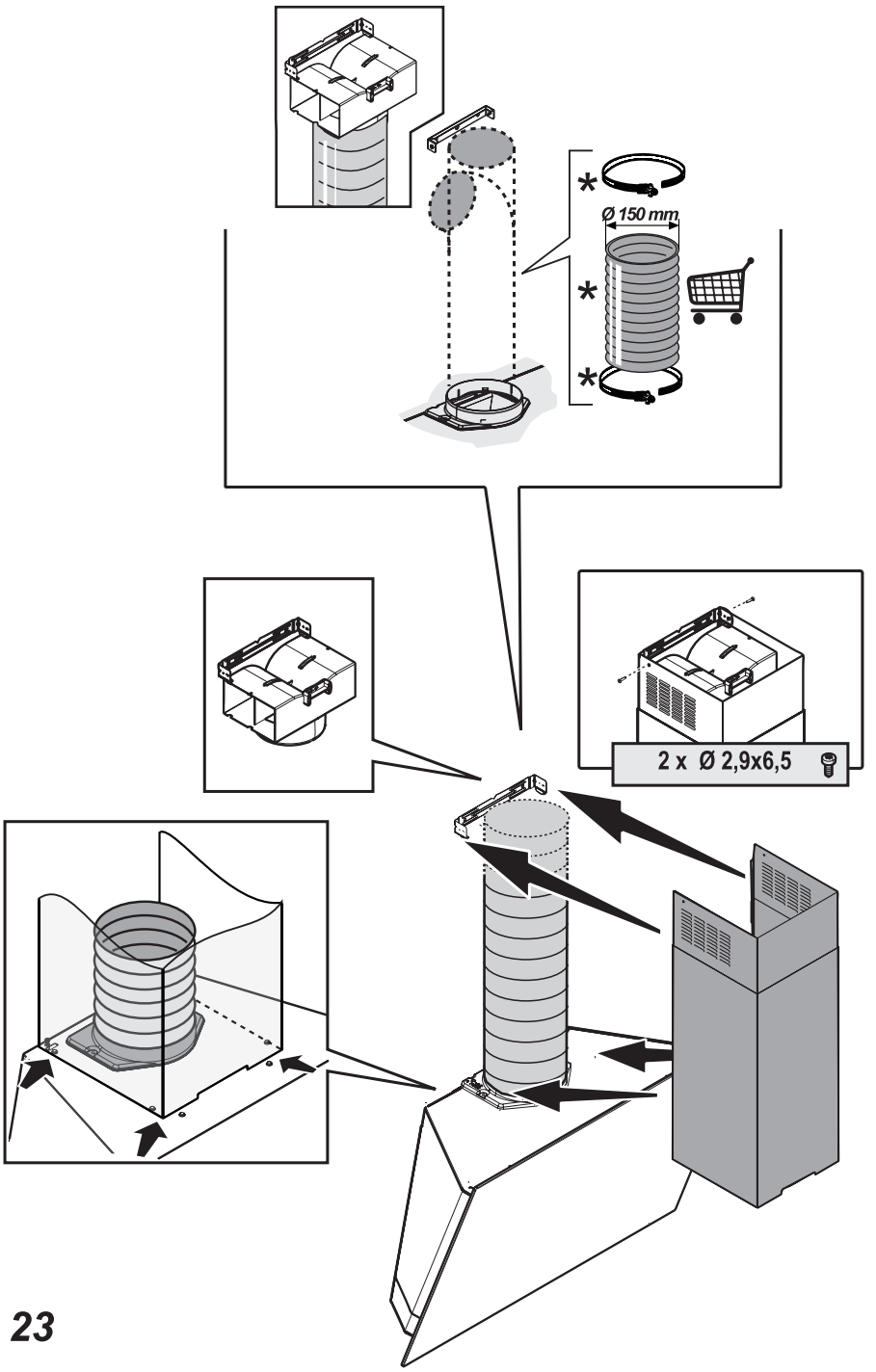

23

400011169562