AKR 808 MR

12NC: 857953811000

GTIN (EAN) code: 8003437203435

SENSING THE DIFFERENCE



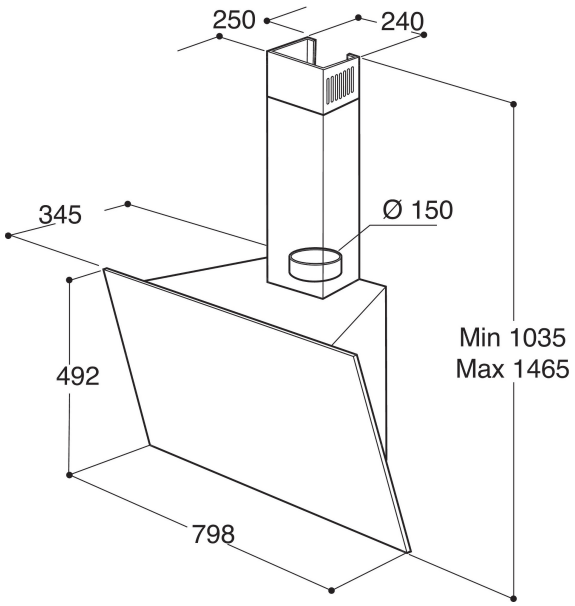

MAIN FEATURES

Product group	Hood
Colour body	Black
Material body	Stainless steel / glass
Colour chimney	Black
Material chimney	Metal
Typology	Wall-mounted
Installation type	Wall-mounted
Type of control	Electronic
Type of control settings	-
Decor panel options	N/A
Motor location	Integrated motor in hood body
Operating Mode	Convertible
Electrical connection rating (W)	408
Current (A)	1,7
Voltage (V)	220-240
Frequency (Hz)	50
Length of Electrical Supply Cord (cm)	150
Plug type	Schuko
Chimney height (mm)	560
Height of product, without chimney (mm)	485
Height of the product	1045
Width of the product	798
Depth of the product	364
Minimum niche height	0
Minimum niche width	0
Niche depth	0
Net weight (kg)	23

TECHNICAL FEATURES

Type of manual control devices	Touch control
Type of automatic control devices	-
Number of motors	1
Total power of the motors (W)	310
Number of speed settings: boost option availability	4
Boost presence	Yes
Maximum output air extraction (m^3/h)	779
Boost position air extraction (m^3/h)	779
Maximum output recirculating air (m^3/h)	490
Boost position output recirculating (m^3/h)	511
Light Control Type	On/Off
Number of lights	2
Type of lamps used	LED
Total power of the lamps (W)	5
Diameter of air outlet (mm)	150
No-return airflow flap	Yes
Grease filter material	Washable aluminium
Odour filter	No

PERFORMANCES

Sound power at min. speed (2010/30/EU)	53
Sound power at max. speed (2010/30/EU)	62
Noise level with boost position (dB(A) re 1 pW)	0