SAMSUNG

User Manual

IC025H IC925H IC033H

The color and the appearance may differ depending on the product, and the content in this manual is subject to change without prior notice to improve the performance.

The first 8 digits of the product model code are registered as a name of Digital Cinema Initiative (DCI)-compliant equipment.

For the product model code, refer to the label on the back of the product.

- An administration fee may be charged if either
  - (a) an engineer is called out at your request and there is no defect in the product (i.e. where you have failed to read this user manual).
  - (b) you bring the unit to a repair center and there is no defect in the product (i.e. where you have failed to read this user manual).
- The amount of such administration charge will be advised to you before any work or home visit is carried out.

© Samsung Electronics
Samsung Electronics owns the copyright for this manual. Use or reproduction of this manual in parts or entirety without the authorization of Samsung Electronics is prohibited.
Trademarks other than Samsung Electronics are property of their respective owners.

Table of contents

Before Using the Product

Safety Precautions 3
Safety symbols 3
Electricity and Safety 4
Installation 5
Operation 6
Cleaning 7

Preparations

Ports 8

Connecting Devices

Precautions when handling the cabinets 9

Installing the cabinets 10
Opening the Cover Rear 13
Removing the protective bracket 14

IMB Box Installation Location 15

Cable Connection Diagram 16

Connecting the Power Cable 19
How to connect the power cable 19

Specifications

General 21

Appendix

Responsibility for the Pay Service (Cost to Customers) 23
Not a product defect 23
A Product damage caused by customer's fault 23
Others 23

Chapter 01
Before Using the Product

Safety Precautions

The following safety instructions are to ensure your personal safety and prevent property damage. Please read the following to ensure the proper use of the product.

Safety symbols

Symbol	Name	Meaning
	Warning	A serious or fatal injury may result if instructions are not followed.
	Caution	Personal injury or damage to properties may result if instructions are not followed.
	Prohibition	Do NOT attempt.
	Instruction	Follow directions.

CAUTION			
RISK OF ELECTRIC SHOCK. DO NOT OPEN.			
CAUTION: TO REDUCE THE RISK OF ELECTRIC SHOCK, DO NOT REMOVE COVER (OR BACK). THERE ARE NO USER SERVICEABLE PARTS INSIDE. REFER ALL SERVICING TO QUALIFIED PERSONNEL.			
	This symbol indicates that high voltage is present inside. It is dangerous to make any kind of contact with any internal part of this product.		AC voltage: Rated voltage marked with this symbol is AC voltage.
	This symbol indicates that this product has included important literature concerning operation and maintenance.		DC voltage: Rated voltage marked with this symbol is DC voltage.
	Class II product: This symbol indicates that a safety connection to electrical earth (ground) is not required.		Caution. Consult instructions for use: This symbol instructs the user to consult the user manual for further safety related information.

Electricity and Safety

Warning

- Do not use a damaged power cord or plug, or a loose power socket.

  An electric shock or fire may result.
- Do not use multiple products with a single power socket.

  Overheated power sockets may cause a fire.
- Do not touch the power plug with wet hands. Otherwise, an electric shock may result.
- Do not bend or pull the power cord with force. Be careful not to leave the power cord under a heavy object.

  Damage to the cord may result in a fire or electric shock.
- Do not place the power cord or product near heat sources.

  A fire or electric shock may result.
- Insert the power plug all the way in so it is not loose.

  An unsecure connection may cause a fire.
- Connect the power plug to a grounded power socket (type 1 insulated devices only).

  An electric shock or injury may result.
- Clean any dust around the pins of the power plug or the power socket with a dry cloth.

  A fire may result.

Caution

- Do not disconnect the power cord while the product is being used.

  The product may become damaged by an electric shock.
- Only use the power cord provided with your product by Samsung. Do not use the power cord with other products.

  A fire or electric shock may result.
- Keep the power socket where the power cord is connected unobstructed.

  The power cord must be disconnected to cut off power to the product when an issue occurs.
- Hold the plug when disconnecting the power cord from the power socket.

  An electric shock or fire may result.

Installation

Warning

DO NOT PLACE CANDLES, INSECT REPELLANTS OR CIGARETTES ON TOP OF THE PRODUCT. DO NOT INSTALL THE PRODUCT NEAR HEAT SOURCES.

A fire may result.

Do not install the product in poorly ventilated spaces such as a bookcase or closet.

An increased internal temperature may cause a fire.

Do not install the product on an unstable or vibrating surface (insecure shelf, sloped surface, etc.)

- The product may fall and become damaged and/or cause an injury.
- Using the product in an area with excess vibration may damage the product or cause a fire.

Do not expose the product to direct sunlight, heat, or a hot object such as a stove.

The product lifespan may be reduced or a fire may result.

Do not install the product within the reach of young children.

The product may fall and injure children.

Edible oil, such as soybean oil, can damage or deform the product. Do not install the product in a kitchen or near a kitchen counter.

Have a technician install the wall-mount hanger.

- Installation by an unqualified person can result in an injury.
- Only use approved cabinets.

Install the product at least 10 cm away from the wall to allow ventilation.

An increased internal temperature may cause a fire.

Keep the plastic packaging out of the reach of children.

Children may suffocate.

Do not install the product in a vehicle or a place exposed to dust, moisture (water drips, etc.), oil, or smoke.

A fire or electric shock may result.

Following installation, it is recommended to dehumidify the LED Signage product before use.

- This helps prevent moisture damage and maintain optimal performance.
- For product dehumidification, refer to the supplied installation manual. The installation manual is available for download at www.samsung.com/displaysolutions.

Caution

Do not set down the product on its front.

The screen may become damaged.

When installing the product on a cabinet or shelf, make sure that the bottom edge of the front of the product is not protruding.

- The product may fall and become damaged and/or cause an injury.
- Install the product only on cabinets or shelves of the right size.

Do not drop the product while moving. Product failure or personal injury may result.

Set down the product gently.

Product failure or personal injury may result.

Installing the product in an unusual place (a place exposed to a lot of fine dust, chemical substances, extreme temperatures or a significant presence of moisture, or a place where the product will operate continuously for an extended period of time) may seriously affect its performance.

Be sure to consult Samsung Customer Service Center if you want to install the product at such a place.

Operation

Warning

There is a high voltage inside the product. Never disassemble, repair or modify the product yourself.

- A fire or electric shock may result.
- Contact Samsung Customer Service Center for repairs.

Do not let children hang from the product or climb on top of it.

Children may become injured or seriously harmed.

If the product is dropped or the outer case is damaged, turn off the power switch and disconnect the power cord. Then contact Samsung Customer Service Center.

Continued use can result in a fire or electric shock.

Do not leave heavy objects or items that children like (toys, sweets, etc.) on top of the product.

The product or heavy objects may fall as children try to reach for the toys or sweets resulting in a serious injury.

Do not move the product by pulling the power cord or any cable.

Product failure, an electric shock or fire may result from a damaged cable.

Do not lift or move the product by pulling the power cord or any cable.

Product failure, an electric shock or fire may result from a damaged cable.

Ensure the vents are not blocked by tablecloths or curtains.

An increased internal temperature may cause a fire.

Do not insert metallic objects (chopsticks, coins, hairpins, etc) or objects that burn easily (paper, matches, etc) into the product (via the vent or input/output ports, etc).

- Be sure to power off the product and disconnect the power cord when water or other foreign substances have entered the product. Then contact Samsung Customer Service Center.
- Product failure, an electric shock or fire may result.

Do not place objects containing liquid (vases, pots, bottles, etc) or metallic objects on top of the product.

- Be sure to power off the product and disconnect the power cord when water or other foreign substances have entered the product. Then contact Samsung Customer Service Center.
- Product failure, an electric shock or fire may result.

Before moving the product, turn off the power switch and disconnect the power cable and all other connected cables.

Damage to the cord may result in a fire or electric shock.

If the product generates abnormal sounds, a burning smell or smoke, disconnect the power cord immediately and contact Samsung Customer Service Center.

An electric shock or fire may result.

During a lightning or thunderstorm, power off the product and remove the power cable.

A fire or electric shock may result.

Do not drop objects on the product or apply impact.

A fire or electric shock may result.

If a gas leakage is found, do not touch the product or power plug. Also, ventilate the area immediately.

Sparks can cause an explosion or fire.

Do not use or keep combustible spray or an inflammable substance near the product.

An explosion or fire may result.

Caution

The screen is bright. Keep a sufficient distance from the screen.

- Continuously looking at the screen up close is bad for your eyes.
- Watch the screen 6 to 8 meters away from the first row of the movie theater.

Do not use humidifiers or stoves around the product.

A fire or electric shock may result.

Do not touch the screen when the product has been turned on for an extended period of time as it will become hot.

Do not place heavy objects on the product.

Product failure or personal injury may result.

Disconnect the power cord from the power socket if you do not plan on using the product for an extended period of time (vacation, etc).

Dust accumulation combined with heat can cause a fire, electric shock or electric leakage.

Store small accessories out of the reach of children.

Cleaning

Be careful when touching the LED fixture on the front of the product. There is a risk that LED elements may fall off.

Contact Customer Service Center if the inside of the product needs cleaning (service fee will be charged).

Chapter 02
Preparations

Ports

The color and shape of parts may differ from what is shown. Specifications are subject to change without notice to improve quality.

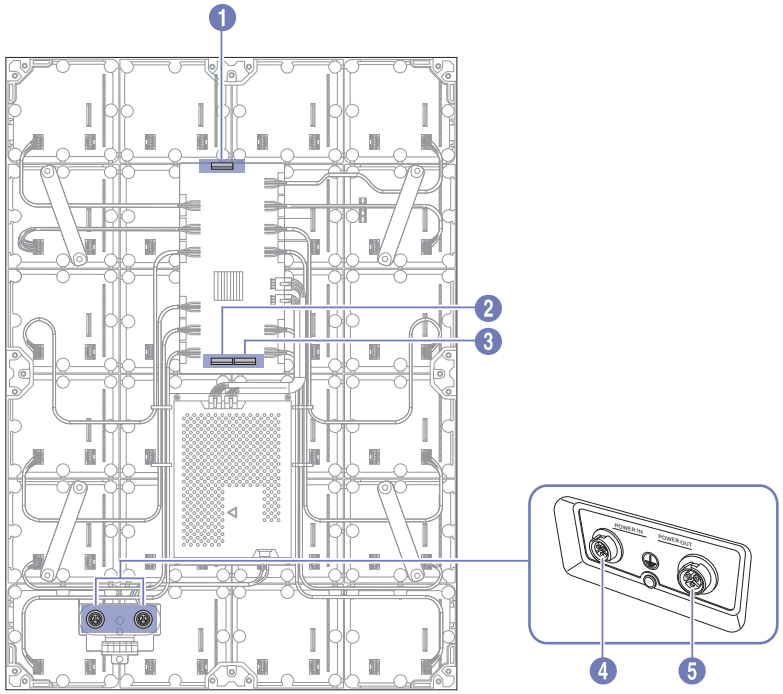

Parts		Description
1	FFC port (Tx)	Connects to the FFC port (Rx) on the next cabinet using an FFC cable for video signal output. Use it when connecting cabinets vertically.
2	FFC port (Rx)	Connects to the FFC port (Tx) on the previous cabinet using an FFC cable for video signal input.
3	FFC port (Tx)	Connects to the FFC port (Rx) on the next cabinet using an FFC cable for video signal output. Use it when connecting cabinets horizontally.
4	POWER IN	Connects to an AC power.
5	POWER OUT	Connects the power cable to the next cabinet to support AC power.

Chapter 03
Connecting Devices

Precautions when handling the cabinets

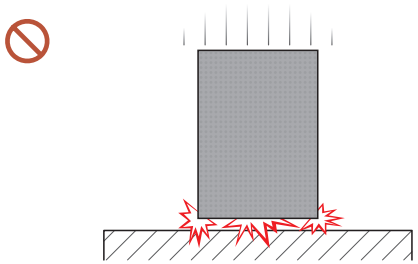

[Caution to prevent external shock and dropping of the product]

After removing the protective brackets, be careful not to expose the product to external shocks or vibrations. Make sure that the product is not dropped from any height.

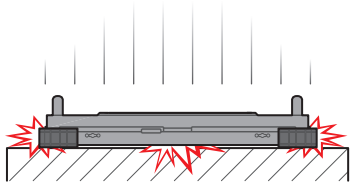

[Caution to prevent damage to the LED]

Be careful not to expose the product to vibrations or external shocks when it is lying flat on the floor.

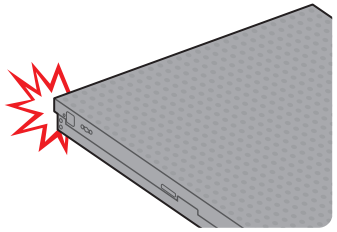

[Caution to prevent damage to corners]

Take extra care to ensure that the corners of a cabinet do not get damaged.

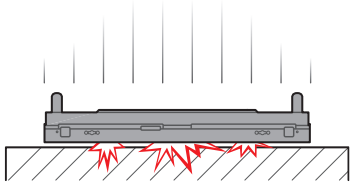

[Caution to prevent damage to the LED]

After removing the protective brackets, do not place the product on the floor with the LED facing down.

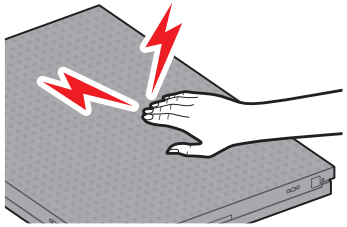

[Caution to prevent damage to the LED from static]

Do not touch the product without anti-static gloves.

- Be sure to wear anti-static gloves when touching the product.

Installing the cabinets

- Make sure that a professional installer installs the cabinets. For more information about installation, contact your product distributor.

[Installation order when looking from the back side (IC025H)]

- Make sure that different models are installed in different floors. To identify the model name, see the label on the back of the product.
  LH025ICH*ES/** (2nd to 6th floors): 80 units
  LH025ICH*AS/** (1st floor): 16 units

Install in order from the center to outside to distribute the load.

16	14	12	10	8	6	4	2	1	3	5	7	9	11	13	15
32	30	28	26	24	22	20	18	17	19	21	23	25	27	29	31
48	46	44	42	40	38	36	34	33	35	37	39	41	43	45	47
64	62	60	58	56	54	52	50	49	51	53	55	57	59	61	63
80	78	76	74	72	70	68	66	65	67	69	71	73	75	77	79
96	94	92	90	88	86	84	82	81	83	85	87	89	91	93	95



[Installation order when looking from the back side (IC925H)]

- Make sure that different models are installed in different floors. To identify the model name, see the label on the back of the product.
  LH925ICH*ES/** (2nd to 3rd floors): 16 units
  LH925ICH*AS/** (1st floor): 8 units

Install in order from the center to outside to distribute the load.

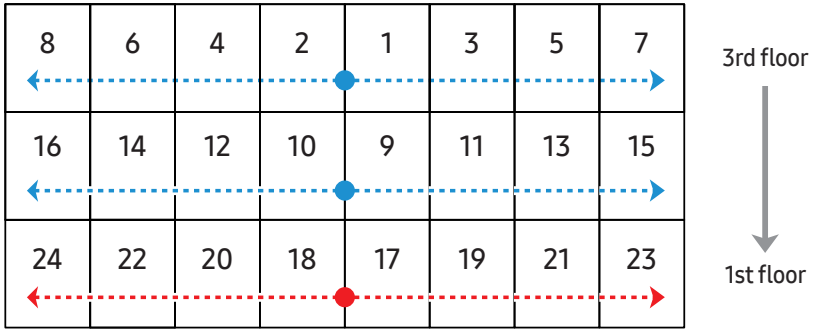

[Installation order when looking from the back side (IC033H)]

- Make sure that different models are installed in different floors. To identify the model name, see the label on the back of the product.
  LH033ICH*ES/** (2nd to 8th floors): 154 units
  LH033ICH*AS/** (1st floor): 22 units

Install in order from the center to outside to distribute the load.

22	20	18	16	14	12	10	8	6	4	2	1	3	5	7	9	11	13	15	17	19	21
44	42	40	38	36	34	32	30	28	26	24	23	25	27	29	31	33	35	37	39	41	43
66	64	62	60	58	56	54	52	50	48	46	45	47	49	51	53	55	57	59	61	63	65
88	86	84	82	80	78	76	74	72	70	68	67	69	71	73	75	77	79	81	83	85	87
110	108	106	104	102	100	98	96	94	92	90	89	91	93	95	97	99	101	103	105	107	109
132	130	128	126	124	122	120	118	116	114	112	111	113	115	117	119	121	123	125	127	129	131
154	152	150	148	146	144	142	140	138	136	134	133	135	137	139	141	143	145	147	149	151	153
176	174	172	170	168	166	164	162	160	158	156	155	157	159	161	163	165	167	169	171	173	175

8th floor

1st floor

Opening the Cover Rear

Remove the Cover Rear before mounting the product on the frame.

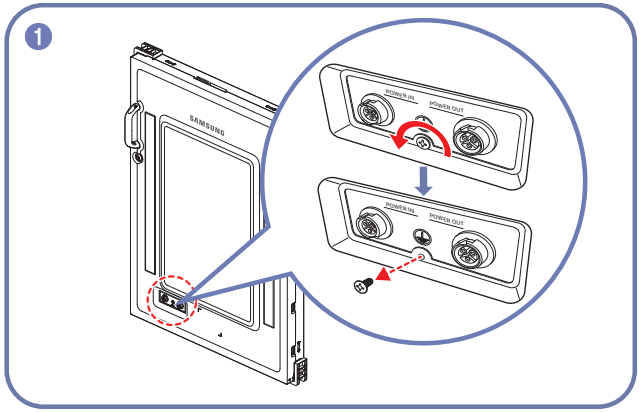

Remove the screw.

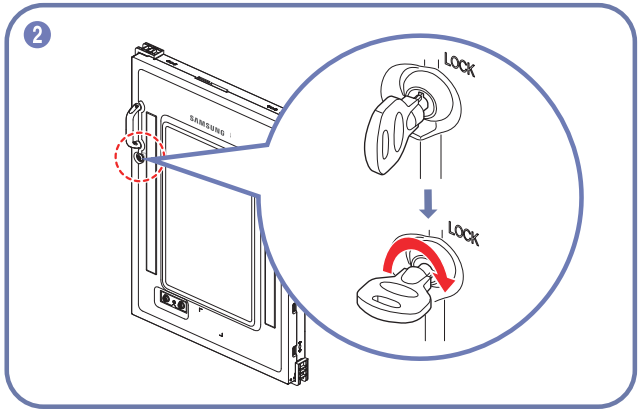

Insert the key, and then rotate it 90° to the right.

The key can come off only in the LOCK position. You cannot pull out the key when it is not in the LOCK position.

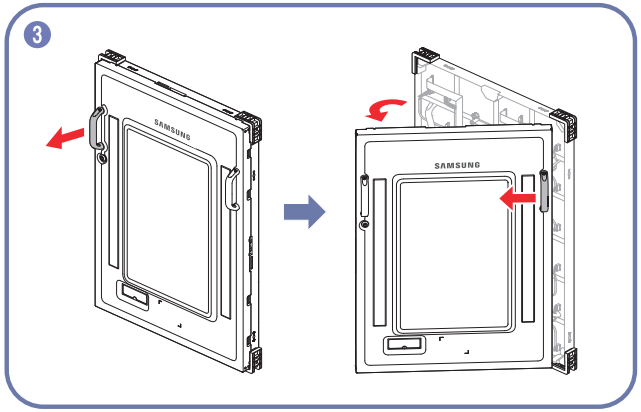

Pull forward the left handle, and slide it to the left to open the cover.

Removing the protective bracket

When no problem is found from screen inspection, remove the protective bracket before mounting the product on the frame.

When removing the bracket, be careful so that the product does not fall over.

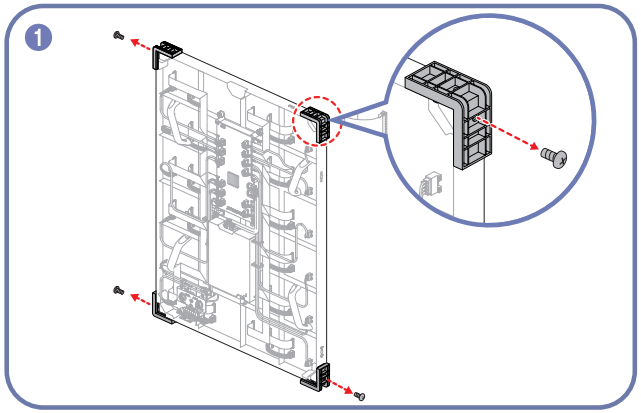

Remove the screws from the sides of the product.

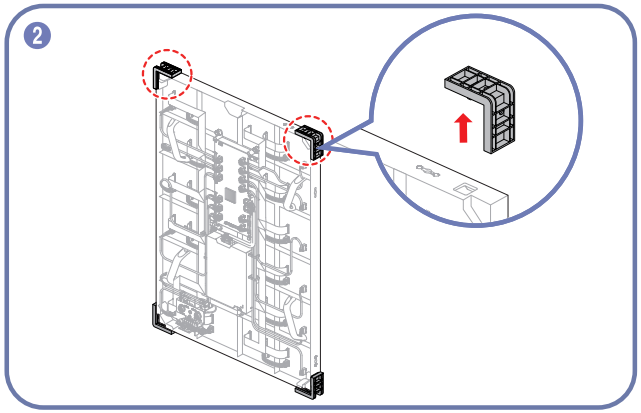

Remove the upper bracket.

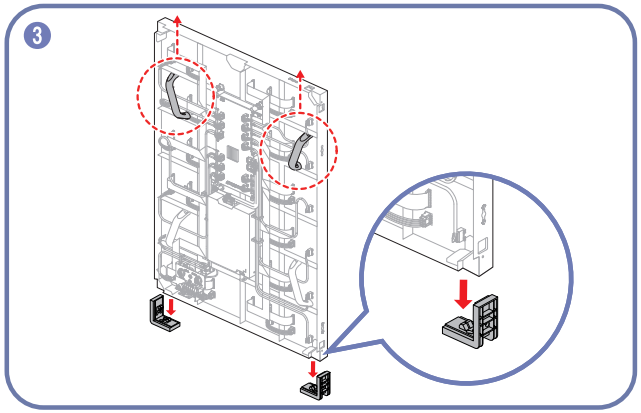

Grab the handle and lift the product. The lower bracket is released naturally.

IMB Box Installation Location

For video signal transmission, install the IMB Box in an installed cabinet.

The IMB Box is not provided by default with the product. Purchase and install one separately.

[IMB Box installation location when looking from the back side]

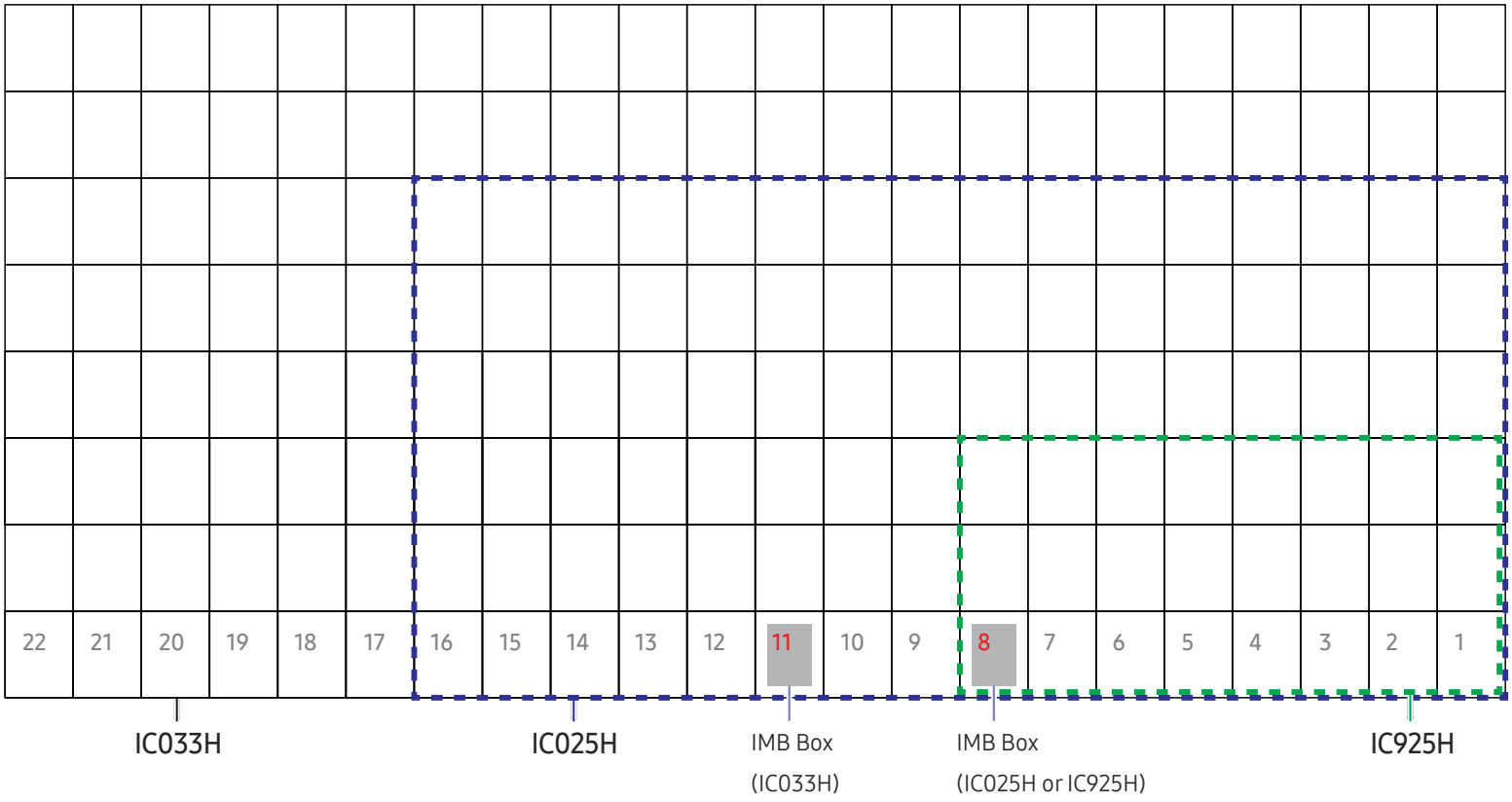

Cable Connection Diagram

Connect the FFC cable between two cabinets. (FFC Connector: ▭)

[Cable Connection Diagram on the Rear Panel (IC025H/IC925H)]

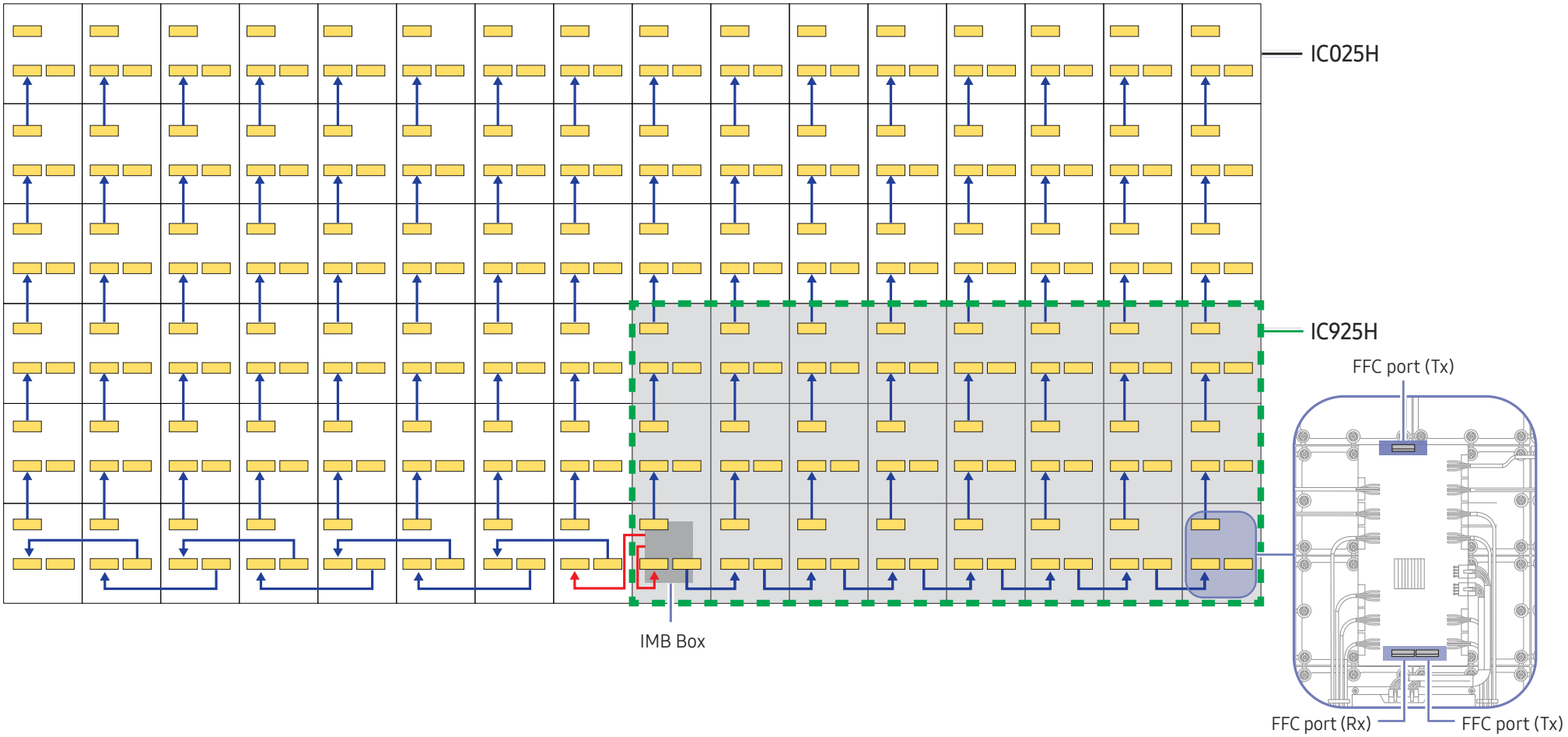

Connect the FFC cable between two cabinets. (FFC Connector: ▭)

[Cable Connection Diagram on the Rear Panel (IC033H)]



[Cabinet IDs when looking from the front side]

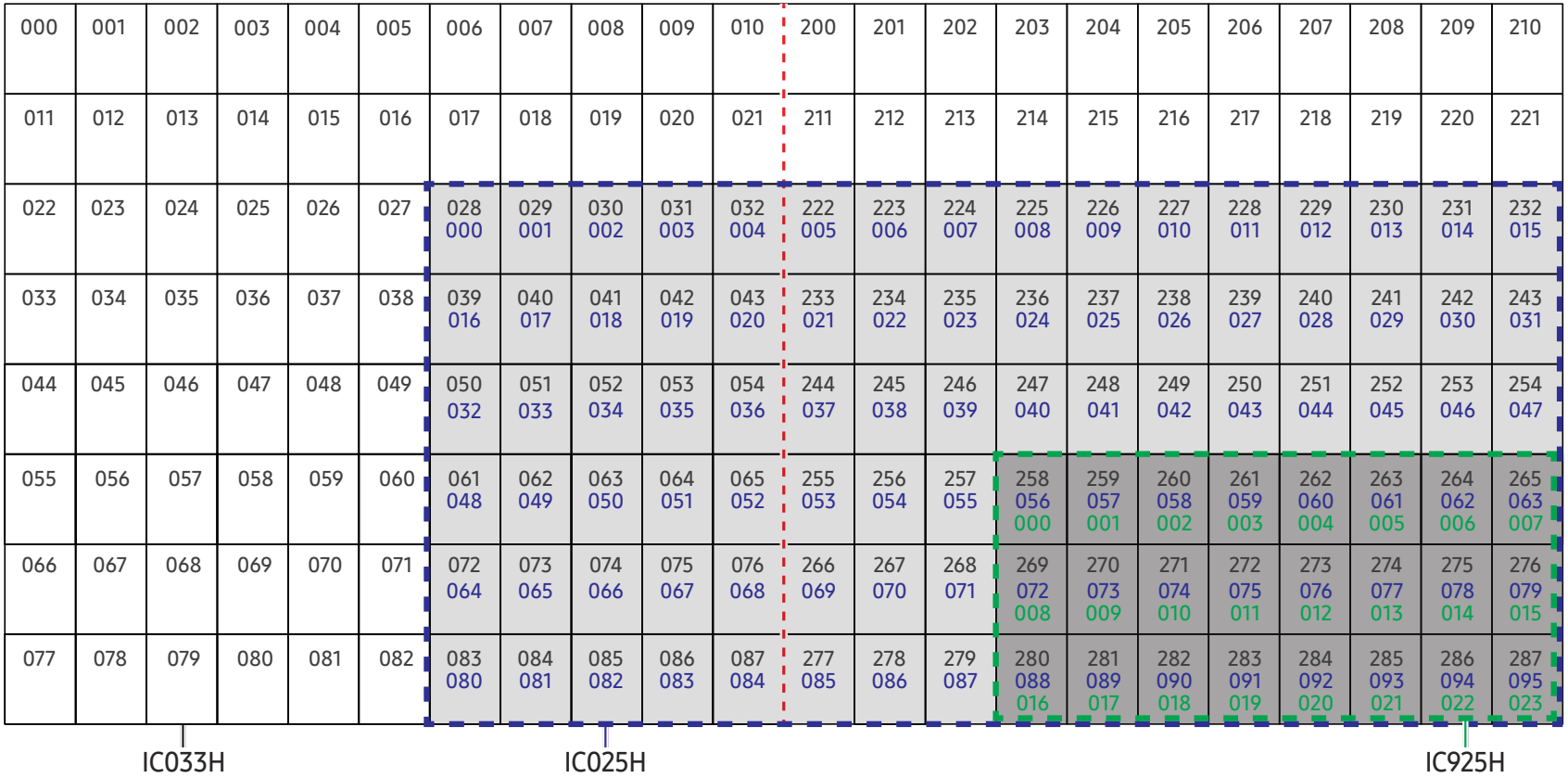

Connecting the Power Cable

How to connect the power cable

- Connect the power cable after all cables are connected.
  Before connecting external devices, be sure to disconnect the power cable.
- Connect the power cable connected to the power distribution board to the cabinets in the first left and right columns from the center of the screen.

[Power cable connection order when looking from the back side]

POWER IN: ● / POWER OUT: ●

IC025H

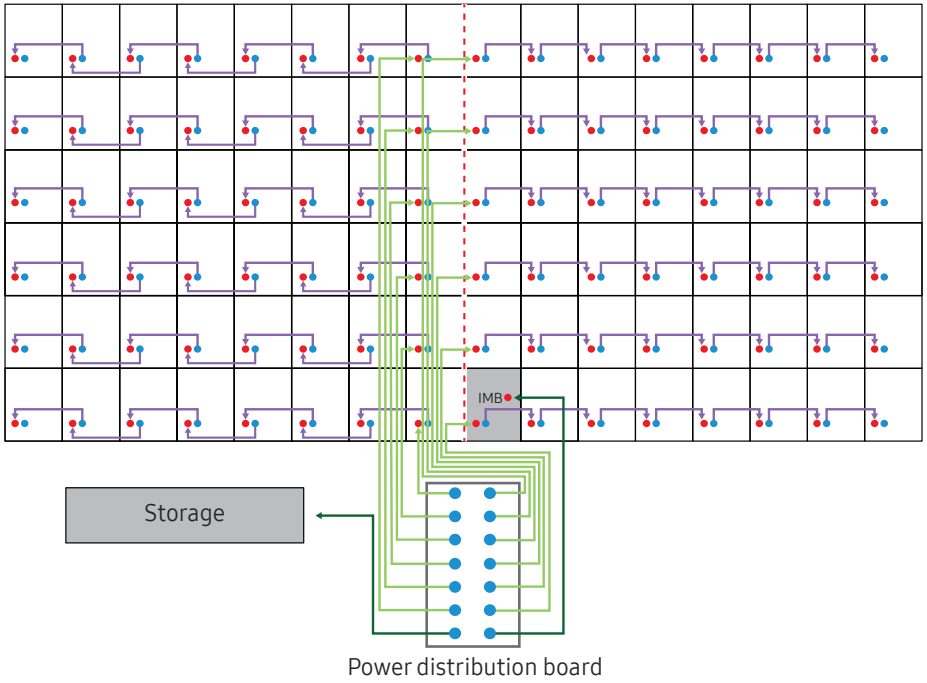

⚠ Precautions when connecting power

- Do not connect the power cable connected to the power distribution board to the **POWER OUT** port.
- IC025H, IC925H: Connection is allowed up to 8 cabinets when the 110 V / 220 V power supply is used.
- IC033H: Connection is allowed up to 11 cabinets when the 110 V / 220 V power supply is used.

Exceeding the recommended maximum number of devices may produce overvoltage, causing the circuit breaker to trip down or the product to be damaged. Make sure that the number of connected devices does not exceed the recommended maximum number.

Samsung Electronics is not liable for any problems incurred by connecting devices that exceed the recommended maximum number.

IC925H

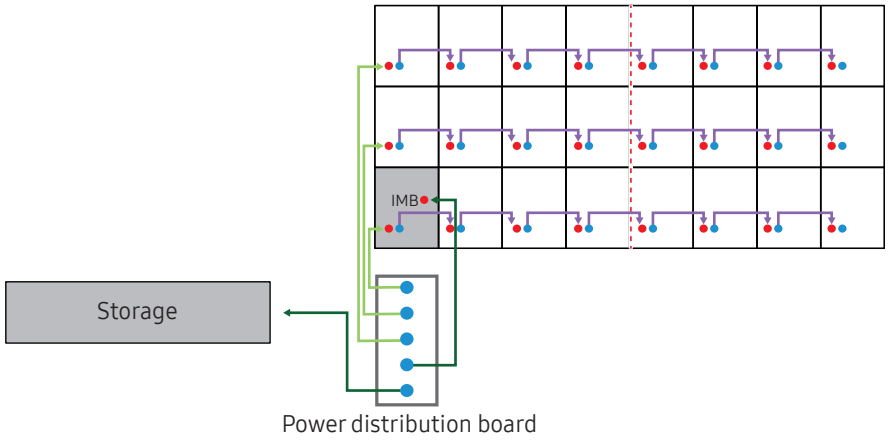

IC033H

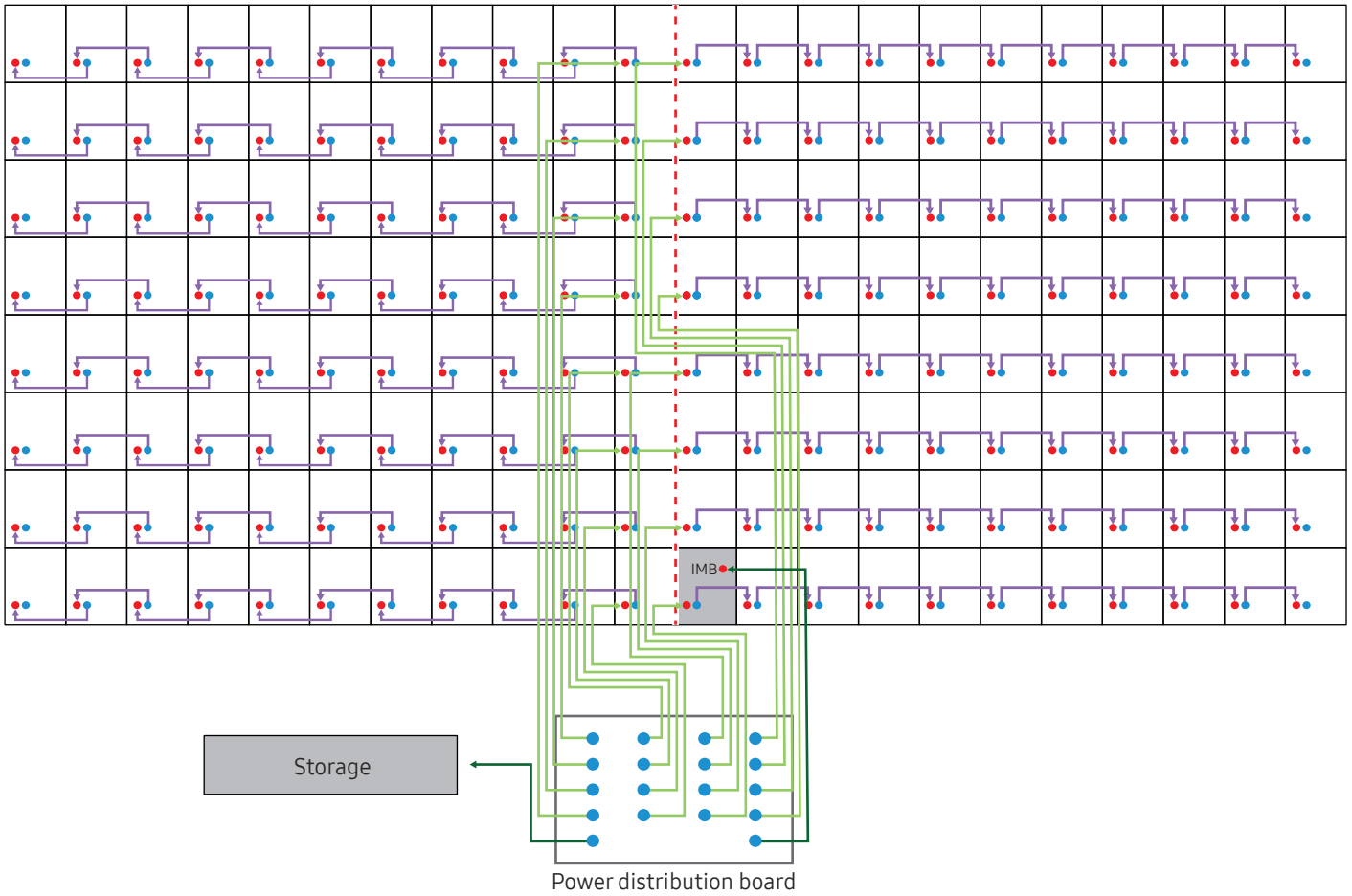

Chapter 04
Specifications

General

Model Name		IC025H	IC925H	IC033H
Cabinet	Pixel Pitch	2.5 mm		3.33 mm
	LED pixel configuration	3 in 1 (RGB)		
	LED pixel size (W x H)	1.0 mm x 1.0 mm		
	Pixels (Row x Column)	256 x 360		192 x 270
	Aspect ratio (W:H)	32:45		
Synchronization	Video Frame rate	24/25/30Hz, 3D Mode: 24Hz	24/25/30/48/50/60Hz, 3D Mode: 24Hz	24/25/30Hz, 3D Mode: 24Hz
Power Supply		AC100-240V~ 50/60Hz		
Environmental considerations	Operating	Temperature: 32 °F - 104 °F (0 °C - 40 °C) Humidity: 10% - 80%, non-condensing		
	Storage	Temperature: -4 °F - 113 °F (-20 °C - 45 °C) Humidity: 5% - 95%, non-condensing		

Plug-and-Play

This monitor can be installed and used with any Plug-and-Play compatible systems. Two-way data exchange between the monitor and PC system optimizes the monitor settings. Monitor installation takes place automatically. However, you can customize the installation settings if desired.

This is a class A product. In a domestic environment this product may cause radio interference in which case the user may be required to take adequate measures.

For detailed device specifications, visit the Samsung Electronics website.

(USA only)

Dispose unwanted electronics through an approved recycler.

To find the nearest recycling location, go to our website: www.samsung.com/recyclingdirect or call, 1-800-SAMSUNG

Chapter 05
Appendix

Responsibility for the Pay Service (Cost to Customers)

When the service is requested, in spite of in warranty, we may charge you for a visit from a service technician in the following cases.

Not a product defect

Cleaning of the product, Adjustment, Explanation, Re-installation and etc.

- If a service technician gives instructions on how to use product or simply adjusts options without disassembling product.
- If a defect is caused by external environmental factors (Internet, Antenna, Wired Signal, etc.)
- If a product is reinstalled or devices are connected additionally after installing the purchased product for the first time.
- If a product is reinstalled to move to a different spot or to move to a different house.
- If customer requests instructions on how to use because of another company's product.
- If customer requests instructions on how to use the network or another company's program.
- If customer requests software installation and setup for the product.
- If a service technician removes/cleans dusts or foreign materials inside of the product.
- If customer requests an installation additionally after purchasing a product through home-shopping or online.

A Product damage caused by customer's fault

Product damage caused by customer's mishandling or wrong repair

If a product damage is caused by;

- External impact or drop.
- Use of supplies or separatly sold product unspecified by Samsung.
- Repair from a person besides an engineer of outsourcing service company or partner of Samsung Electronics Co., Ltd.
- Remodeling or repairing the product by customer.
- Using it with incorrect voltage or non-authorized electrical connections.
- Not following the "cautions" in User Manual.

Others

- If product fails by natural disaster. (lightning, fire, earthquake, flood damage, etc)
- If consumable components are all used up. (Battery, Toner, Fluorescent lights, Head, Vibrator, Lamp, Filter, Ribbon, etc.)

If customer requests a service in case the product has no defect, service fee may be charged. So please read User Manual first.