THE BEST SUPPORT
FOR YOUR AV & IT HARDWARE
T: + 31(0)23-5478888 | E: info@newstar.eu | W: www.newstar.eu

NM-W475BLACK NEWSTAR FLAT SCREEN WALL MOUNT

Newstar TV/Monitor Wall Mount (Full Motion) for 32"-75" Screen - Black



SPECIFICATIONS

Color	Black
Distance to wall	5 - 51 cm
Height adjustment	None
Max. screen size	75
Max. weight	40
Min. screen size	32
Min. weight	0
Rotate (degrees)	5°
Screens	1
Swivel (degrees)	120°
Tilt (degrees)	20°
Type	Full motion
	Tilt
	Rotate
	Swivel
VESA maximum	600x400 mm
VESA minimum	200x200 mm
Warranty	5 year
EAN code	8717371444679

The NewStar wall mount, model NM-W475BLACK is a full swing tilt- and swivel wall mount for flat screens up to 75”. This mount is a great choice when you want the ultimate viewing flexibility with your flat screen TV. Effortless pull the display out from the wall, position it in almost any direction, turn it around corners and then smoothly return it to the wall when finished.

NewStars’ tilt (20°) and swivel (120°) technology allows the mount to change to any viewing angle to fully benefit from the capabilities of the flat screen. The mount is easily depth adjustable from 5 to 61 centimetres. An innovative cable management conceals and routes cables from mount to flat screen. Hide your cables to keep living room, bedroom or home cinema installation nice and tidy.

NewStar NM-W475BLACK has three pivot points and is suitable for screens up to 75" (191 cm). The weight capacity of this product is 40 kg each screen. The wall mount is suitable for screens that meet VESA hole pattern 200x200 to 600x400mm. Different hole patterns can be covered using NewStar VESA adapter plates.

Create a clean design ambiance for your flat screen TV in a living room, bedroom or public environment.

All installation material is included with the product.

NewStar Products Europe B.V.
Wateringweg 62/B
2031 EJ HAARLEM
THE NETHERLANDS

Phone : +31(0)23-5478888
Fax : +31(0)23-5478889
Email : info@newstar.nl
Website : www.newstar.eu

NewStar cannot be held liable for any inaccuracies and copyrights.
No part of this publication may be reproduced and/or published by print, photocopy, microfilm or in any other way, without prior written permission of NewStar Computer Products Europe BV.

THE BEST SUPPORT
FOR YOUR AV & IT HARDWARE
T: + 31(0)23-5478888 | E: info@newstar.eu | W: www.newstar.eu

NM-W475BLACK NEWSTAR FLAT SCREEN WALL MOUNT

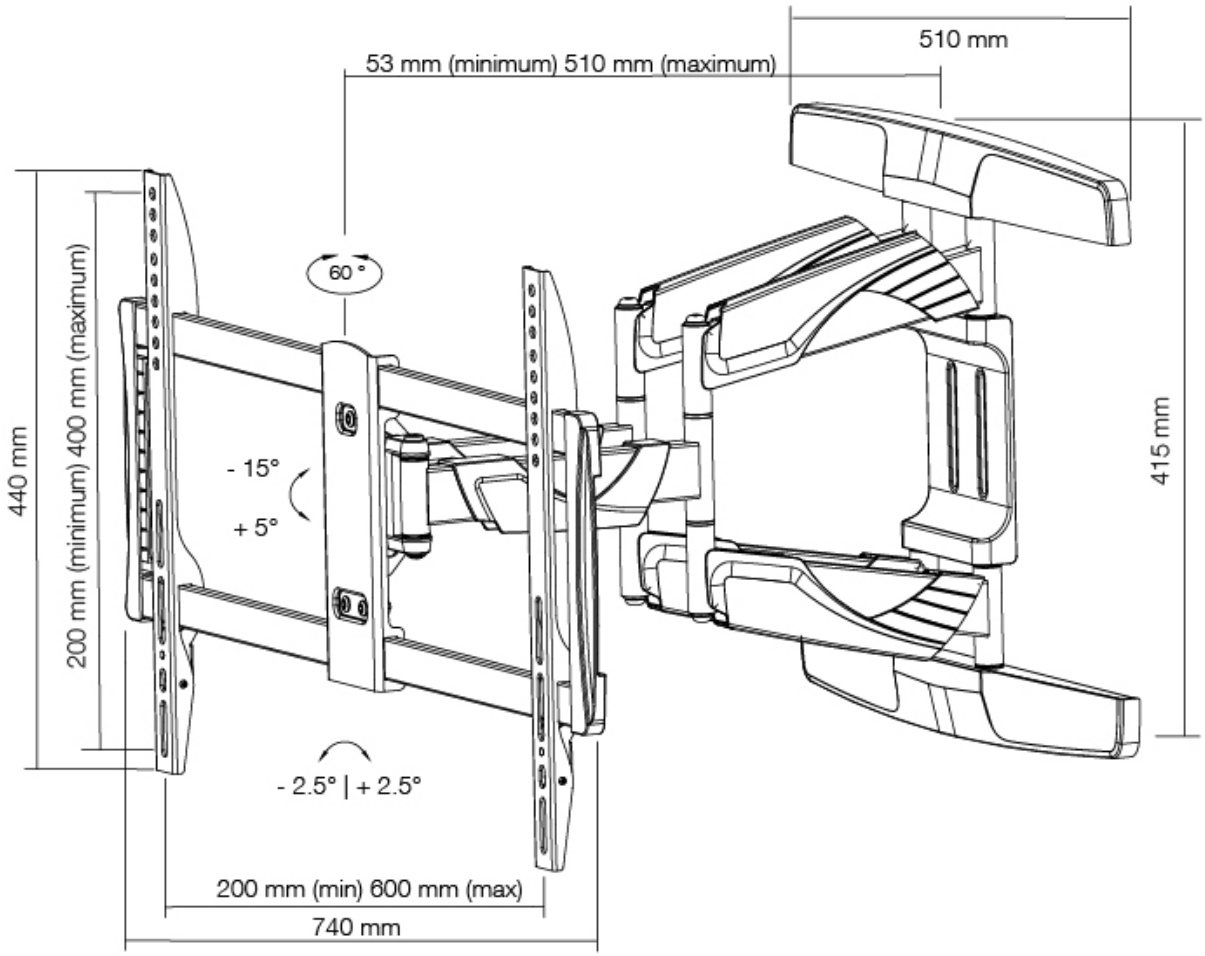

NewStar Products Europe B.V.
Wateringweg 62/B
2031 EJ HAARLEM
THE NETHERLANDS

Phone : +31(0)23-5478888
Fax : +31(0)23-5478889
Email : info@newstar.nl
Website : www.newstar.eu

NewStar cannot be held liable for any inaccuracies and copyrights.

No part of this publication may be reproduced and/or published by print, photocopy, microfilm or in any other way, without prior written permission of NewStar Computer Products Europe BV.