Quick Start

Thank you for purchasing the MSI® **MEG X399 CREATION** motherboard. This Quick Start section provides demonstration diagrams about how to install your computer. Some of the installations also provide video demonstrations. Please link to the URL to watch it with the web browser on your phone or tablet. You may have even link to the URL by scanning the QR code

Preparing Tools and Components

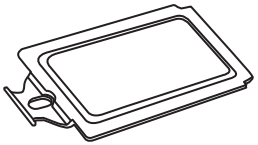

AMD® Ryzen Threadripper CPU

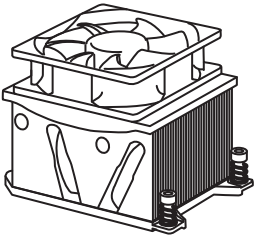

CPU Fan

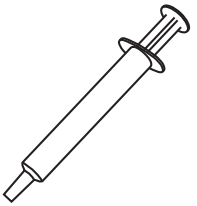

Thermal Paste

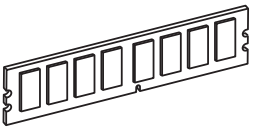

DDR4 Memory

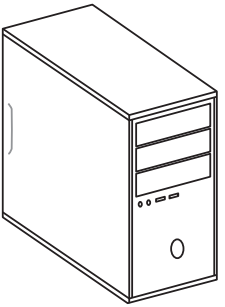

Chassis

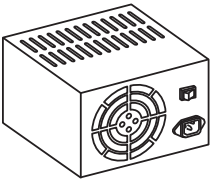

Power Supply Unit



SATA DVD Drive

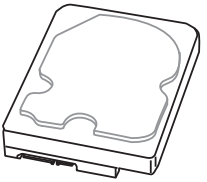

SATA Hard Disk Drive

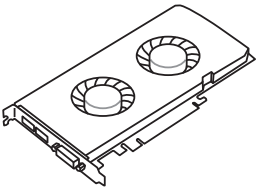

Graphics Card

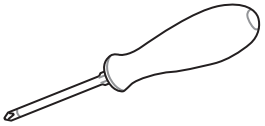

Phillips Screwdriver

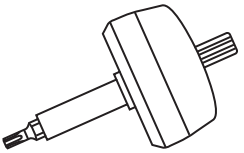

Torqkey Screwdriver



A Package of Screws

Installing a Processor

https://youtu.be/yk4EpVUU03E

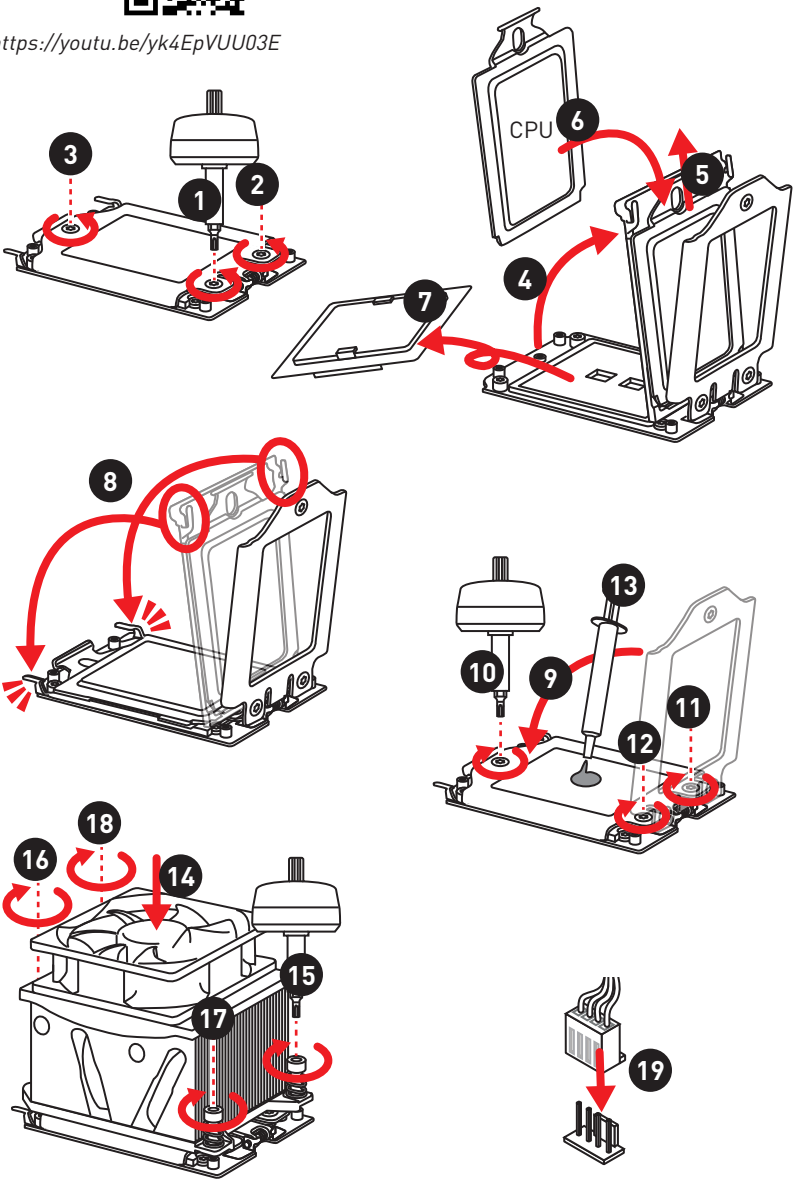

Installing DDR4 memory

http://youtu.be/T03aDrJPyQs

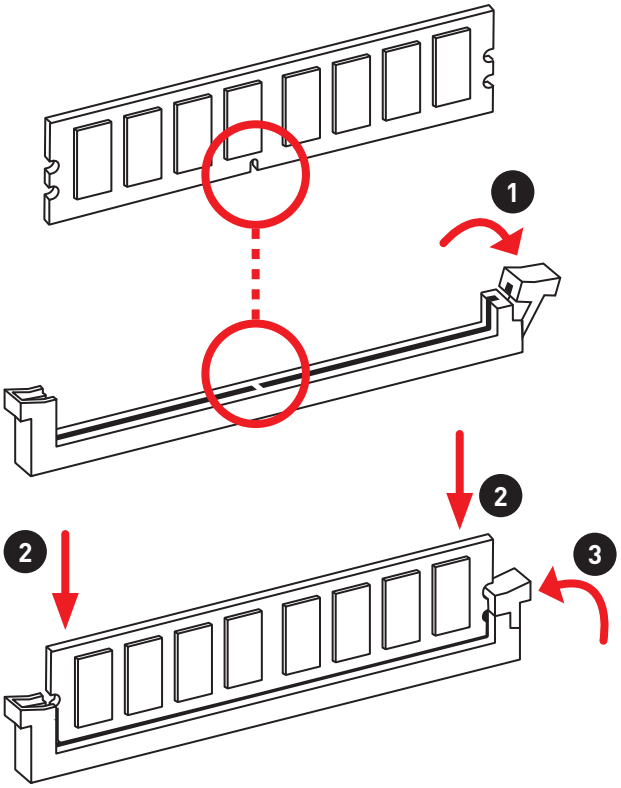

Connecting the Front Panel Header

http://youtu.be/DPELIdVNZUI

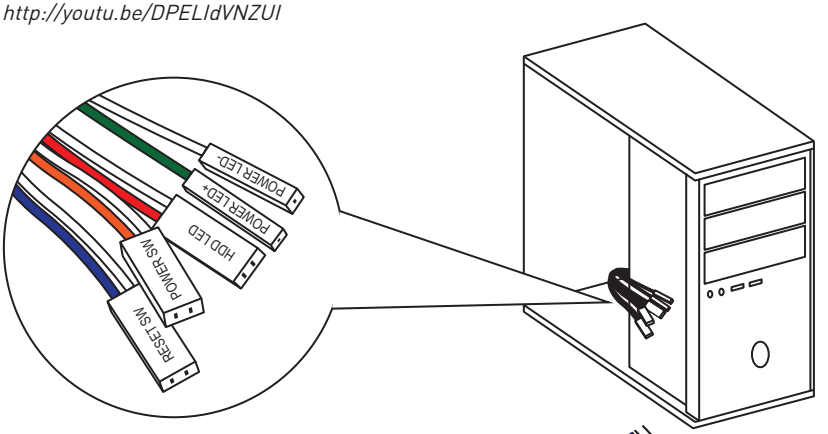

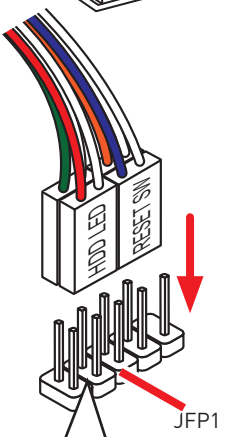



1	HDD LED +	2	Power LED +
3	HDD LED -	4	Power LED -
5	Reset Switch	6	Power Switch
7	Reset Switch	8	Power Switch
9	Reserved	10	No Pin

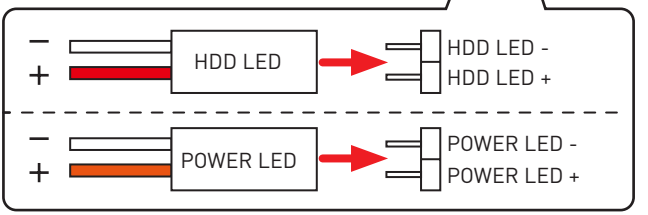

Installing the Motherboard

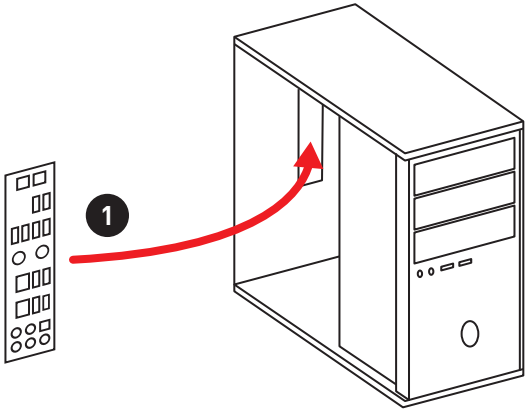

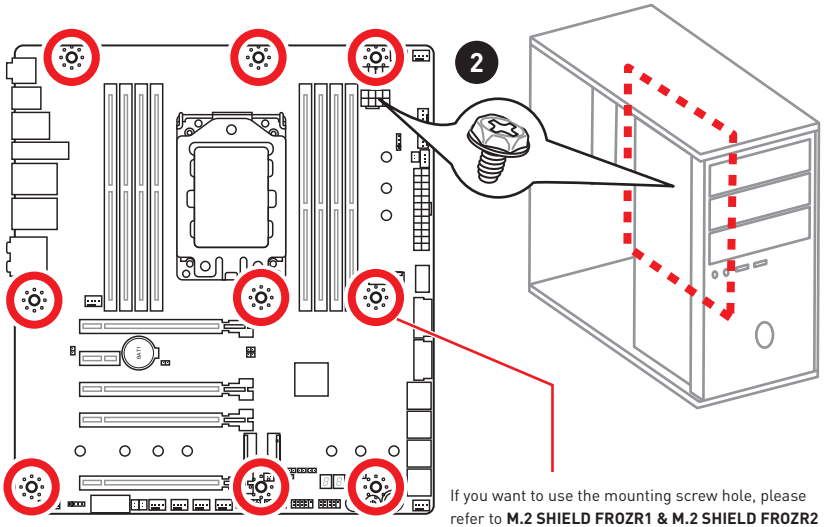

If you want to use the mounting screw hole, please refer to **M.2 SHIELD FROZR1 & M.2 SHIELD FROZR2** section for removing the M.2 SHIELD FROZR 2.

Installing SATA Drives

http://youtu.be/RZsMpqxythc

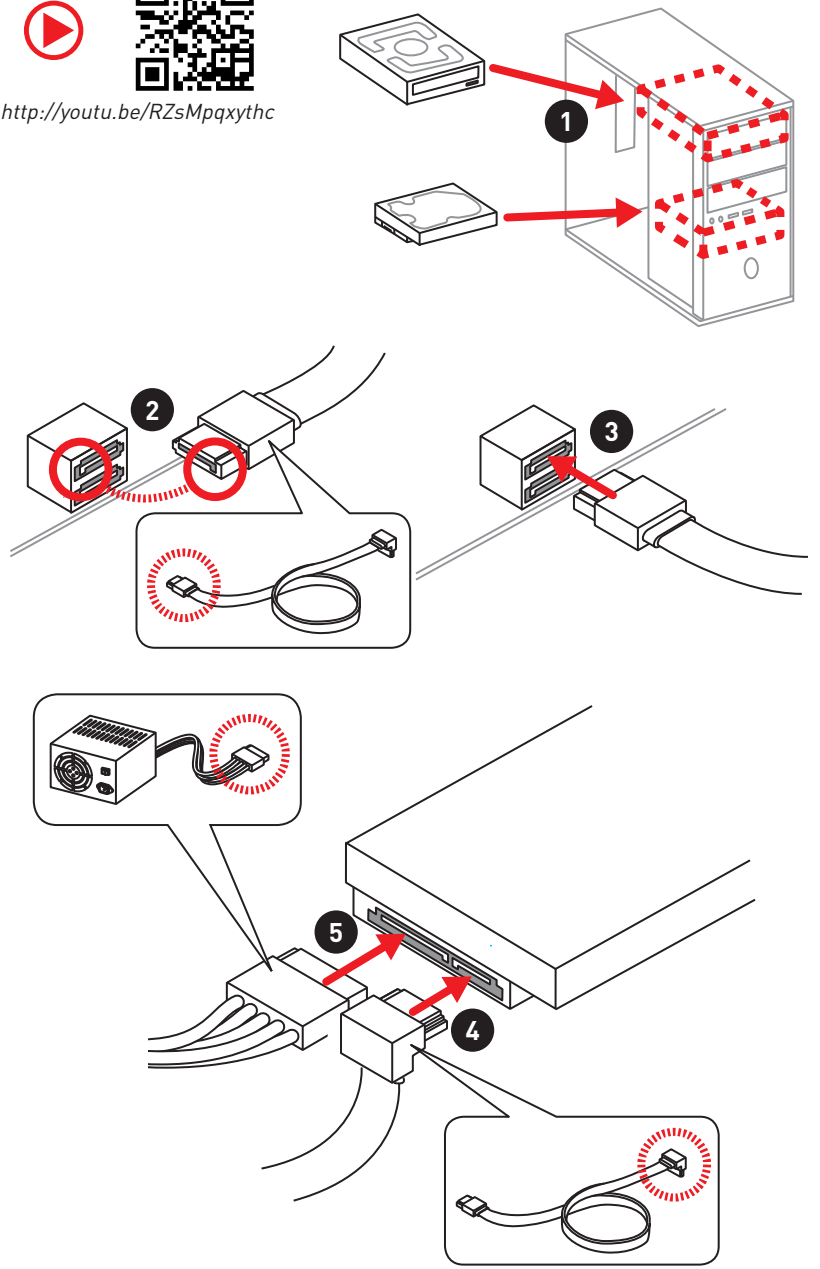

Installing a Graphics Card

http://youtu.be/mG0GZpr9w_A

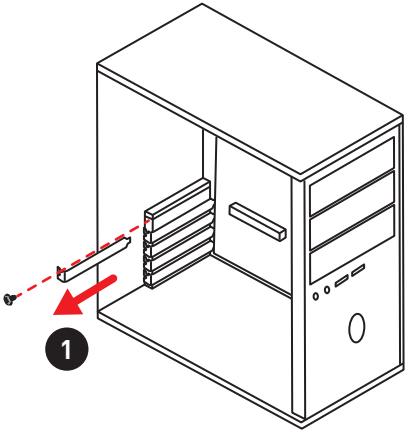

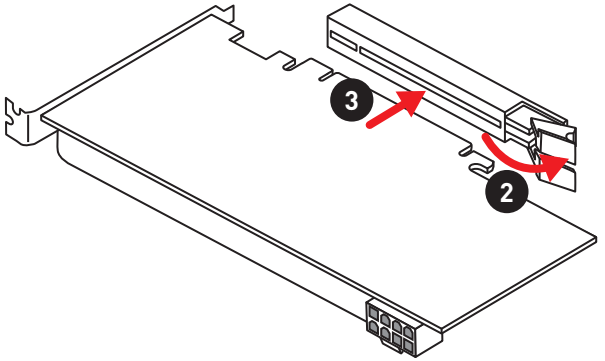

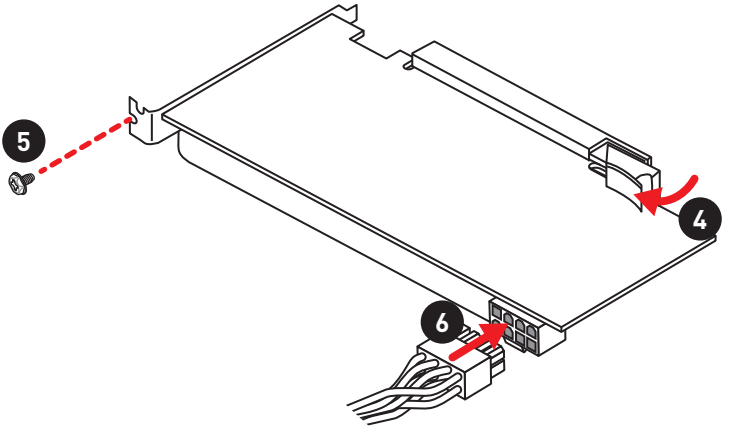

Connecting Peripheral Devices

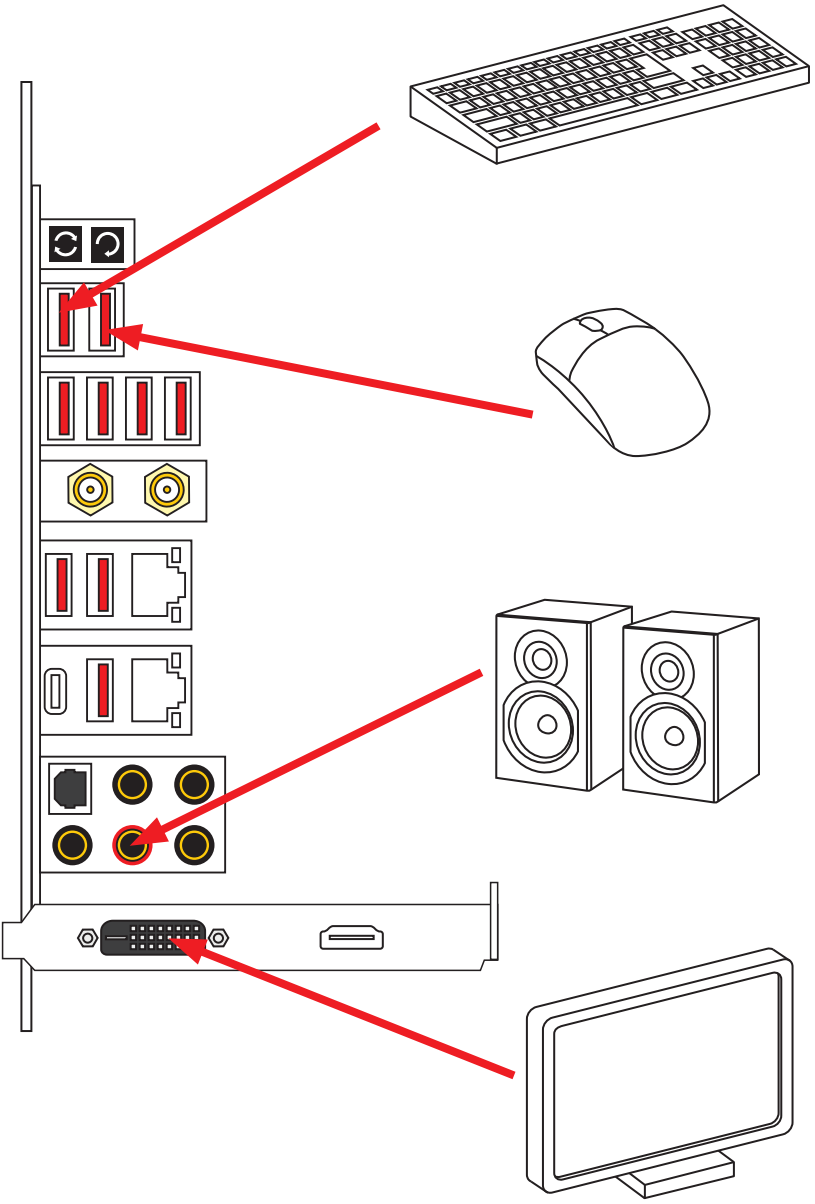

Connecting the Power Connectors

http://youtu.be/gkDYyR_83I4

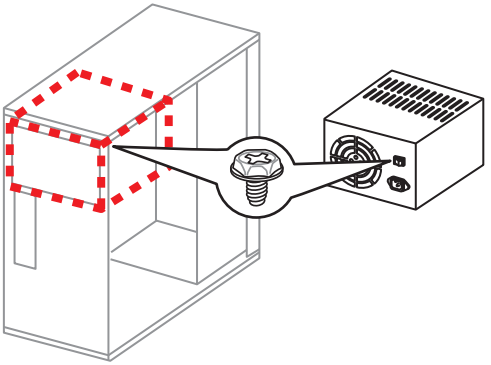

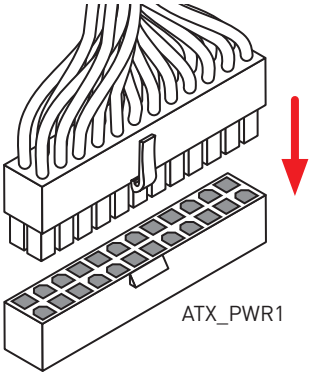

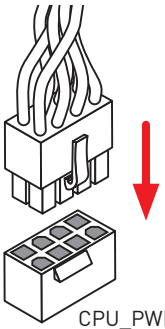

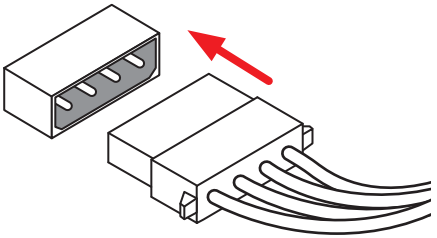

Power On

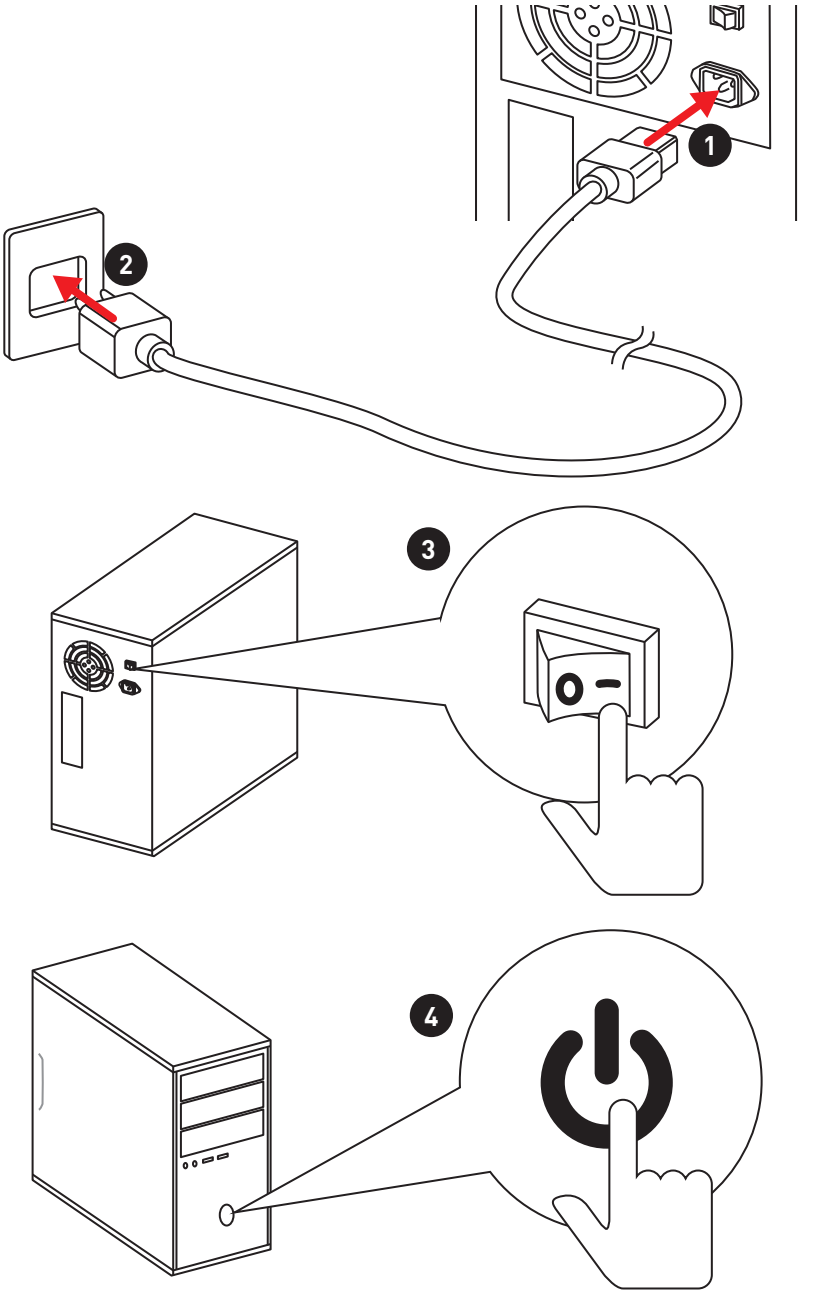

Contents

Quick Start **1**
Preparing Tools and Components 1
Installing a Processor 2
Installing DDR4 memory 3
Connecting the Front Panel Header 4
Installing the Motherboard 5
Installing SATA Drives 6
Installing a Graphics Card 7
Connecting Peripheral Devices 8
Connecting the Power Connectors 9
Power On 10
Safety Information **14**
Specifications **15**
JCORSAIR1 Connector Specification 20
Package contents **20**
Block Diagram **21**
Rear I/O Panel **22**
LAN Port LED Status Table 22
Audio Ports Configuration 22
Installing Antennas 23
Realtek Audio Console 24
Overview of Components **26**
CPU Socket 28
OC1: GAME BOOST Knob 31
JOC_RT1: OC Retry Jumper 32
JOC_FS1: OC Force Enter BIOS Jumper 32
JSLOW1: Slow Mode Booting Jumper 33
DIMM Slots 33
PCI_E1~5: PCIe Expansion Slots 36
M2_1~3: M.2 Slots (Key M) 39
Installing M.2 XPANDER-AERO card 41
SATA1~8: SATA 6Gb/s Connectors 43
JFP1, JFP2: Front Panel Connectors 43
CPU_PWR1~2, ATX_PWR1, PCIE_PWR1: Power Connectors 44
JUSB1~2: USB 2.0 Connectors 45
JUSB4~5: USB 3.1 Gen1 Connectors 45
JUSB3: USB 3.1 Gen2 Type-C Connector 46

CPU_FAN1, PUMP_FAN1, SYS_FAN1~5, EXT_FAN1~3: Fan Connectors 47
T_SEN1~3: Thermal Sensor Connectors 47
JCI1: Chassis Intrusion Connector 48
JTPM1: TPM Module Connector 48
JAUD1: Front Audio Connector 49
JBAT1: Clear CMOS (Reset BIOS) Jumper 49
JBLK_U1, JBLK_D1: Base clock Plus, Minus connectors 50
POWER1, RESET1: Power Button, Reset Button 50
JRGB1, JRGB2, JRAINBOW1: RGB LED connectors 51
JCORSAIR1: CORSAIR Connector 52

Onboard LEDs 53

EZ Debug LED 53
DIMM LEDs 53
Fan LEDs 53
JPWRLED1: LED light demonstration power input connector 54
Debug Code LED 54
Hexadecimal Character Table 54
Boot Phases 54
Debug Code LED Table 55
ACPI States Codes 57

BIOS Setup 58

Entering BIOS Setup 58
Resetting BIOS 59
Updating BIOS 59
EZ Mode 61
Advanced Mode 63
SETTINGS 64
Advanced 64
Boot 68
Security 69
Save & Exit 70
OC 71
M-FLASH 76
OC PROFILE 77

Software Description 78

Installing Windows® 10 78
Installing Drivers 78
Installing Utilities 78
APP MANAGER 79
LIVE UPDATE 6 80

COMMAND CENTER 82
GAMING APP 86
X-BOOST 91
MYSTIC LIGHT 93
MYSTIC LIGHT PARTY 97
SMART TOOL 101
RAMDISK 103
GAMING LAN MANAGER 104
Nahimic 3 106
Troubleshooting 109
Regulatory Notices 110

Safety Information

• The components included in this package are prone to damage from electrostatic discharge (ESD). Please adhere to the following instructions to ensure successful computer assembly.

• Ensure that all components are securely connected. Loose connections may cause the computer to not recognize a component or fail to start.

• Hold the motherboard by the edges to avoid touching sensitive components.

• It is recommended to wear an electrostatic discharge (ESD) wrist strap when handling the motherboard to prevent electrostatic damage. If an ESD wrist strap is not available, discharge yourself of static electricity by touching another metal object before handling the motherboard.

• Store the motherboard in an electrostatic shielding container or on an anti-static pad whenever the motherboard is not installed.

• Before turning on the computer, ensure that there are no loose screws or metal components on the motherboard or anywhere within the computer case.

• Do not boot the computer before installation is completed. This could cause permanent damage to the components as well as injury to the user.

• If you need help during any installation step, please consult a certified computer technician.

• Always turn off the power supply and unplug the power cord from the power outlet before installing or removing any computer component.

• Keep this user guide for future reference.

• Keep this motherboard away from humidity.

• Make sure that your electrical outlet provides the same voltage as is indicated on the PSU, before connecting the PSU to the electrical outlet.

• Place the power cord such a way that people can not step on it. Do not place anything over the power cord.

• All cautions and warnings on the motherboard should be noted.

• If any of the following situations arises, get the motherboard checked by service personnel:

  ▪ Liquid has penetrated into the computer.

  ▪ The motherboard has been exposed to moisture.

  ▪ The motherboard does not work well or you can not get it work according to user guide.

  ▪ The motherboard has been dropped and damaged.

  ▪ The motherboard has obvious sign of breakage.

• Do not leave this motherboard in an environment above 60°C (140°F), it may damage the motherboard.

Specifications

CPU	Supports AMD® Ryzen Threadripper processor for SocketTR4
Chipset	AMD® X399 Chipset
Memory	• 8x DDR4 memory slots, support up to 128GB* • Quad channel memory architecture** • Supports DDR4 3600+(OC)/ 3466(OC)/ 3333(OC)/ 3200(OC)/ 3066(OC)/ 2933(OC)/ 2800(OC)/ 2667(OC)/ 2667(by JEDEC)/ 2400(by JEDEC)/ 2133(by JEDEC) MHz* * For the latest information about memory, please visit http://www.msi.com ** Please refer the DIMM Slots section for more details.
Expansion Slots	• 4x PCIe 3.0 x16 slots • 1x PCIe 2.0 x1 slot
Multi-GPU	• Supports 3-Way NVIDIA® SLI™ Technology • Supports 3-Way AMD® CrossFire™ Technology
LAN	2x Intel I211 Gigabit LAN controllers
Wireless LAN & Bluetooth®	Intel® Wireless-AC 9260 card • Supports Wi-Fi 802.11 ac, 2x2, Dual Band, (2.4GHz, 5GHz) up to 1.73 Gbps speed. • Supports Bluetooth® 5
Storage	• AMD® X399 Chipset ▪ 8x SATA 6Gb/s ports • AMD® CPU ▪ 3x M.2 slots (Key M) ‣ Supports up to PCIe 3.0 x4 and SATA 6Gb/s ‣ M2_1, M2_3 slots support 2242/ 2260 /2280 storage devices ‣ M2_2 slot supports 2242/ 2260 /2280/ 22110 storage devices
RAID	AMD® X399 Chipset • Supports RAID 0, RAID 1 and RAID 10 for SATA storage devices

Continued on next page

Continued from previous page

USB	• ASMedia® ASM3142 Chipset ▪ 1x USB 3.1 Gen2 (SuperSpeed USB 10Gbps) Type-C port available through the internal USB connector • AMD® X399 Chipset ▪ 1x USB 3.1 Gen1 (SuperSpeed USB) Type-A port on the back panel ▪ 1x USB 3.1 Gen1 (SuperSpeed USB) Type-C port on the back panel ▪ 4x USB 3.1 Gen1 (SuperSpeed USB) ports available through the internal USB connectors ▪ 4x USB 2.0 (High-speed USB) ports available through the internal USB connectors • AMD® CPU ▪ 8x USB 3.1 Gen1 (SuperSpeed USB) Type-A ports on the back panel
Audio	• Realtek® ALC1220 Codec • 7.1-Channel High Definition Audio • Supports S/PDIF output
Back Panel Connectors	• 1x Clear CMOS button • 1x BIOS FLASHBACK+ button • 8x USB 3.1 Gen1 Type-A ports ▪ 1x BIOS FLASHBACK+ port • 2x WiFi antenna connectors • 1x USB 3.1 Gen1 Type-A port • 1x USB 3.1 Gen1 Type-C port • 2x LAN (RJ45) ports • 5x OFC audio jacks • 1x Optical S/PDIF OUT connector

Continued on next page

Continued from previous page

Internal Connectors	• 1x 24-pin ATX main power connector • 2x 8-pin ATX 12V power connector • 1x flat 4-pin ATX 12V power connector* • 8x SATA 6Gb/s connectors • 2x USB 2.0 connectors (supports additional 4 USB 2.0 ports) • 2x USB 3.1 Gen1 connectors (supports additional 4 USB 3.1 Gen1 ports) • 1x USB 3.1 Gen2 Type-C port • 1x 4-pin CPU fan connector • 1x 4-pin Water Pump connector • 5x 4-pin system fan connectors • 3x 4-pin extend fan connectors • 2x Front panel connectors • 1x Front panel audio connector • 2x 5050 RGB LED strip 12V connector (JRGB1~2) • 1x WS2812B Individually Addressable RGB LED strip 5V connector (JRAINBOW1) • 1x CORSAIR connector (JCORSAIR1) • 1x TPM module connector • 3x 2-pin Thermal Sensors connectors * Provides additional power to PCIe x16 slots
Internal Buttons	• 1x GAME BOOST knob • 1x Power button • 1x Reset button
Jumper	• 1x Clear CMOS jumper • 1x OC retry connector • 1x OC force enter BIOS connector • 1x Chassis Intrusion connector • 1x Slow mode connector • 1x JBLK_U1 connector • 1x JBLK_D1 connector
Debug LED	• 1x 2-Digit Debug Code LED

Continued on next page

Continued from previous page

I/O Controller	NUVOTON NCT6797 Controller Chip
Hardware Monitor	• CPU/System temperature detection • CPU/System fan speed detection • CPU/System fan speed control
Form Factor	• EATX Form Factor • 12 in. x 10.7 in. (30.4 cm x 27.2 cm)
BIOS Features	• 1x 128 Mb flash • UEFI AMI BIOS • ACPI 6.0, SM BIOS 2.8 • Multi-language
Software	• Drivers • APP MANAGER • SUPER CHARGER • COMMAND CENTER • LIVE UPDATE 6 • SMART TOOL • GAMING APP • X-BOOST • MYSTIC LIGHT (LED) • RAMDISK • GAMING LAN MANAGER • Nahimic 3 • Open Broadcaster Software (OBS) • CPU-Z MSI GAMING • Norton™ Internet Security Solution • Google Chrome™ ,Google Toolbar, Google Drive

Continued on next page

Continued from previous page

Special Features	• Audio Boost 4 • Nahimic 3 • GAMING LAN with Gaming LAN Manager • Intel WiFi • Triple Turbo M.2 • Pump Fan • Smart Fan Control • Mystic Light • Mystic Light Extension • Mystic light SYNC • EZ DEBUG LED • DDR4 Steel Armor • M.2 Shield FROZR • PCI-E Steel Armor • Multi GPU – SLI Technology • Multi GPU – CrossFire Technology • DDR4 Boost • GAME Boost • Core Boost • Voice Boost • OC Engine (Clock gen) • USB with type A+C • AMD Turbo USB3.1 Gen 1 • Front Lightning USB 3.1 Gen 2 Type-C • VR Ready • GAMING HOTKEY • GAMING MOUSE Control • Click BIOS 5 • BIOS FLASHBACK+

JCORSAIR1 Connector Specification

Supporting CORSAIR RGB Products	Maximum connection
Lighting PRO RGB LED Strip	20
HD RGB Fan	6
SP RGB Fan	6
LL RGB Fan	6

Package contents

Please check the contents of your motherboard package. It should contain:

- User Manual
- Quick Installation Guide
- Driver DVD
- SATA 6G Cable x4
- LED Y CABLE
- LED JCORSAIR CABLE
- LED JRAINBOW CABLE
- SENSOR CABLE x3
- M.2 Xpander-AERO
- SLI HB BRIDGE M
- WiFi antenna
- Case Badge
- HDD Sticker
- VIP card
- I/O Shielding
- M.2 Screw x3

Important

If any of the above items are damaged or missing, please contact your retailer.

Block Diagram

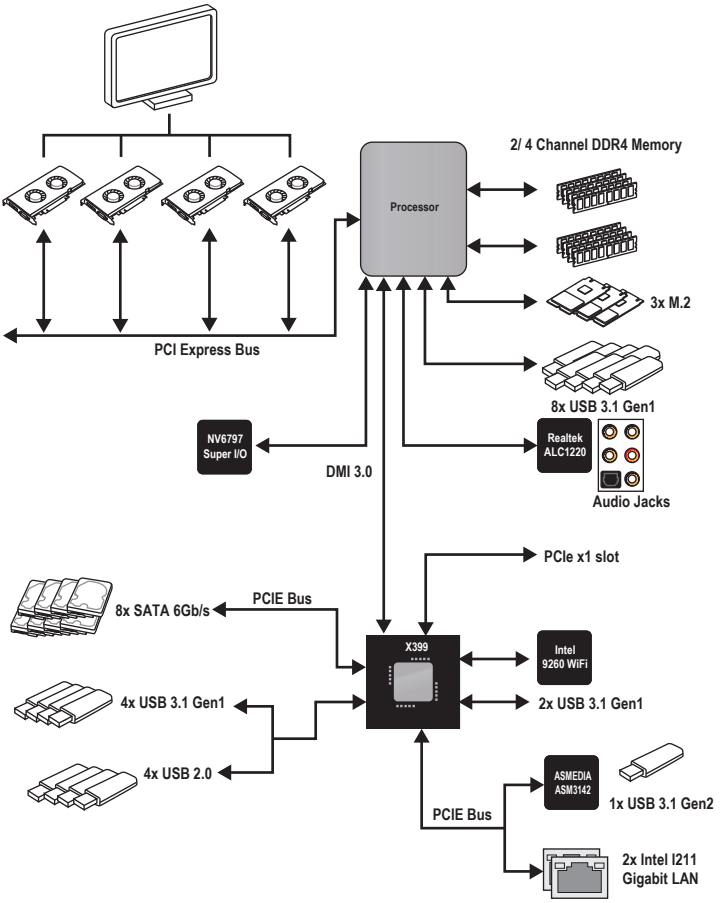

Rear I/O Panel

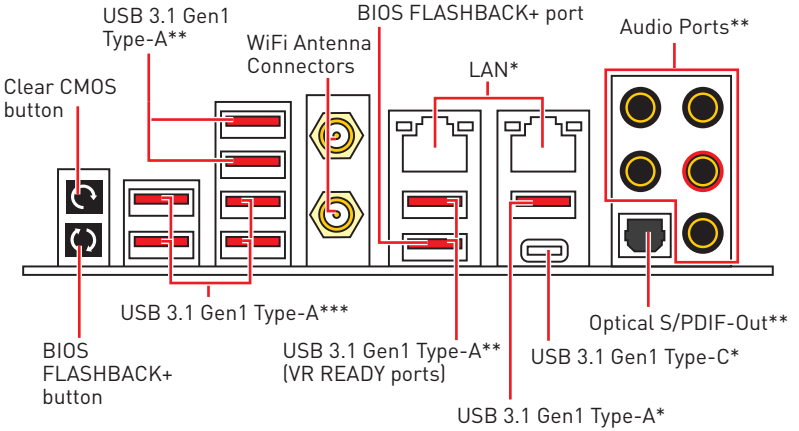

• **Clear CMOS button** - Power off your computer. Press and hold the Clear CMOS button for about 5-10 seconds to reset BIOS to default values.

• **BIOS FLASHBACK+ port/ button** - Please refer to page 60 for Updating BIOS with BIOS FLASHBACK+.

* Controlled by Promontory.

** For 2990WX processor, these ports are controlled by Die 0.

*** For 2990WX processor, these ports are controlled by Die 1.

LAN Port LED Status Table

Link/ Activity LED	
Status	**Description**
Off	No link
Yellow	Linked
Blinking	Data activity

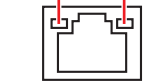

Speed LED	
Status	**Description**
Off	10 Mbps connection
Green	100 Mbps connection
Orange	1 Gbps connection

Audio Ports Configuration

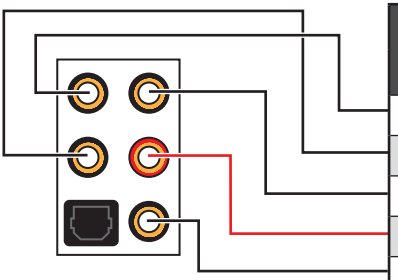

Audio Ports	Channel			
	2	4	6	8
Center/ Subwoofer Out			●	●
Rear Speaker Out		●	●	●
Line-In/ Side Speaker Out				●
Line-Out/ Front Speaker Out	●	●	●	●
Mic In				

(●: connected, **Blank**: empty)

Installing Antennas

1. Combine the antenna with the base.
2. Screw two antenna cables tight to the WiFi antenna connectors as shown.

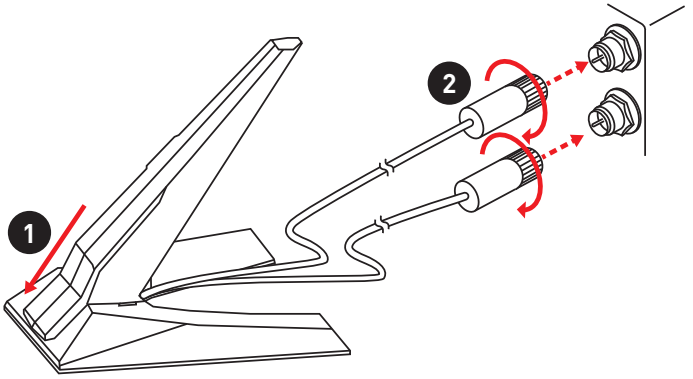

3. Place the antenna as high as possible.

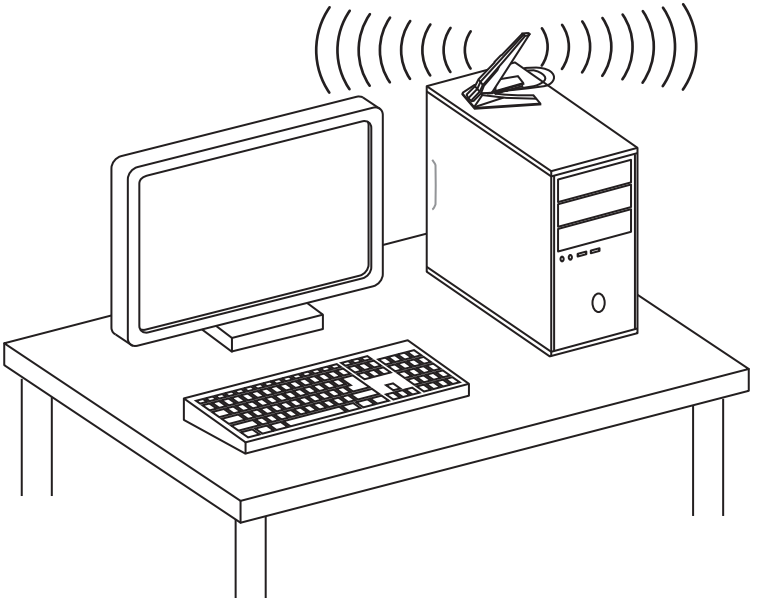

Realtek Audio Console

After Realtek Audio Console is installed. You can use it to change sound settings to get better sound experience.

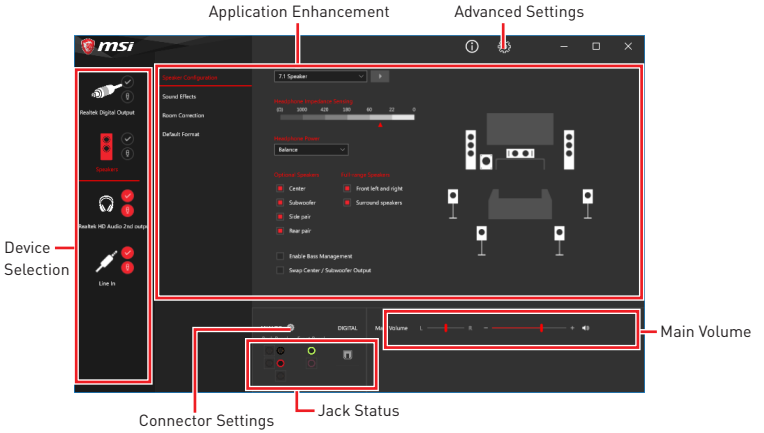

• **Device Selection** - allows you to select a audio output source to change the related options. The **check** sign indicates the devices as default.

• **Application Enhancement** - the array of options will provide you a complete guidance of anticipated sound effect for both output and input device.

• **Advanced Settings** - provides the mechanism to deal with 2 independent audio streams.

• **Main Volume** - controls the volume or balance the right/left side of the speakers that you plugged in front or rear panel by adjust the bar.

• **Jack Status** - depicts all render and capture devices currently connected with your computer.

• **Connector Settings** - configures the connection settings.

Auto popup dialog

When you plug into a device at an audio jack, a dialogue window will pop up asking you which device is current connected.

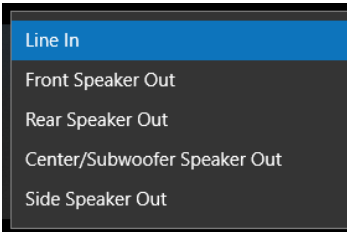

Each jack corresponds to its default setting as shown on the next page.

Important

The pictures above for reference only and may vary from the product you purchased.

Audio jacks to headphone and microphone diagram

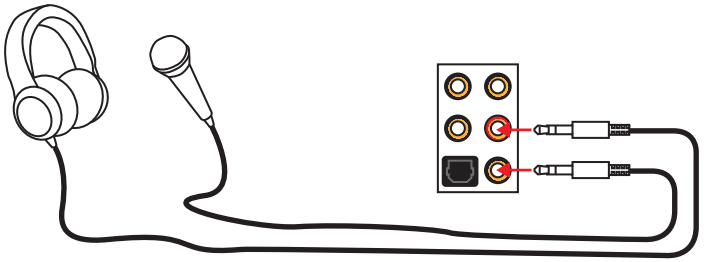

Audio jacks to stereo speakers diagram

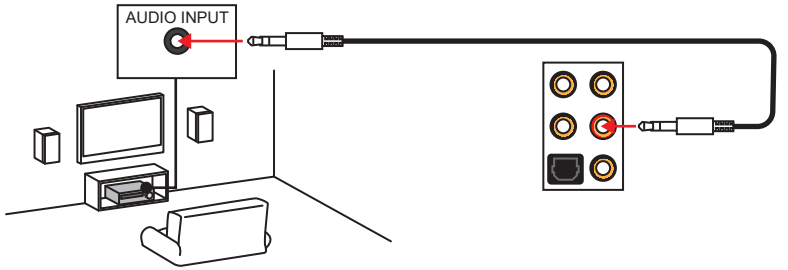

Audio jacks to 7.1-channel speakers diagram

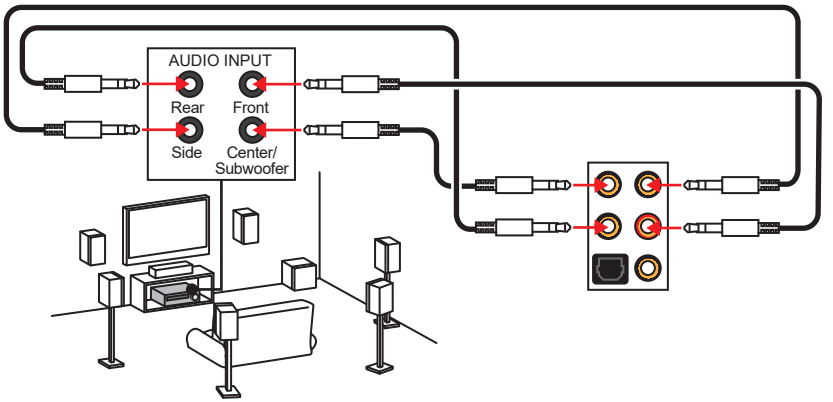

Overview of Components

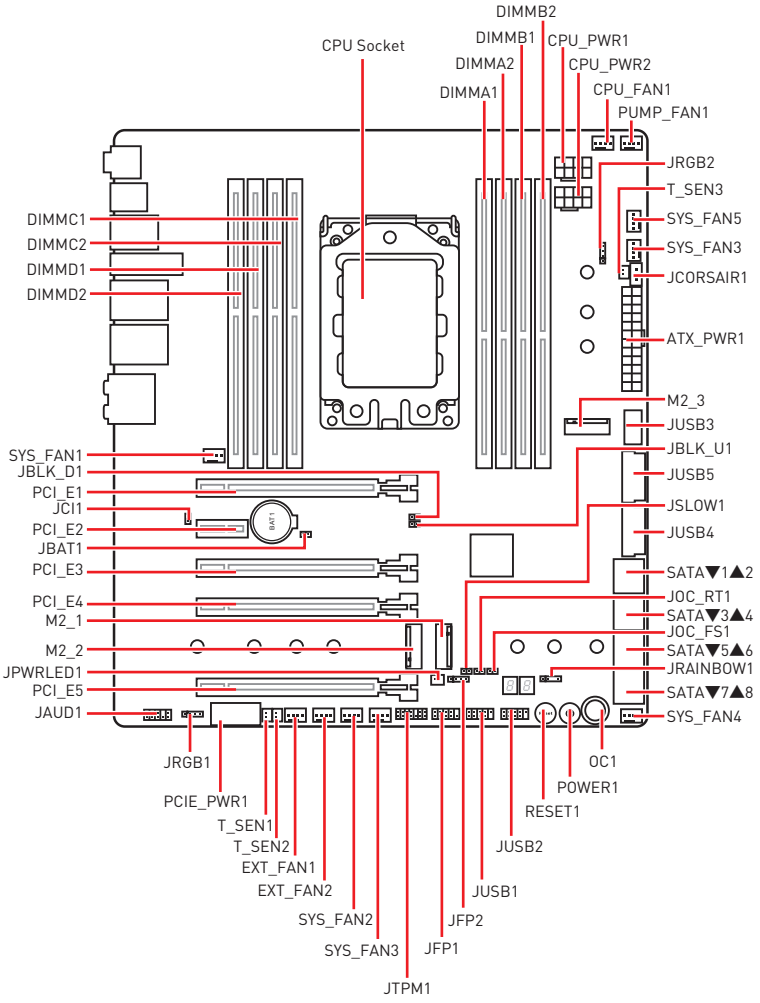

Component Contents

Port Name	Port Type	Page
CPU_FAN1, PUMP_FAN1, SYS_FAN1~5, EXT_FAN1~3	Fan Connectors	47
CPU_PWR1~2, ATX_PWR1, PCIE_PWR1	Power Connectors	44
CPU Socket	Socket TR4	28
DIMMA1~DIMMD2	DIMM Slots	33
JAUD1	Front Audio Connector	49
JBAT1	Clear CMOS (Reset BIOS) Jumper	49
JBLK_U1, JBLK_D1	Base clock Plus, Minus connectors	50
JCI1	Chassis Intrusion Connector	48
JCORSAIR1	CORSAIR Connector	52
JFP1, JFP2	Front Panel Connectors	43
JOC_FS1	OC Force Enter BIOS Jumper	32
JOC_RT1	OC Retry Jumper	32
JPWRLED1	LED light demonstration power input connector	54
JRGB1, JRGB2, JRAINBOW1	RGB LED connectors	51
JSLOW1	Slow Mode Booting Jumper	33
JTPM1	TPM Module Connector	48
JUSB1~2	USB 2.0 Connectors	45
JUSB3	USB 3.1 Gen2 Type-C Connector	46
JUSB4~5	USB 3.1 Gen1 Connectors	45
M2_1~3	M.2 Slots (Key M)	39
OC1	GAME BOOST Knob	31
PCI_E1~5	PCIe Expansion Slots	36
POWER1, RESET1	Power Button, Reset Button	50
SATA1~8	SATA 6Gb/s Connectors	43
T_SEN1~3	Thermal Sensor Connectors	47

CPU Socket

Please use the Torx screwdriver come with the AMD CPU and follow the steps below to install the CPU.

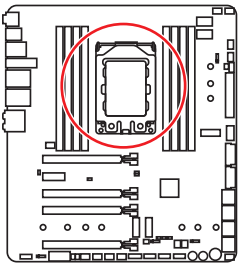

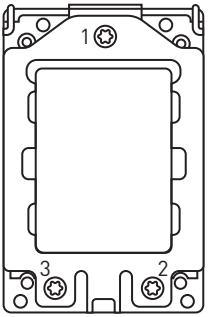

Video Demonstration

Watch the video to learn how to unbox and install AMD Ryzen Threadripper CPU.

https://youtu.be/yk4EpVUU03E

1. Loosen load plate screws with the AMD Torx screwdriver in the sequence 3→2→1. The load plate will automatically lift up to the fully open position.

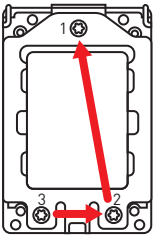

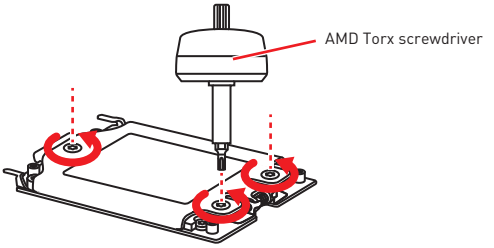

2. Slide out the External Cap from the frame rail, and then slide the Carrier Frame with CPU into the frame rail. Make sure that the Carrier Frame with CPU has been properly installed in the frame rail.

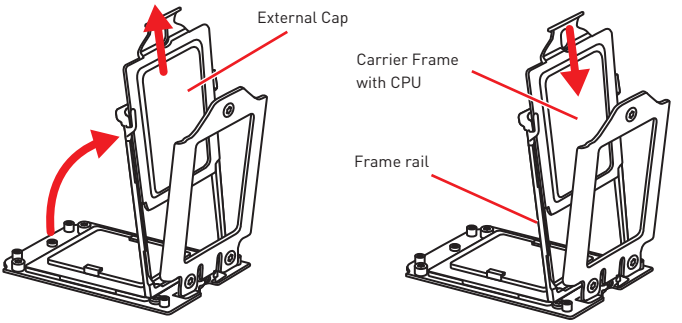

3. Remove the protective pin cap, and then close and buckle the frame rail.

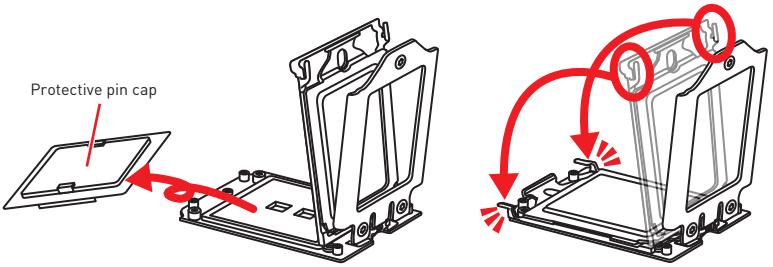

4. Close the load plate, and then turn the load plate screws clockwise a little with the AMD Torx screwdriver in the sequence 1→2→3→1→2→3 until they are snug.

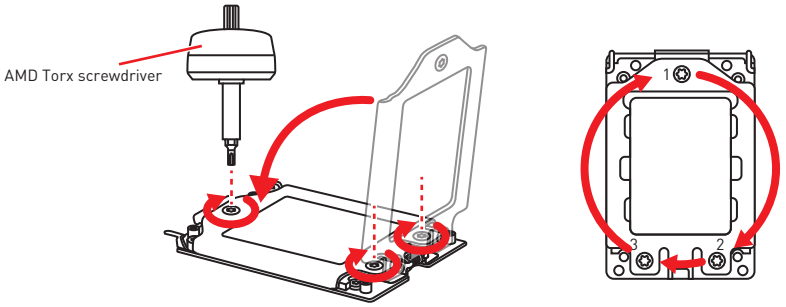

5. Tighten load plate screws until you hear a click from the AMD Torx screwdriver.

Important

If the load plate is not secured properly, the computer will not power on.

6. Apply thermal paste on the top of the CPU.

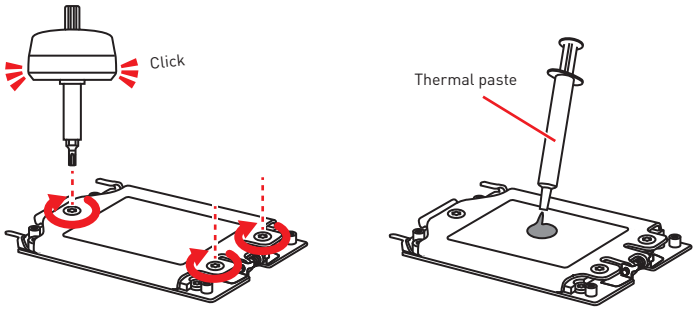

7. Place the heatsink on the motherboard, align the bolts with the mounting nuts on the motherboard. Then, tighten the bolts in a diagonal order to spread the tension properly across the sides.
8. Finally, attach the CPU fan cable to the CPU fan connector on the motherboard.

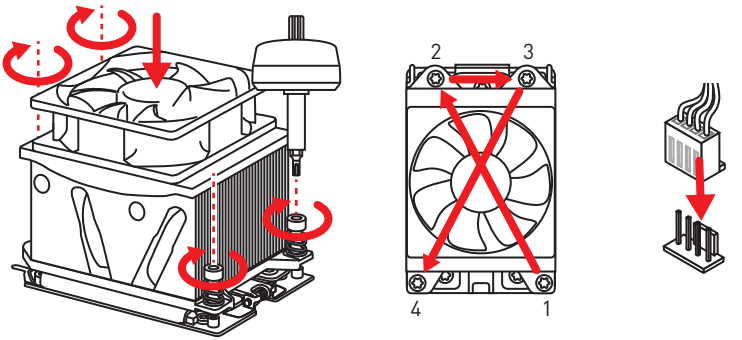

Important

- *Always unplug the power cord from the power outlet before installing or removing the CPU.*
- *Please retain the protective caps after installing the processor. MSI will deal with Return Merchandise Authorization (RMA) requests if only the motherboard comes with the protective caps on the CPU socket.*
- *When installing a CPU, always remember to install a CPU heatsink. A CPU heatsink is necessary to prevent overheating and maintain system stability.*
- *Confirm that the CPU heatsink has formed a tight seal with the CPU before booting your system.*
- *Overheating can seriously damage the CPU and motherboard. Always make sure the cooling fans work properly to protect the CPU from overheating. Be sure to apply an even layer of thermal paste (or thermal tape) between the CPU and the heatsink to enhance heat dissipation.*
- *Whenever the CPU is not installed, always protect the CPU socket pins by covering the socket with the plastic cap.*
- *If you purchased a separate CPU and heatsink/ cooler, Please refer to the documentation in the heatsink/ cooler package for more details about installation.*
- *This motherboard is designed to support overclocking. Before attempting to overclock, please make sure that all other system components can tolerate overclocking. Any attempt to operate beyond product specifications is not recommended. MSI® does not guarantee the damages or risks caused by inadequate operation beyond product specifications.*

OC1: GAME BOOST Knob

This knob allows you to manually select a stage from number 0 (default) to number 11 (extreme) for overclocking the processor. The processor' s voltage and frequency will be automatically adjusted after you power on your computer.

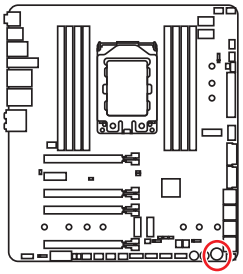

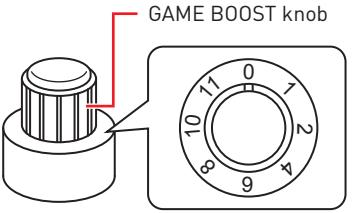

Using GAME BOOST Knob

To setup the GAME BOOST knob, take the following steps:

1. Set the GAME BOOST knob to hardware mode in BIOS Setup.
2. Power off the computer.
3. Rotate the GAME BOOST knob to select the overclocking stage as you desire.

Stage	CPU Frequency			
	Ryzen Threadripper 1950X	Ryzen Threadripper 1920X	Ryzen Threadripper 1920	Ryzen Threadripper 1900X
0	3.4 GHz	3.5 GHz	3.2 GHz	3.8 GHz
1	3.75 GHz	3.85 GHz	3.55 GHz	4.15 GHz
2	3.8 GHz	3.9 GHz	3.6 GHz	4.2 GHz
4	3.85 GHz	3.95 GHz	3.65 GHz	4.25 GHz
6	3.9 GHz	4 GHz	3.7 GHz	4.3 GHz
8	3.95 GHz	4.05 GHz	3.75 GHz	4.35 GHz
10	4 GHz	4.1 GHz	3.8 GHz	4.4 GHz
11	4.1 GHz	4.2 GHz	3.9 GHz	4.5 GHz

Stage	CPU Frequency	
	Ryzen Threadripper 2990WX	Ryzen Threadripper 2950X
0	3.0 GHz	3.5 GHz
1	3.5 GHz	4 GHz
2	3.6 GHz	4.05 GHz
4	3.7 GHz	4.1 GHz
6	3.8 GHz	4.15 GHz
8	3.9 GHz	4.2 GHz
10	4 GHz	4.25 GHz
11	4.1 GHz	4.3 GHz

4. Power on and then GAME BOOST will automatically overclock processor depending on the stage you selected.

To disable GAME BOOST:

1. Set the GAME BOOST knob to HW mode in BIOS Setup.
2. Power off the computer.
3. Rotate the GAME BOOST knob to 0 and then power on. The configuration parameters will be returned to default values.

Important

- *You can also control the GAME BOOST function in **BIOS Setup** or with **MSI COMMAND CENTER** software.*
- *In order to optimize performance and improve system stability, when you activate the GAME BOOST function, please leave the settings in the **BIOS > OC** menu unchanged.*
- *The success of overclocking depends on the components of your computer.*
- *We do not guarantee the GAME BOOST overclocking range or the damages/ risks caused by overclocking behavior.*
- *MSI components are recommended for better compatibility when using GAME BOOST function.*

JOC_RT1: OC Retry Jumper

When you close this jumper, the system will keep retrying OC items until it boot up successfully.

JOC_FS1: OC Force Enter BIOS Jumper

When you close this jumper, the system will be forced access to the BIOS and skip OC failure messages .

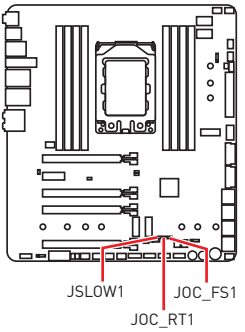

JOC_RT1	Normal (default)	Keep retrying OC
JOC_FS1	Normal (default)	Force access to the BIOS and skip OC failure messages

JSLOW1: Slow Mode Booting Jumper

This jumper is used for LN2 cooling solution, that provides the extreme overclocking conditions, to boot at a stable processor frequency and to prevent the system from crashing.



Normal
(default)



Enabled
(Please enable this jumper during BIOS POST.)

Important

- *Users will try extreme low temperature overclocking at their own risks. The overclocking results will vary according to the CPU version.*
- *Please don't switch to **Enabled** when power-off or the system will be un-bootable.*

DIMM Slots

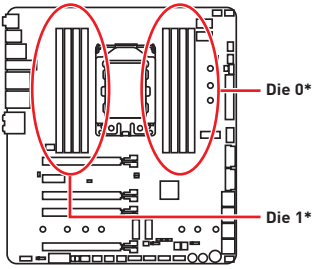

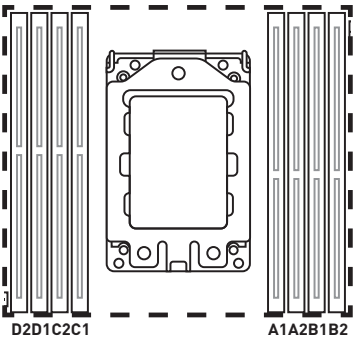

* For 2990WX processor, DIMMC1, C2, D1 and D2 are controlled by Die1 and DIMMA1, A2, B1, B2 are controlled by Die0.

Important

- *To ensure system stability for Dual/ Triple/ Quad channel mode, memory modules must be of the same type, number and density.*
- *Due to chipset resource usage, the available capacity of memory will be a little less than the amount of installed.*
- *The Memory DIMM voltage below 1.35V is suggested to protect the CPU.*
- *Please note that the maximum capacity of addressable memory is 4GB or less for 32-bit Windows OS due to the memory address limitation. Therefore, we recommended that you to install 64-bit Windows OS if you want to install more than 4GB memory on the motherboard.*
- *It is recommended to use a more efficient memory cooling system for full DIMMs installation or overclocking.*
- *The stability and compatibility of installed memory modules depend on installed CPU and devices when overclocking.*

Memory module installation recommendation (For 2990WX processor only)

	D2	D1	C2	C1	CPU Socket	A1	A2	B1	B2
1 DIMM					SocketTR4 CPU (2990WX)		✓		
2 DIMMs			✓				✓		
3 DIMMs			✓				✓		✓
4 DIMMs	✓		✓				✓		✓
8 DIMMs	✓	✓	✓	✓		✓	✓	✓	✓

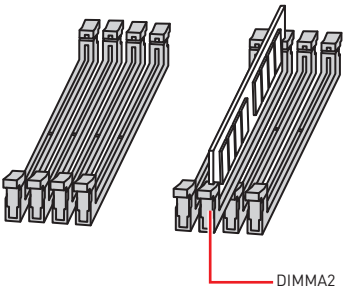

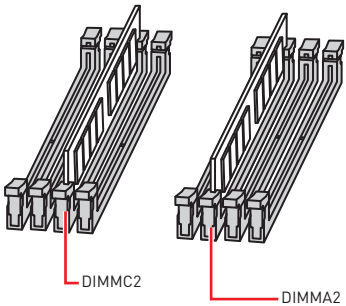

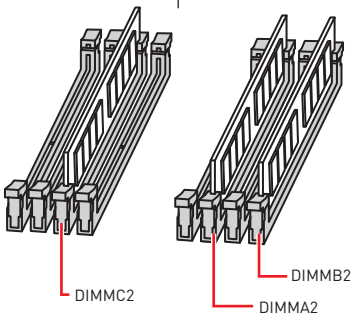

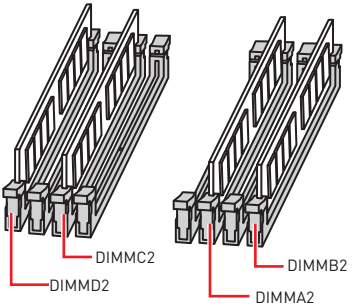

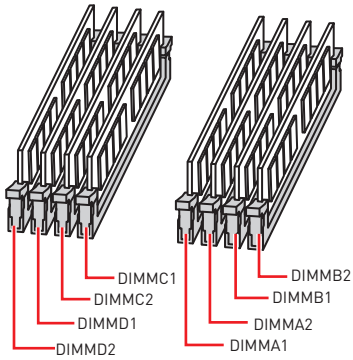

Memory module installation recommendation (Except 2990WX processor)

	D2	D1	C2	C1	CPU Socket	A1	A2	B1	B2
1 DIMM					SocketTR4 CPU				✓
2 DIMMs	✓								✓
3 DIMMs	✓						✓		✓
4 DIMMs	✓		✓				✓		✓
8 DIMMs	✓	✓	✓	✓		✓	✓	✓	✓

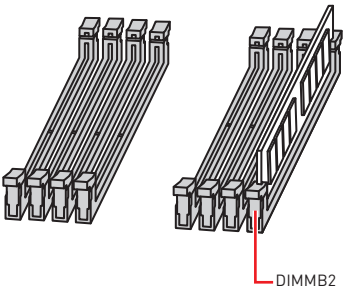

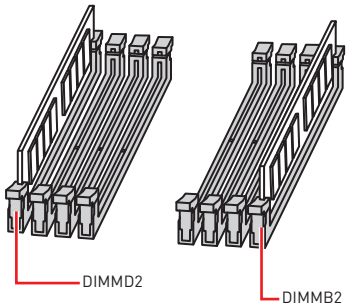

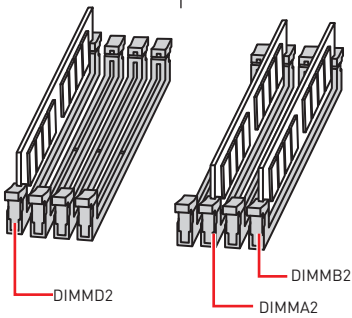

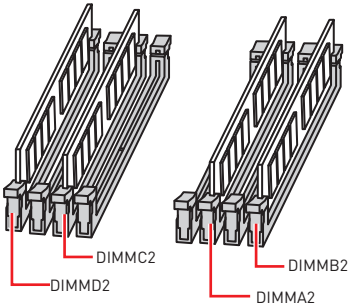

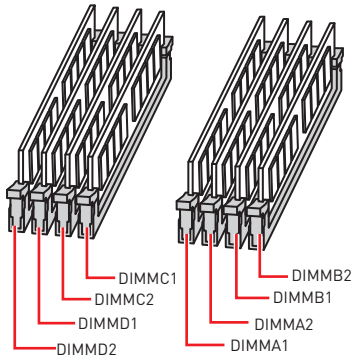

PCI_E1~5: PCIe Expansion Slots

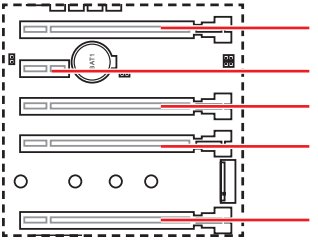

PCI_E1: PCIe 3.0 x16

PCI_E2: PCIe 2.0 x1

PCI_E3: PCIe 3.0 x8

PCI_E4: PCIe 3.0 x16

PCI_E5: PCIe 3.0 x8

Multiple graphics cards recommendation (For 2990WX processor only)

Graphics Card	Single	2-Way	3-Way
PCI_E1 (CPU Die 1)		✓	✓
PCI_E2 (Promontory)	PCIe x1 slot		
PCI_E3 (CPU Die 1)			
PCI_E4 (CPU Die 0)	✓	✓	✓
PCI_E5 (CPU Die 0)			✓

Multiple graphics cards recommendation (Except 2990WX processor)

Graphics Card	Single	2-Way	3-Way
PCI_E1	✓	✓	✓
PCI_E3			
PCI_E4		✓	✓
PCI_E5			✓

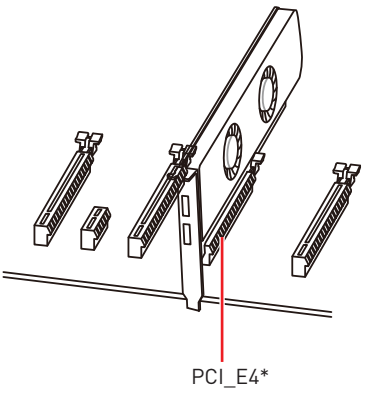

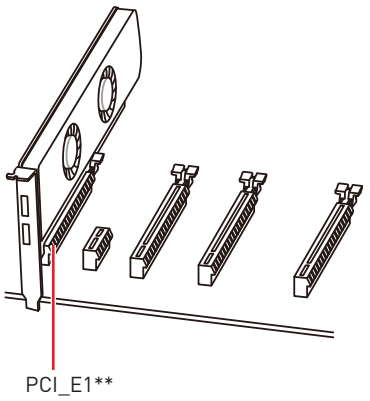

* Single card installation for 2990WX processor only.

** Single card installation except 2990WX processor.

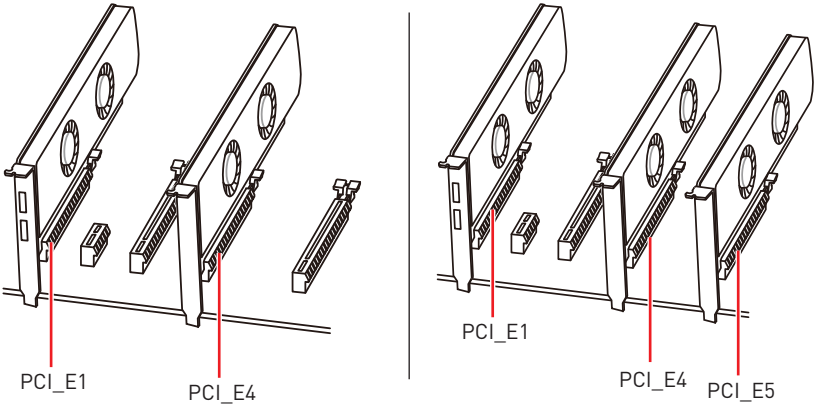

Important

• *If you install a large and heavy graphics card, you need to use a tool such as* ***MSI Gaming Series Graphics Card Bolster*** *to support its weight and to prevent deformation of the slot.*

• *When adding or removing expansion cards, always turn off the power supply and unplug the power supply power cable from the power outlet. Read the expansion card' s documentation to check for any necessary additional hardware or software changes.*

Installing SLI graphics cards

For power supply recommendations for SLI configurations, please refer to the user guide of your graphics card to make sure you meet all the system requirements.

To install SLI graphics cards:

1. Turn off your computer and disconnect the power cord, install two graphics cards into the **PCI_E1** and **PCI_E4** slots.
2. Connect the two cards together using the **SLI Bridge Connector.**

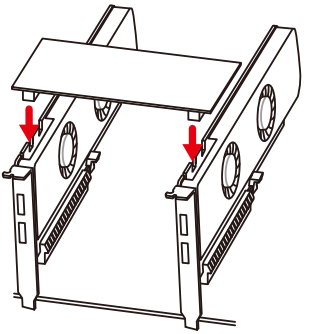

3. Connect all PCIe power connectors of the graphics cards.
4. Reconnect the power cord, power up the computer and install the drivers and software included in your graphics card package.
5. Right-click the Windows desktop and select **NVIDIA Control Panel** from the menu, click on **Configure SLI, Surround, PhysX** in the left task pane and select **Maximize 3D performance** in the SLI configuration menu, and then click **Apply**.

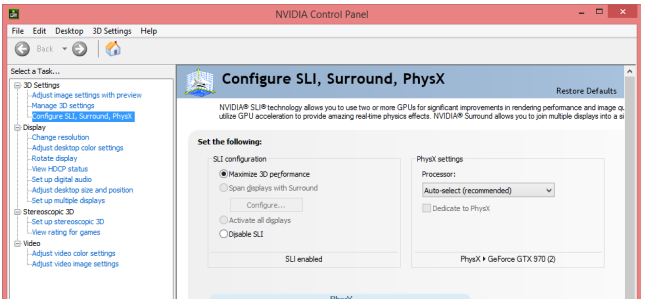

M2_1~3: M.2 Slots (Key M)

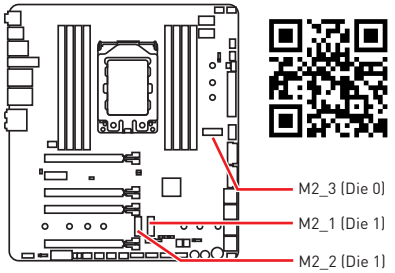

Video Demonstration

Watch the video to learn how to Install M.2 device.

http://youtu.be/JCTFABytrYA

* For 2990WX processor, M2_1 and M2_2 slots are controlled by Die1, and M2_3 is controlled by Die0.

M.2 SHIELD FROZR1 & M.2 SHIELD FROZR2

We provide the M.2 SHIELD FROZRs on the M.2 slots to help dissipate the heat away from the M.2 devices. Before installing M.2 devices, please remove the M.2 SHIELD FROZR 1 and M.2 SHIELD FROZR 2 by loosening the heatsink screws first. After installing all necessary M.2 devices, reinstall the M.2 SHIELD FROZR 1 and M.2 SHIELD FROZR 2 by tightening the heatsink screws.

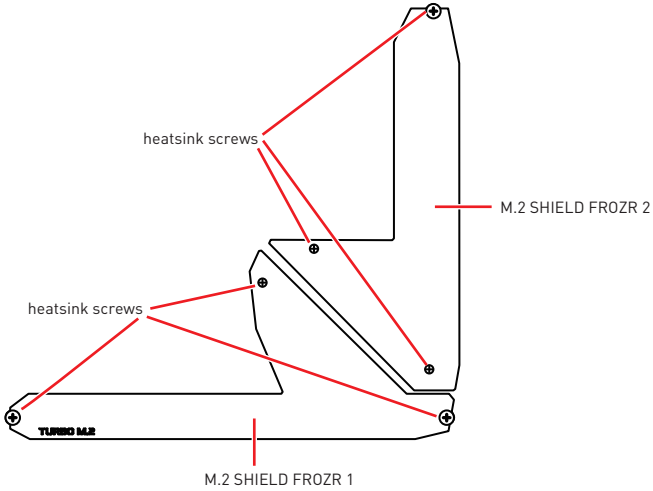

Important

- *If you want to use the mounting screw hole under the M.2 SHIELD FROZR 2, please remove the M.2 SHIELD FROZR 2 first.*
- *Before reinstalling M.2 SHIELD FROZRs, remember to remove the protective films and the round rubbers from the thermal pad on the M.2 SHIELD FROZRs for M.2 devices to get heat dispersion.*



Installing M.2 device

1. Loosen the M.2 riser screw from the motherboard.
2. Move and fasten the M.2 riser screw to the appropriate location for your M.2 SSD.
3. Insert your M.2 SSD into the M.2 slot at a 30-degree angle.
4. Secure the M.2 SSD in place with the supplied M.2 screw.

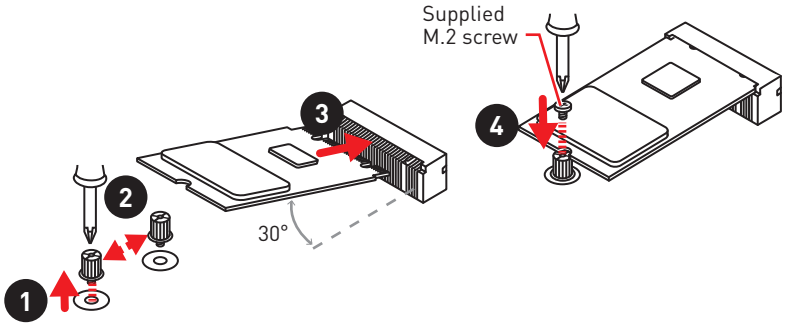

CAUTION

*For the installation of **M2_2** slot with **22110** M.2 device, **M2_1** slot with **2280** M.2 device or **M2_3** slot with **2280** M.2 device, you need to **remove** the **unnecessary** base screw to prevent damage to the M.2 device. Please follow the steps below.*

The installation of M2_2 slot with 22110 M.2 device, M2_1 slot with 2280 M.2 device or M2_3 slot with 2280 M.2 device

1. Remove the **unnecessary** base screw between the M.2 slot and the necessary base screw.
2. Insert the M.2 device into the M.2 slot at a 30-degree angle. Make sure there is only one base screw under the trailing edge of M.2 device.
3. Reinstall the M.2 SHIELD FROZRs onto the M.2 device and screw the M.2 SHIELD FROZRs in place with the heatsink screws.

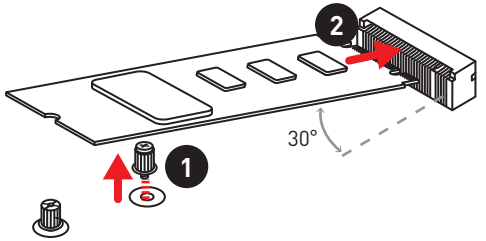

Installing M.2 XPANDER-AERO card

The M.2 XPANDER-AERO card provide four M.2 Key-M slots.

To install the M.2 XPANDER-AERO card, please follows the steps below:

1. Remove the heatsink by loosening four heatsink screws on the bottom of M.2 XPENDER-AERO.

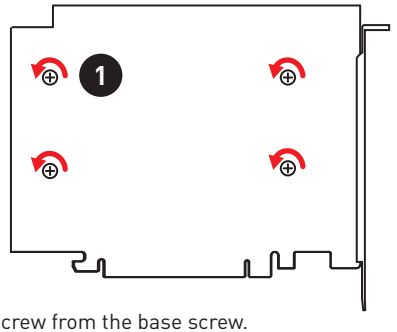

2. Loosen the M.2 screw from the base screw.
3. Loosen the base screw.
4. Move and fasten the base screw to the appropriate location for your M.2 device.
5. Insert your M.2 device into the M.2 slot at a 30-degree angle.
6. Secure the M.2 device in place with the M.2 screw.

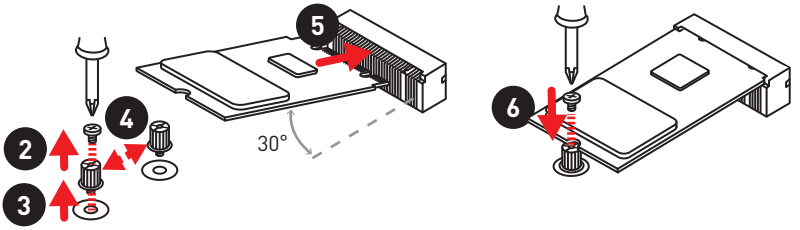

7. Remove the protective film from the thermal pad of the heatsink.
8. Reinstall and secure the heatsink with four heatsink screws.

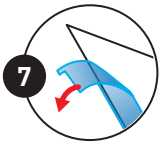

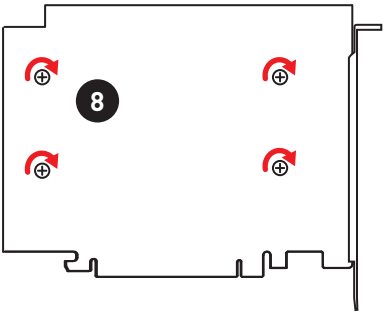

9. Insert the M.2 XPENDER-AERO into an PCIe x16 slot (PCI_E1 or PCI_E4).
10. Use the screw to secure the M.2 XPENDER-AERO.

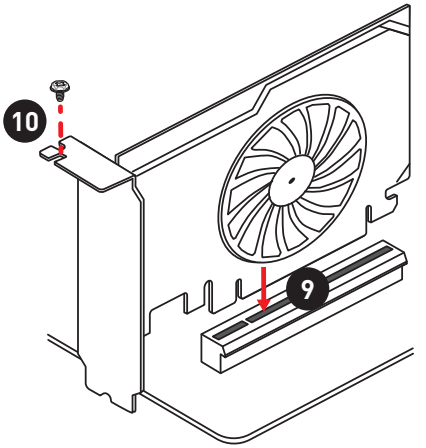

11. Connect the PCIE_PWR1 connector to the power supply.
12. Connect the case' s HDD LED cable to the JCASE connector.
13. Using the supplied HDD LED cable to connect the JMB connector and HDD LED pins (pin 1 & pin3) of JFP1.

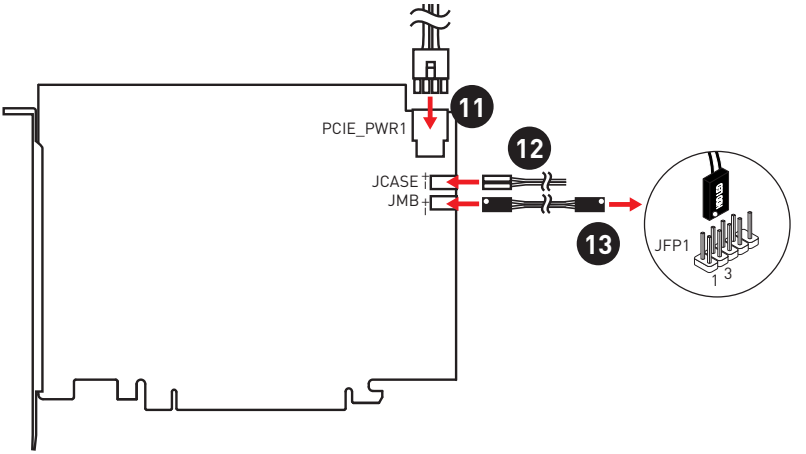

SATA1~8: SATA 6Gb/s Connectors

These connectors are SATA 6Gb/s interface ports. Each connector can connect to one SATA device.

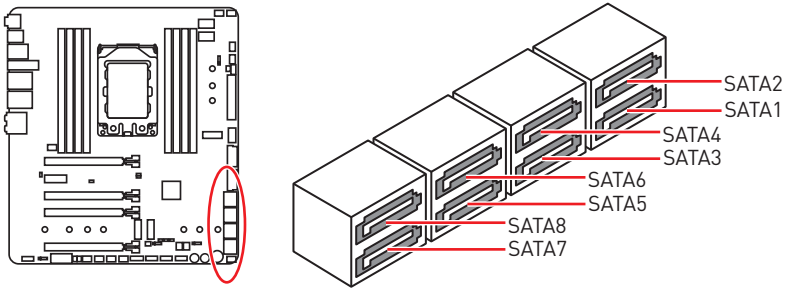

Important

- *Please do not fold the SATA cable at a 90-degree angle. Data loss may result during transmission otherwise.*
- *SATA cables have identical plugs on either sides of the cable. However, it is recommended that the flat connector be connected to the motherboard for space saving purposes.*

JFP1, JFP2: Front Panel Connectors

These connectors connect to the switches and LEDs on the front panel.

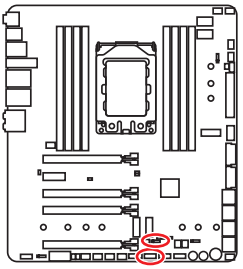

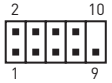

JFP1

1	HDD LED +	2	Power LED +
3	HDD LED -	4	Power LED -
5	Reset Switch	6	Power Switch
7	Reset Switch	8	Power Switch
9	Reserved	10	No Pin



JFP2

1	Speaker -	2	Buzzer +
3	Buzzer -	4	Speaker +

CPU_PWR1~2, ATX_PWR1, PCIE_PWR1: Power Connectors

These connectors allow you to connect an ATX power supply.

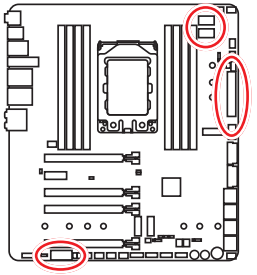



CPU_PWR1/
CPU_PWR2

1	Ground	5	+12V
2	Ground	6	+12V
3	Ground	7	+12V
4	Ground	8	+12V

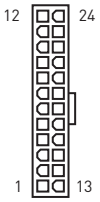

ATX_PWR1

1	+3.3V	13	+3.3V
2	+3.3V	14	-12V
3	Ground	15	Ground
4	+5V	16	PS-ON#
5	Ground	17	Ground
6	+5V	18	Ground
7	Ground	19	Ground
8	PWR OK	20	Res
9	5VSB	21	+5V
10	+12V	22	+5V
11	+12V	23	+5V
12	+3.3V	24	Ground



PCIE_PWR1

1	+12V	3	Ground
2	Ground	4	+5V

Important

- *Make sure that all the power cables are securely connected to a proper ATX power supply to ensure stable operation of the motherboard.*
- *It is recommended that connect both CPU_PWR1 and CPU_PWR2 to 12V power supply (especially when overclocking).*
- *It is recommended to use a power supply with more than 500W.*

JUSB1~2: USB 2.0 Connectors

These connectors allow you to connect USB 2.0 ports on the front panel.

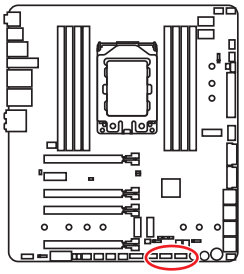

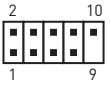

1	VCC	2	VCC
3	USB0-	4	USB1-
5	USB0+	6	USB1+
7	Ground	8	Ground
9	No Pin	10	NC

Important

- *Note that the VCC and Ground pins must be connected correctly to avoid possible damage.*
- *In order to recharge your iPad,iPhone and iPod through USB ports, please install MSI® SUPER CHARGER utility.*

JUSB4~5: USB 3.1 Gen1 Connectors

These connectors allow you to connect USB 3.1 Gen1 ports on the front panel.

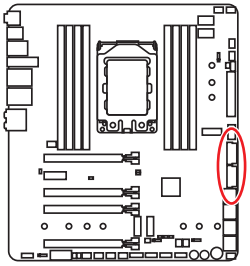

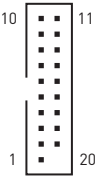

1	Power	11	USB2.0+
2	USB3_RX_DN	12	USB2.0-
3	USB3_RX_DP	13	Ground
4	Ground	14	USB3_TX_C_DP
5	USB3_TX_C_DN	15	USB3_TX_C_DN
6	USB3_TX_C_DP	16	Ground
7	Ground	17	USB3_RX_DP
8	USB2.0-	18	USB3_RX_DN
9	USB2.0+	19	Power
10	NC	20	No Pin

Important

Note that the Power and Ground pins must be connected correctly to avoid possible damage.

Charger Port

The **JUSB5** connector is a charger port which can increase USB power output for fast charging your smartphone or USB-powered devices. The Charger Port is hardware controlled by motherboard chip, it can still charge your device in suspend, hibernate state or even shutdown states. However, when you boot the computer into Windows®, you will need to install the MSI® SUPER CHARGER application to turn ON/OFF the Charging mode.



Video Demonstration

Watch the video to learn how to charge the smartphone with Super-Charger.

http://youtu.be/FCyvjr5NbOw

Important

When the Charging mode is enabled, the Charger Port data syncing will be disabled.

JUSB3: USB 3.1 Gen2 Type-C Connector

This connector allows you to connect USB 3.1 Gen2 Type-C connector on the front panel. The connector possesses a foolproof design. When you connect the cable, be sure to connect it with the corresponding orientation.

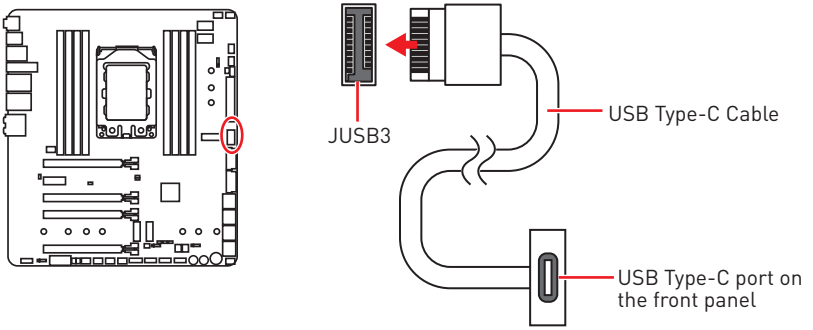

CPU_FAN1, PUMP_FAN1, SYS_FAN1~5, EXT_FAN1~3: Fan Connectors

Fan connectors can be classified as PWM (Pulse Width Modulation) Mode or DC Mode. PWM Mode fan connectors provide constant 12V output and adjust fan speed with speed control signal. DC Mode fan connectors control fan speed by changing voltage. This motherboard can automatically detect PWM and DC mode. However, you can follow the instruction below to adjust the fan connector to PWM or DC Mode manually.

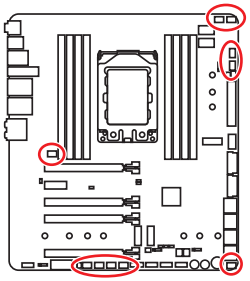



CPU_FAN1
(Default : Auto-detection Mode)



PUMP_FAN1
(Default : PWM Mode)

Default DC Mode fan connectors



SYS_FAN1/ SYS_FAN2/ SYS_FAN3/ SYS_FAN4/ EXT_FAN1/ EXT_FAN2



SYS_FAN5/ EXT_FAN3

Important

- *You can switch between PWM mode and DC mode and adjust fan speed in **BIOS > HARDWARE MONITOR**.*
- *Make sure fans are working properly after switching the PWM/ DC mode.*

Pin definition of fan connectors

PWM Mode pin definition			
1	Ground	2	+12V
3	Sense	4	Speed Control Signal

DC Mode pin definition			
1	Ground	2	Voltage Control
3	Sense	4	NC

T_SEN1~3: Thermal Sensor Connectors

These connectors allow you to connect the thermistor cable and use it to monitor the temperature of the detection point.

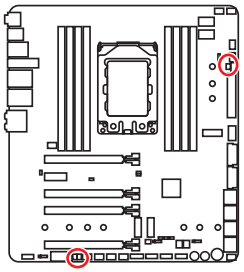

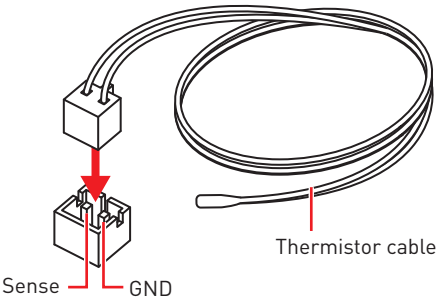

JCI1: Chassis Intrusion Connector

This connector allows you to connect the chassis intrusion switch cable.

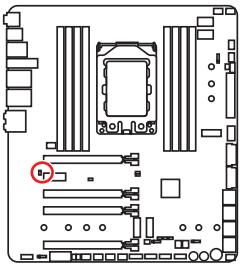



Normal (default)



Trigger the chassis intrusion event

Using chassis intrusion detector

1. Connect the **JCI1** connector to the chassis intrusion switch/ sensor on the chassis.
2. Close the chassis cover.
3. Go to **BIOS > SETTINGS > Security > Chassis Intrusion Configuration**.
4. Set **Chassis Intrusion** to **Enabled**.
5. Press **F10** to save and exit and then press the **Enter** key to select **Yes**.
6. Once the chassis cover is opened again, a warning message will be displayed on screen when the computer is turned on.

Resetting the chassis intrusion warning

1. Go to **BIOS > SETTINGS > Security > Chassis Intrusion Configuration**.
2. Set **Chassis Intrusion** to **Reset**.
3. Press **F10** to save and exit and then press the **Enter** key to select **Yes**.

JTPM1: TPM Module Connector

This connector is for TPM (Trusted Platform Module). Please refer to the TPM security platform manual for more details and usages.

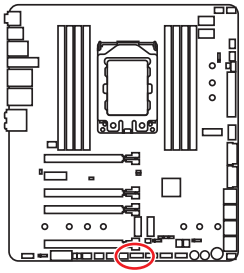

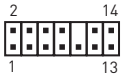

1	LPC Clock	2	3V Standby power
3	LPC Reset	4	3.3V Power
5	LPC address & data pin0	6	Serial IRQ
7	LPC address & data pin1	8	5V Power
9	LPC address & data pin2	10	No Pin
11	LPC address & data pin3	12	Ground
13	LPC Frame	14	Ground

JAUD1: Front Audio Connector

This connector allows you to connect audio jacks on the front panel.

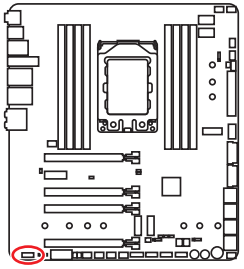

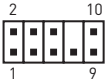

1	MIC L	2	Ground
3	MIC R	4	NC
5	Head Phone R	6	MIC Detection
7	SENSE_SEND	8	No Pin
9	Head Phone L	10	Head Phone Detection

JBAT1: Clear CMOS (Reset BIOS) Jumper

There is CMOS memory onboard that is external powered from a battery located on the motherboard to save system configuration data. If you want to clear the system configuration, set the jumper to clear the CMOS memory.

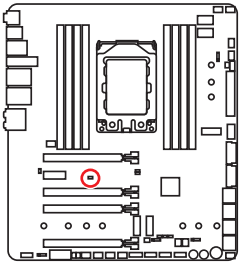



Keep Data
(default)



Clear CMOS/
Reset BIOS

Resetting BIOS to default values

1. Power off the computer and unplug the power cord
2. Use a jumper cap to short JBAT1 for about 5-10 seconds.
3. Remove the jumper cap from JBAT1.
4. Plug the power cord and power on the computer.

JBLK_U1, JBLK_D1: Base clock Plus, Minus connectors

You can use these connectors to connect the external buttons. Press the button connecting to JBLK_U1 to increase the CPU base clock or press the button connecting to JBLK_D1 to decrease the CPU base clock.

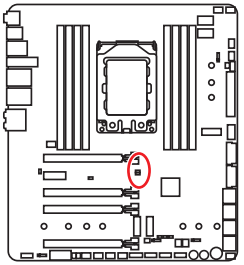

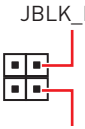

POWER1, RESET1: Power Button, Reset Button

The Power / Reset button allows you to power on / reset the computer.

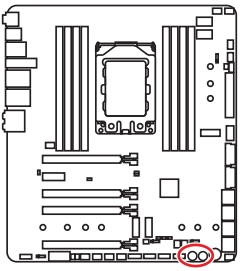



Reset button



Power button

JRGB1, JRGB2, JRAINBOW1: RGB LED connectors

The JRGB1/ JRGB2 connector allows you to connect the 5050 RGB LED strips 12V. The JRAINBOW1 connector allows you to connect the WS2812B Individually Addressable RGB LED strips 5V.

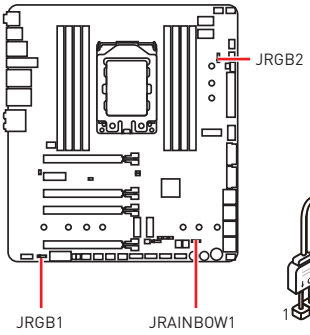

JRGB1/ JRGB2

1	+12V	2	G
3	R	4	B

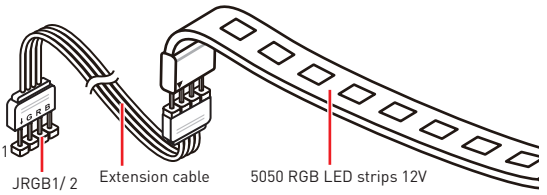

JRAINBOW1

1	+5V	2	Data
3	No Pin	4	Ground

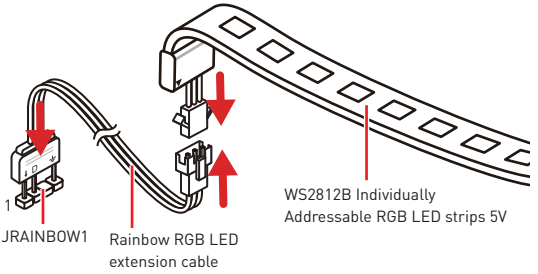

CAUTION

Do not connect the wrong type of LED strips. The JRGB1/ JRGB2 connector and the JRAINBOW1 connector provide different voltages, and connecting the 5V LED strip to the JRGB1/ JRGB2 connector will result in damage to the LED strip.

Important

- *The JRGB1/ JRGB2 connector supports up to 2 meters continuous 5050 RGB LED strips (12V/G/R/B) with the maximum power rating of 3A (12V).*
- *The JRAINBOW1 connector supports up to 72 LEDs WS2812B Individually Addressable RGB LED strips (5V/Data/Ground) with the maximum power rating of 3A (5V).*
- *Always turn off the power supply and unplug the power cord from the power outlet before installing or removing the RGB LED strip.*
- *Please use MSI's software to control the extended LED strip.*

JCORSAIR1: CORSAIR Connector

The JCORSAIR1 connector allows you to connect the CORSAIR Individually Addressable Lighting PRO RGB LED strips 5V or CORSAIR RGB fans with the CORSAIR fan hub. Once all items are connected properly, you can control the CORSAIR RGB LED strips and fans with MSI's software.

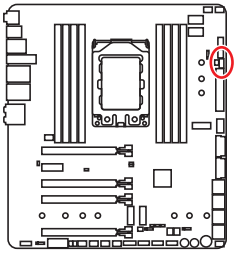

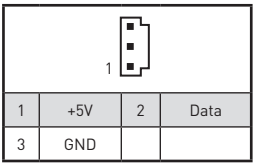

1	+5V	2	Data
3	GND		

CORSAIR RGB Fan Connection

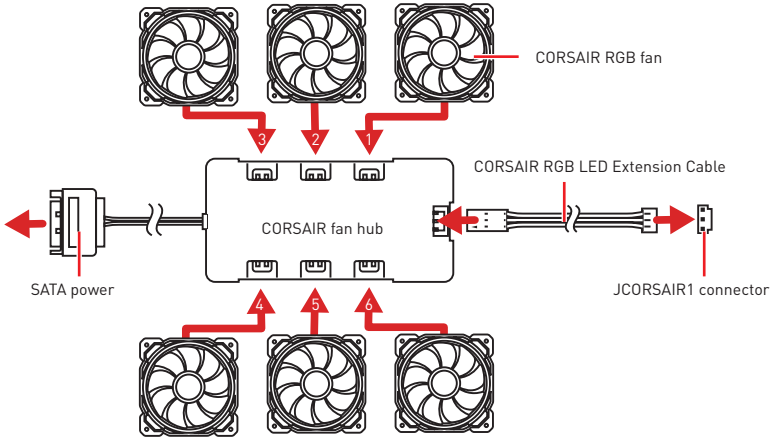

Important

Fans must start at 1 and continue in series. 1 > 2 > 3 > 4 > 5 > 6. Any fan not connected in series will break communication and the RGB LED lighting function will not work.

CORSAIR Lighting PRO RGB LED Strip Connection

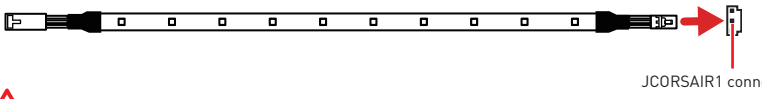

Important

- *Quantity of RGB Fans or Lighting PRO RGB LED strips supported may differ between models. Please refer to the motherboard specification.*
- *CORSAIR RGB Fan and CORSAIR Lighting PRO RGB LED strip can't be used at the same time.*

Onboard LEDs

EZ Debug LED

These LEDs indicate the debug status of the motherboard.

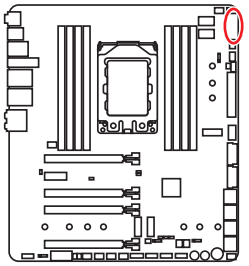

- **CPU** - indicates CPU is not detected or fail.
- **DRAM** - indicates DRAM is not detected or fail.
- **VGA** - indicates GPU is not detected or fail.
- **BOOT** - indicates the booting device is not detected or fail.

DIMM LEDs

These LED indicate the memory modules are installed.

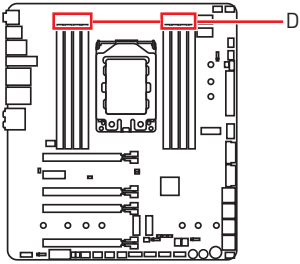

Fan LEDs

These LEDs indicate the fan control mode.

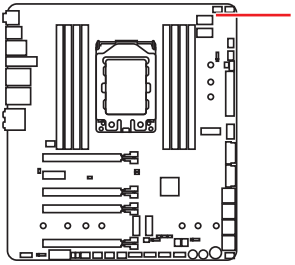

LED color	Fan control mode
Red	PWM mode
Green	DC mode

JPWRLED1: LED light demonstration power input connector

This connector is used by retailers to demonstrate onboard LED lights.

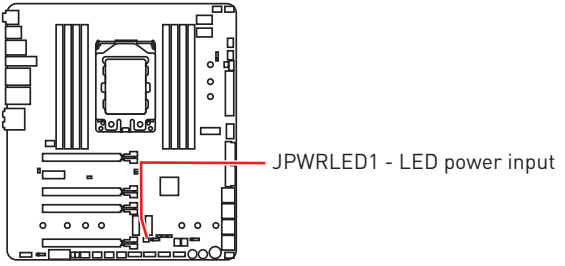

Debug Code LED

The Debug Code LED displays progress and error codes during and after POST. Refer to the Debug Code LED table for details.

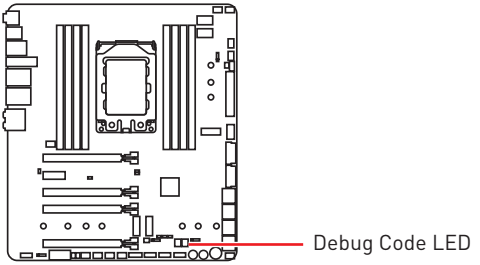

Hexadecimal Character Table

Hexadecimal	0	1	2	3	4	5	6	7	8	9	A	B	C	D	E	F
Debug Code LED display	0	1	2	3	4	5	6	7	8	9	A	b	C	d	E	F

Boot Phases

Security (SEC) – initial low-level initialization

Pre-EFI Initialization (PEI) – memory initialization

Driver Execution Environment (DXE) – main hardware initialization

Boot Device Selection (BDS) – system setup, pre-OS user interface & selecting a bootable device (CD/DVD, HDD, USB, Network, Shell, ...)

Debug Code LED Table

SEC Progress Codes

01	Power on. Reset type detection (soft/ hard)
02	AP initialization before microcode loading
03	System Agent initialization before microcode loading
04	PCH initialization before microcode loading
06	Microcode loading
07	AP initialization after microcode loading
08	System Agent initialization after microcode loading
09	PCH initialization after microcode loading
0B	Cache initialization

SEC Error Codes

0C - 0D	Reserved for future AMI SEC error codes
0E	Microcode not found
0F	Microcode not loaded

PEI Progress Codes

10	PEI Core is started
11	Pre-memory CPU initialization is started
12 - 14	Pre-memory CPU initialization (CPU module specific)
15	Pre-memory System Agent initialization is started
16 - 18	Pre-Memory System Agent initialization (System Agent module specific)
19	Pre-memory PCH initialization is started
1A - 1C	Pre-memory PCH initialization (PCH module specific)
2B	Memory initialization. Serial Presence Detect (SPD) data reading
2C	Memory initialization. Memory presence detection
2D	Memory initialization. Programming memory timing information
2E	Memory initialization. Configuring memory
2F	Memory initialization (other)
31	Memory Installed
32	CPU post-memory initialization is started
33	CPU post-memory initialization. Cache initialization
34	CPU post-memory initialization. Application Processor(s) (AP) initialization
35	CPU post-memory initialization. Boot Strap Processor (BSP) selection
36	CPU post-memory initialization. System Management Mode (SMM) initialization
37	Post-Memory System Agent initialization is started
38 - 3A	Post-Memory System Agent initialization (System Agent module specific)
3B	Post-Memory PCH initialization is started
3C - 3E	Post-Memory PCH initialization (PCH module specific)
4F	DXE IPL is started

PEI Error Codes

4B	Memory not installed (For Summit CPU)
E0	Memory not installed (For Bristol CPU)

DXE Progress Codes

60	DXE Core is started
61	NVRAM initialization
62	Installation of the PCH Runtime Services
63	CPU DXE initialization is started
64 - 67	CPU DXE initialization (CPU module specific)
68	PCI host bridge initialization
69	System Agent DXE initialization is started
6A	System Agent DXE SMM initialization is started
6B - 6F	System Agent DXE initialization (System Agent module specific)
70	PCH DXE initialization is started
71	PCH DXE SMM initialization is started
72	PCH devices initialization
73 - 77	PCH DXE Initialization (PCH module specific)
78	ACPI module initialization
79	CSM initialization
7A - 7F	Reserved for future AMI DXE codes
90	Boot Device Selection (BDS) phase is started
91	Driver connecting is started
92	PCI Bus initialization is started
93	PCI Bus Hot Plug Controller Initialization

94	PCI Bus Enumeration 32
95	PCI Bus Request Resources
96	PCI Bus Assign Resources
97	Console Output devices connect
98	Console input devices connect
99	Super IO Initialization
9A	USB initialization is started
9B	USB Reset
9C	USB Detect
9D	USB Enable
9E -9F	Reserved for future AMI codes
A0	IDE initialization is started
A1	IDE Reset
A2	IDE Detect
A3	IDE Enable
A4	SCSI initialization is started
A5	SCSI Reset
A6	SCSI Detect
A7	SCSI Enable
A8	Setup Verifying Password
A9	Start of Setup
AB	Setup Input Wait
AD	Ready To Boot event
AE	Legacy Boot event
AF	Exit Boot Services event
B0	Runtime Set Virtual Address MAP Begin
B1	Runtime Set Virtual Address MAP End
B2	Legacy Option ROM Initialization
B3	System Reset
B4	USB hot plug
B5	PCI bus hot plug
B6	Clean-up of NVRAM
B7	Configuration Reset (reset of NVRAM settings)
B8 - BF	Reserved for future AMI codes

DXE Error Codes

D0	CPU initialization error
D1	System Agent initialization error
D2	PCH initialization error
D3	Some of the Architectural Protocols are not available
D4	PCI resource allocation error. Out of Resources
D5	No Space for Legacy Option ROM
D6	No Console Output Devices are found
D7	No Console Input Devices are found
D8	Invalid password
D9	Error loading Boot Option (LoadImage returned error)
DA	Boot Option is failed (StartImage returned error)
DB	Flash update is failed
DC	Reset protocol is not available

S3 Resume Progress Codes

E0	S3 Resume is stared (S3 Resume PPI is called by the DXE IPL)
E1	S3 Boot Script execution
E2	Video repost
E3	OS S3 wake vector call
E4 - E7	Reserved for future AMI progress codes

S3 Resume Error Codes

E8	S3 Resume Failed
E9	S3 Resume PPI not Found
EA	S3 Resume Boot Script Error
EB	S3 OS Wake Error
EC - EF	Reserved for future AMI error codes

Recovery Progress Codes

F0	Recovery condition triggered by firmware (Auto recovery)
F1	Recovery condition triggered by user (Forced recovery)
F2	Recovery process started
F3	Recovery firmware image is found
F4	Recovery firmware image is loaded
F5 - F7	Reserved for future AMI progress codes

Recovery Error Codes

F8	Recovery PPI is not available
F9	Recovery capsule is not found
FA	Invalid recovery capsule
FB - FF	Reserved for future AMI error codes

ACPI States Codes

The following codes appear after booting and the operating system into ACPI modes.

01	System is entering S1 sleep state
02	System is entering S2 sleep state
03	System is entering S3 sleep state
04	System is entering S4 sleep state
05	System is entering S5 sleep state
10	System is waking up from the S1 sleep state
20	System is waking up from the S2 sleep state
30	System is waking up from the S3 sleep state
40	System is waking up from the S4 sleep state
AC	System has transitioned into ACPI mode. Interrupt controller is in PIC mode.
AA	System has transitioned into ACPI mode. Interrupt controller is in APIC mode.

BIOS Setup

The default settings offer the optimal performance for system stability in normal conditions. You should **always keep the default settings** to avoid possible system damage or failure booting unless you are familiar with BIOS.

Important

• *BIOS items are continuously update for better system performance. Therefore, the description may be slightly different from the latest BIOS and should be for reference only. You could also refer to the **HELP** information panel for BIOS item description.*

• *The pictures in this chapter are for reference only and may vary from the product you purchased.*

Entering BIOS Setup

Press **Delete** key, when the **Press DEL key to enter Setup Menu, F11 to enter Boot Menu** message appears on the screen during the boot process.

Function key

F1: General Help

F2: Add/ Remove a favorite item

F3: Enter Favorites menu

F4: Enter CPU Specifications menu

F5: Enter Memory-Z menu

F6: Load optimized defaults

F7: Switch between Advanced mode and EZ mode

F8: Load Overclocking Profile

F9: Save Overclocking Profile

F10: Save Change and Reset*

F12: Take a screenshot and save it to USB flash drive (FAT/ FAT32 format only).

Ctrl+F: Enter Search page

* When you press F10, a confirmation window appears and it provides the modification information. Select between Yes or No to confirm your choice.

Resetting BIOS

You might need to restore the default BIOS setting to solve certain problems. There are several ways to reset BIOS:

- Go to BIOS and press **F6** to load optimized defaults.
- Short the **Clear CMOS** jumper on the motherboard.

Important

*Be sure the computer is off before clearing CMOS data. Please refer to the **Clear CMOS** jumper section for resetting BIOS.*

Updating BIOS

Updating BIOS with M-FLASH

Before updating:

Please download the latest BIOS file that matches your motherboard model from MSI website. And then save the BIOS file into the USB flash drive.

Updating BIOS:

1. Press Del key to enter the BIOS Setup during POST.
2. Insert the USB flash drive that contains the update file into the computer.
3. Select the **M-FLASH** tab and click on **Yes** to reboot the system and enter the flash mode.
4. Select a BIOS file to perform the BIOS update process.
5. After the flashing process is 100% completed, the system will reboot automatically.

Updating the BIOS with Live Update 6

Before updating:

Make sure the LAN driver is already installed and the Internet connection is set properly.

Updating BIOS:

1. Install and launch MSI LIVE UPDATE 6.
2. Select **BIOS Update**.
3. Click on **Scan** button.
4. Click on **Download** icon to download and install the latest BIOS file.
5. Click **Next** and choose **In Windows mode**. And then click **Next** and **Start** to start updating BIOS.
6. After the flashing process is 100% completed, the system will restart automatically.

Updating BIOS with BIOS FLASHBACK+

Before updating:

Please download the latest BIOS file that matches your motherboard model from MSI® website and rename the BIOS file to **MSI.ROM**. And then, save the **MSI.ROM** file to the root of USB flash drive.

Important

*Only the FAT32 format USB flash drive supports updating BIOS by **BIOS FLASHBACK+**.*

1. Connect power supply to **CPU_PWR1, CPU_PWR2** and **ATX_PWR1**. (No other components are necessary but power supply.)
2. Plug the USB flash drive that contains the MSI.ROM file into the BIOS FLASHBACK+ port on rear I/O panel.
3. Press the BIOS FLASHBACK+ button to flash BIOS, and the light of BIOS FLASHBACK+ button starts flashing.
4. After the flashing BIOS process is 100% completed, the button light would stop flashing and would be off simultaneously.

EZ Mode

At EZ mode, it provides the basic system information and allows you to configure the basic setting. To configure the advanced BIOS settings, please enter the Advanced Mode by pressing the **Setup Mode switch** or **F7** function key.

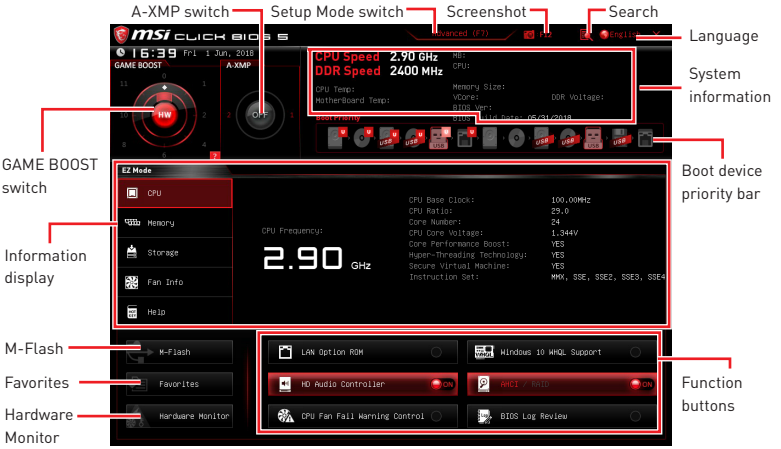

• **GAME BOOST switch** - click on the center button to switch **GAME BOOST** control between **software** (**SW**) and **hardware** (**HW**) . The inner circle represents the current stage of hardware GAME BOOST and the outer circle stands for software. You can read the CPU frequency of each GAME BOOST stage by clicking on the ? icon at right-bottom corner.

Important

*Please don't make any changes in OC menu and don't load defaults to keep the optimal performance and system stability after activating the **GAME BOOST** function.*

• **A-XMP switch (optional)** - click on the inner circle to enable/ disable the A-XMP. Switch the outer circle to select the memory profile if any. This switch will only be available if the installed processor and memory modules support XMP function.

• **Setup Mode switch** - press this tab or the **F7** key to switch between Advanced mode and EZ mode.

• **Screenshot** - click on this tab or the **F12** key to take a screenshot and save it to USB flash drive (FAT/ FAT32 format only).

• **Search** - click on this tab or the **Ctrl+F** keys and the search page will show. It allows you to search by BIOS item name, enter the item name to find the item listing. Move the mouse over a blank space and right click the mouse to exit search page.

Important

In search page, only the F6, F10 and F12 function keys are available.

• **Language** - allows you to select the language of BIOS setup.

• **System information** - shows the CPU/ DDR speed, CPU/ MB temperature, MB/ CPU type, memory size, CPU/ DDR voltage, BIOS version and build date.

• **Boot device priority bar** - you can move the device icons to change the boot priority. The boot priority from high to low is left to right.

• **Information display** - click on the **CPU**, **Memory**, **Storage**, **Fan Info** and **Help** buttons on left side to display related information.

• **Function buttons** - enable or disable the **LAN Option ROM, HD audio controller, AHCI/RAID, CPU Fan Fail Warning Control, Windows 10 WHQL support** and **BIOS Log Review** by clicking on their respective button.

▪ **Hardcore Mode** - always keep the CPU in full speed mode to maximize system performance. This feature will increase power consumption.

• **M-Flash** - click on this button to display the **M-Flash** menu that provides the way to update BIOS with a USB flash drive.

• **Hardware Monitor** - click on this button to display the **Hardware Monitor** menu that allows you to manually control the fan speed by percentage.

• **Favorites** - press the **Favorites** tab or the **F3** key to enter **Favorites** menu. It allows you to create personal BIOS menu where you can save and access favorite/ frequently-used BIOS setting items.

▪ **Default HomePage** - allows you to select a BIOS menu (e.g. SETTINGS, OC...,etc) as the BIOS home page.

▪ **Favorite1~5** - allows you to add the frequently-used/ favorite BIOS setting items in one page.

▪ **To add a BIOS item to a favorite page (Favorite 1~5)**

1. Move the mouse over a BIOS item not only on BIOS menu but also on search page.
2. Right-click or press **F2** key.
3. Choose a favorite page and click on **OK.**

▪ **To delete a BIOS item from favorite page**

1. Move the mouse over a BIOS item on favorite page (Favorite 1~5)
2. Right-click or press **F2** key.
3. Choose **Delete** and click on **OK**.

Advanced Mode

Press **Setup Mode switch** or **F7** function key can switch between EZ Mode and Advanced Mode in BIOS setup.

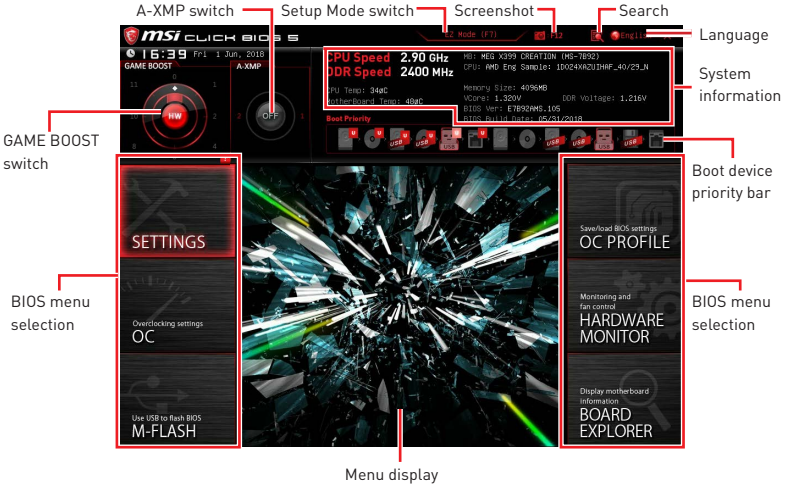

- **GAME BOOST switch/ A-XMP switch/ Setup Mode switch/ Screenshot/ Favorites/ Language/ System information/ Boot device priority bar** - please refer to the descriptions of EZ Mode Overview section.
- **BIOS menu selection** - the following options are available:
  - **SETTINGS** - allows you to specify the parameters for chipset and boot devices.
  - **OC** - allows you to adjust the frequency and voltage. Increasing the frequency may get better performance.
  - **M-FLASH** - provides the way to update BIOS with a USB flash drive.
  - **OC PROFILE** - allows you to manage overclocking profiles.
  - **HARDWARE MONITOR** - allows you to set the speeds of fans and monitor voltages of system.
  - **BOARD EXPLORER** - provides the information of installed devices on this motherboard.
- **Menu display** - provides BIOS setting items and information to be configured.

SETTINGS



System Status

▶ System Date

Sets the system date. Use tab key to switch between date elements.

The format is <day> <month> <date> <year>.

<day>	Day of the week, from Sun to Sat, determined by BIOS. Read-only.
<month>	The month from Jan. through Dec.
<date>	The date from 1 to 31 can be keyed by numeric function keys.
<year>	The year can be adjusted by users.

▶ System Time

Sets the system time. Use tab key to switch between time elements.

The time format is <hour> <minute> <second>.

▶ SATA PortX

Shows the information of connected SATA devices.

Important

If the connected SATA device is not displayed, turn off computer and re-check SATA cable and power cable connections of the device and motherboard.

▶ System Information

Shows detailed system information, including CPU type, BIOS version, and Memory (read only).

▶ DMI Information

Shows system information, desktop Board Information and chassis Information. (Read only).

Advanced

▶ PCI Subsystem Settings

Sets PCI, PCI express interface protocol and latency timer. Press **Enter** to enter the sub-menu.

▶ **Above 4G memory/ Crypto Currency mining [Disabled]**

Enables or disables 64-bit capable devices to be decoded in above 4G address space. It is only available if the system supports 64-bit PCI decoding.

[Enabled] Allows you to utilize more than 4x GPUs.

[Disabled] Disables this function.

▶ **PCIe SlotX Lanes Configuration**

PCIe lanes configuration for MSI M.2 XPANDER series cards/ Other M.2 PCIe storage card.

▶ **ACPI Settings**

Sets ACPI parameters of onboard power LED behaviors. Press **Enter** to enter the sub-menu.

▶ **Power LED [Blinking]**

Sets shining behaviors of the onboard Power LED.

[Dual Color] The power LED turns to another color to indicate the S3 state.

[Blinking] The power LED blinks to indicate the S3 state.

▶ **Integrated Peripherals**

Sets integrated peripherals' parameters, such as LAN, HDD, USB and audio. Press **Enter** to enter the sub-menu.

▶ **Onboard LAN Controller/ 2 [Enabled]**

Enables or disables the onboard LAN controller/ 2.

▶ **LAN Option ROM/ 2 [Disabled]**

Enables or disables the legacy network Boot Option ROM for detailed settings. This item will appear when **Onboard LAN Controller/ 2** is enabled.

[Enabled] Enables the onboard LAN Boot ROM.

[Disabled] Disables the onboard LAN Boot ROM.

▶ **Network Stack [Disabled]**

Sets UEFI network stack for optimizing IPv4 / IPv6 function. This item is available when Onboard LAN Controller/ 2 is Enabled.

[Enabled] Enables UEFI network stack.

[Disabled] Disables UEFI network stack.

▶ **Ipv4 PXE Support [Enabled]**

When **Enabled**, the system UEFI network stack will support Ipv4 protocol. This item will appear when **Network Stack** is Enabled.

[Enabled] Enables the Ipv4 PXE boot support.

[Disabled] Disables the Ipv4 PXE boot support.

▶ **Ipv6 PXE Support [Enabled]**

When **Enabled**, the system UEFI network stack will support Ipv6 protocol. This item will appear when **Network Stack** is enabled.

[Enabled] Enables the Ipv6 PXE boot support.

[Disabled] Disables the Ipv6 PXE boot support.

▶ **SATA Mode [AHCI Mode]**

Sets the operation mode of the onboard SATA controller.

[AHCI Mode] Specify the AHCI mode for SATA storage devices. AHCI (Advanced Host Controller Interface) offers some advanced features to enhance the speed and performance of SATA storage device, such as Native Command Queuing (NCQ) and hot-plugging.

[RAID Mode] Enables RAID function for SATA storage devices.

▶ **SATAx Hot Plug [Disabled]**

Allows user to enable or disable the SATA hot plug support.

[Enabled] Enables hot plug support for the SATA ports.

[Disabled] Disables hot plug support for the SATA ports.

▶ **HD Audio Controller [Enabled]**

Enables or disables the onboard High Definition Audio controller.

▶ **USB Configuration**

Sets the onboard USB controller and device function. Press **Enter** to enter the sub-menu.

▶ **XHCI Hand-off [Enabled]**

Enables or disables XHCI hand-off support.

[Enabled] Enables this item when installing the operating system which does not support USB 3.0.

[Disabled] Disables XHCI hand-off support.

▶ **Legacy USB Support [Enabled]**

Sets Legacy USB function support.

[Auto] The system will automatically detect if any USB device is connected and enable the legacy USB support.

[Enabled] Enable the USB support under legacy mode.

[Disabled] The USB devices will be unavailable under legacy mode.

▶ **Power Management Setup**

Sets system Power Management of ErP Ready and AC Power Loss behaviors. Press **Enter** to enter the sub-menu.

▶ **ErP Ready [Disabled]**

Enables or disables the system power consumption according to ErP regulation.

[Enabled] Optimize the system power consumption according to ErP regulation. It will not support S4 & S5 wake up by USB and PCIe devices.

[Disabled] Disables this function.

▶ **Restore after AC Power Loss [Power Off]**

Sets the system behaviors while encountering the AC power loss.

[Power Off] Leaves the system in power off state after restoring AC power.

[Power On] Boot up the system after restoring AC power.

[Last State] Restores the system to the previous state (power on/ power off) before AC power loss.

▶ **System Power Fault Protection [Disabled]**

Enables or disables the system to boot up when detecting abnormal voltage input.

[Enabled] Protect the system from unexpected power operating and remain the shut down status.

[Disabled] Disables this function.

▶ **Windows OS Configuration**

Sets Windows detailed configuration and behaviors. Press **Enter** to enter the sub-menu.

▶ **Windows 10 WHQL Support [Disabled]**

Enables the supports for Windows 10 or disables for other operating systems. Before enabling this item, make sure all installed devices & utilities (hardware & software) should meet the Windows 10 requirements.

[Enabled] The system will switch to UEFI mode to meet the Windows requirement.

[Disabled] Disables this function.

▶ **Secure Boot**

Sets the Windows secure boot to prevent the unauthorized accessing. Press **Enter** to enter the sub-menu. This sub-menu will appear when **Windows 10 WHQL Support** is enabled.

▶ **Wake Up Event Setup**

Sets system wake up behaviors for different sleep modes. Press **Enter** to enter the sub-menu.

▶ **Wake Up Event By [BIOS]**

Selects the wake up event by BIOS or operating system.

[BIOS] Activates the following items, set wake up events of these items.

[OS] The wake up events will be defined by OS.

▶ **Resume By RTC Alarm [Disabled]**

Disables or enables the system wake up by RTC Alarm.

[Enabled] Enables the system to boot up on a scheduled time/ date.

[Disabled] Disables this function.

▶ **Date (of month) Alarm/ Time (hh:mm:ss) Alarm**

Sets RTC alarm date/ Time. If Resume By RTC Alarm is set to [Enabled], the system will automatically resume (boot up) on a specified date/hour/minute/second in these fields (using the **+** and **-** keys to select the date & time settings).

▶ **Resume By PCI-E Device [Disabled]**

Enables or disables the wake up function of installed PCI-E expansion cards, integrated LAN controllers or USB devices which are supported by third party integrated chips.

[Enabled] Enables the system to be awakened from the power saving modes when activity or input signal of PCIe device is detected.

[Disabled] Disables this function.

▶ **Resume by USB Device [Disabled]**

Disables or enables system wake up from S3/S4 by USB device.

[Enabled] Enables the system to be awakened from sleep state when activity of USB device is detected.

[Disabled] Disables this function.

▶ **Resume From S3/S4/S5 by PS/2 Mouse [Disabled]**

Enables or disables the system wake up by PS/2 mouse.

[Enabled] Enables the system to be awakened from S3/ S4/ S5 state when activity of PS/2 mouse is detected.

[Disabled] Disables this function.

▶ **Resume From S3/S4/S5 by PS/2 Keyboard [Disabled]**

Enables or disables the system wake up by PS/2 keyboard.

[Any Key] Enables the system to be awakened from S3/ S4/ S5 state when activity of any key on PS/2 keyboard is detected.

[Hot Key] Enables the system to be awakened from S3/ S4/ S5 state when activity of hot key on PS/2 keyboard is detected.

[Disabled] Disables this function.

▶ **Hot Key [Ctrl+Space]**

Selects a combination of keys as a hot key to wake the system. This item appears when you set the **Resume From S3/S4/S5 by PS/2 Keyboard** to **Hot Key**.

▶ **Secure Erase+**

Enables or disables Secure Erase+ function. **Secure Erase+** is the best way to effectively wipe all data from a SSD. Please note that data of SSD will be erased after enabling **Secure Erase+**.

▶ **Intel (R) I211 Gigabit Network Connection**

Shows driver information and configuration of the Ethernet controller parameter.

▶ **Intel (R) I211 Gigabit Network Connection**

Shows driver information and configuration of the Ethernet controller parameter.

Boot

Sets the sequence of system boot devices.

▶ **Full Screen Logo Display [Enabled]**

Enables or disables to show the full screen logo while system POST.

[Enabled] Shows the logo in full screen.

[Disabled] Shows the POST messages.

▶ **Bootup NumLock State [On]**

Select the keyboard NumLock state upon bootup.

▶ **Info Block effect [Unlock]**

Sets the state of **Help** information block.

[Unlock] Sliding effect.

[Lock] Fix the **Help** information block on the screen.

▶ **POST Beep [Disabled]**

Enables or disables POST beep.

▶ **AUTO CLR_CMOS [Disabled]**

Enables or disables the CMOS data to be resumed automatically when the system cannot boot to OS and reboot repeatedly.

▶ **Boot Mode Select [LEGACY+UEFI]**

Sets the system boot mode from legacy or UEFI architecture depending on OS installation requirement. This item will become un-selectable and will be configured automatically by BIOS when **Windows 10 WHQL Support** is enabled.

[UEFI]	Enables UEFI BIOS boot mode support only.
[LEGACY+UEFI]	Enables both Legacy BIOS boot mode and UEFI BIOS boot mode.

▶ **FIXED BOOT ORDER Priorities**

Sets device priority for system boot.

▶ **Boot Option Priorities**

These items are used to prioritize the installed boot devices.

Security

▶ **Administrator Password**

Sets administrator password for system security. User has full rights to change the BIOS items with administrator password. After setting the administrator password, the state of this item will show **Installed**.

▶ **User Password**

Sets User Password for system security. User has limited rights to change the BIOS items with user password. This item will be available when administrator password is set. After setting the user password, the state of this item will show **Installed**.

▶ **Password Check [Setup]**

Selects a condition that will request the password.

[Setup]	A password will be requested for entering the BIOS Setup.
[Boot]	A password will be requested for booting the system.

▶ **Password Clear [Enabled]**

Enables or disables the clear CMOS behavior to clear a set password.

[Enabled]	The password will be erased after clear CMOS.
[Disabled]	The password will always be kept.

Important

*When selecting the Administrator / User Password items, a password box will appear on the screen. Type the password then press **Enter**. The password typed now will replace any previous set password from CMOS memory. You will be prompted to confirm the password. You may also press **Esc** key to abort the selection.*

*To clear a set password, press **Enter** when you are prompted to enter a new password. A message will confirm the password is being disabled. Once the password is disabled, you can enter the setup and OS without authorization.*

▶ **Trusted Computing**

Sets TPM (Trusted Platform Module) function.

▶ **Security Device Support [Disabled]**

Enables or disables the TPM function to build the endorsement key for accessing the system.

▶ **AMD fTPM switch [AMD CPU fTPM]**

Selects TPM device.

[AMD CPU fTPM]	Select it for AMD Firmware TPM.
[AMD CPU fTPM Disabled]	Select it for Discrete TPM.

▶ **Device Select [Auto]**

Sets the version of the TPM device. The version must be identical with the device. Sets to **Auto**, system will detect the TPM2.0 or TPM1.2 model automatically.

▶ **Chassis Intrusion Configuration**

Press **Enter** to enter the sub-menu.

▶ **Chassis Intrusion [Disabled]**

Enables or disables recording messages while the chassis is opened. This function is ready for the chassis equips a chassis intrusion switch.

[Enabled]	Once the chassis is opened, the system will record and issue a warning message.
[Reset]	Clear the warning message. After clearing the message, please return to **Enabled** or **Disabled**.
[Disabled]	Disables this funcion.

Save & Exit

▶ **Discard Changes and Exit**

Exit BIOS setup without saving any change.

▶ **Save Changes and Reboot**

Save all changes and reboot the system.

▶ **Save Changes**

Save current changes.

▶ **Discard Changes**

Discard all changes and restore to the previous values.

▶ **Restore Defaults**

Restore or load all default values.

▶ **Boot Override**

The installed boot-able devices will appear on this menu, you can select one of them to be the boot device.

OC

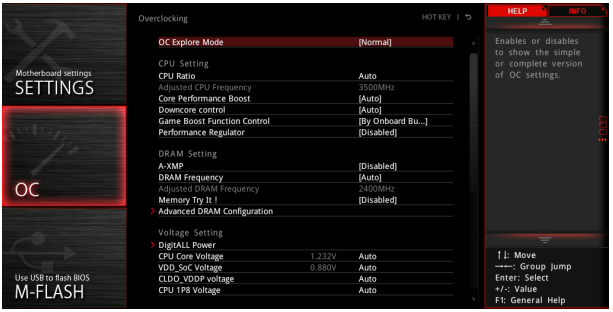

Important

- *Overclocking your PC manually is only recommended for advanced users.*
- *Overclocking is not guaranteed, and if done improperly, it could void your warranty or severely damage your hardware.*
- *If you are unfamiliar with overclocking, we advise you to use **GAME BOOST** function for easy overclocking.*

▶ OC Explore Mode [Normal]

Enables or disables to show the normal or expert version of OC settings.

[Normal] Provides the regular OC settings in BIOS setup.

[Expert] Provides the advanced OC settings for OC expert to configure in BIOS setup.

Note: We use * as the symbol for the OC settings of Expert mode.

▶ CPU Ratio [Auto]

Sets the CPU ratio that is used to determine CPU clock speed. This item can only be changed if the processor supports this function.

▶ Core Performance Boost [Auto]

Enables or disables the Core Performance Boost (CPB). This item appears when the installed CPU supports this function.

▶ Downcore Control [Auto] (optional)

Sets the number of processor cores to be used. This item appears when the installed CPU supports this function.

▶ Game Boost Function Control [By Onboard Button]

Enables the GAME BOOST function by virtual button in BIOS or physical button on motherboard. Enabling GAME BOOST function can automatically overclock the system with MSI optimized overclocking profile.

▶ Performance Regulator [Disabled]

Enables or disables the performance regulator.

▶ **CPU Base Clock (MHz) [Default]**

Sets the CPU Base clock. You may overclock the CPU by adjusting this value. Please note that overclocking behavior and stability is not guaranteed. This item appears when a CPU that support this function is installed.

▶ **A-XMP [Disabled]**

Please enable A-XMP or select a profile of memory module for overclocking the memory. This item will be available when the installed memory modules, processor and motherboard support this function.

▶ **DRAM Frequency [Auto]**

Sets the DRAM frequency. Please note the overclocking behavior is not guaranteed.

▶ **Memory Try It ! [Disabled]**

It can improve memory compatibility or performance by choosing optimized memory preset.

▶ **Advanced DRAM Configuration (optional)**

Press Enter to enter the sub-menu. User can set the memory timing for each/ all memory channel. The system may become unstable or unbootable after changing memory timing. If it occurs, please clear the CMOS data and restore the default settings. (Refer to the Clear CMOS jumper/ button (optional) section to clear the CMOS data, and enter the BIOS to load the default settings.)

▶ **DigitALL Power**

Press **Enter** to enter the sub-menu. Controls the digital powers related to CPU PWM.

▶ **CPU Loadline Calibration Control [Auto]**

The CPU voltage will decrease proportionally according to CPU loading. Higher load-line calibration could get higher voltage and good overclocking performance, but increase the temperature of the CPU and VRM. If set to **Auto**, BIOS will configure this setting automatically.

▶ **CPU VRM Over Temperature Protection [Auto]**

Sets the temperature limit on CPU VRM for over-temperature protection. The CPU frequency may be throttled when CPU temperature over the specified temperature. If set to **Auto**, BIOS will configure this settings.

▶ **VR 12VIN OCP Expander [Auto]**

Expands the limitation of VR Over Current Protection with 12V input voltage. The higher expanding value indicates less protection. Therefore, please adjust the current carefully if needed, or it may damage the CPU/ VR MOS. If set to "Auto", BIOS will configure this setting automatically.

▶ **DRAM CH_A/B / CH_C/D Phase Control [Auto]**

Controls memory PWM phase according to the DRAM loading. If set to **Auto**, BIOS will optimize the DRAM PWM phase automatically.

[Auto]	This setting will be configured automatically by BIOS.
[Optimized]	Sets the optimum PWM phase profile.
[Disabled]	Disables the PWM phase switching feature.

▶ **DRAM CH_A/B / CH_C/D Over Current Protection [Auto]**

Sets the current limit for DRAM over-current protection. If set to **Auto**, BIOS will configure this setting automatically.

[Auto] This setting will be configured automatically by BIOS.

[Enhanced] Extends the current range for over-current protection.

▶ **DRAM CH_A/B / CH_C/D Switching Frequency [Auto]**

Sets the PWM working speed to stabilize DRAM voltage and minimize ripple range. Increasing the PWM working speed will cause higher temperature of MOSFET. So please make sure a cooling solution is well-prepared for MOSFET before you increase the value. If set to **"Auto"**, BIOS will configure this setting automatically.

▶ **DRAM CH_A/B / CH_C/D VRM Over Temperature Protection [Auto]**

Sets the temperature limit on DRAM VRM for over-temperature protection. The DRAM frequency may be throttled when VRM temperature over the specified value. If set to **Auto**, BIOS will configure this settings.

▶ **CPU Voltages control [Auto]**

These options allows you to set the voltages related to CPU. If set to **Auto**, BIOS will set these voltages automatically or you can set it manually.

▶ **DRAM Voltages control [Auto]**

These options allows you to set the voltages related to memory. If set to **Auto**, BIOS will set these voltages automatically or you can set it manually.

▶ **PROM Voltages control [Auto]**

These options allows you to set the voltages related to PROM. If set to **Auto**, BIOS will set these voltages automatically or you can set it manually.

▶ **CPU Memory Changed Detect [Enabled]***

Enables or disables the system to issue a warning message during boot when the CPU or memory has been replaced.

[Enabled] The system will issue a warning message during boot and then you have to load the default settings for new devices.

[Disabled] Disables this function and keeps the current BIOS settings.

▶ **CPU Specifications**

Press **Enter** to enter the sub-menu. This sub-menu displays the information of installed CPU. You can also access this information menu at any time by pressing [F4]. Read only.

▶ **CPU Technology Support**

Press **Enter** to enter the sub-menu. The sub-menu shows the key features of installed CPU. Read only.

▶ **MEMORY-Z**

Press **Enter** to enter the sub-menu. This sub-menu displays all the settings and timings of installed memory. You can also access this information menu at any time by pressing [F5].

▶ **DIMMx Memory SPD**

Press **Enter** to enter the sub-menu. The sub-menu displays the information of installed memory. Read only.

▶ **CPU Features**

Press **Enter** to enter the sub-menu.

▶ **SMT Mode [Auto]**

Enables/ disables the AMD Simultaneous Multi-Threading. This item appears when the installed CPU supports this technology.

▶ **Global C-state Control [Auto]**

Enables/ disables IO based C-state generation and DF C-states.

▶ **Opcache Control [Auto]**

Enables/ disables Opcache.

▶ **IOMMU [Auto]**

Enables/disables the IOMMU (I/O Memory Management Unit) for I/O Virtualization.

▶ **Spread Spectrum [Auto]**

This function reduces the EMI (Electromagnetic Interference) generated by modulating clock generator pulses.

[Enabled]	Enables the spread spectrum function to reduce the EMI (Electromagnetic Interference) problem.
[Disabled]	Enhances the overclocking ability of CPU Base clock.

Important

- *If you do not have any EMI problem, leave the setting at [Disabled] for optimal system stability and performance. But if you are plagued by EMI, select the value of Spread Spectrum for EMI reduction.*
- *The greater the Spread Spectrum value is, the greater the EMI is reduced, and the system will become less stable. For the most suitable Spread Spectrum value, please consult your local EMI regulation.*
- *Remember to disable Spread Spectrum if you are overclocking because even a slight jitter can introduce a temporary boost in clock speed which may just cause your overclocked processor to lock up.*

▶ **Relaxed EDC throttling [Auto]**

[Auto]	AMD's recommendation
[Enabled]	Reduce the amount of time the processor will throttle.
[Disabled]	Part-specific EDC throttling protection enabled.

▶ **AMD Cool' n' Quiet [Enabled]**

The Cool' n' Quiet technology can effectively and dynamically lower CPU speed and power consumption.

▶ **BIOS PSP Support [Enabled] (optional)**

Enables/ disables the BIOS PSP support. It manages PSP sub-items including all C2P/P2C mailbox, Secure S3, fTPM support.

▶ **SVM Mode [Enabled]**

Enables/ disables the AMD SVM (Secure Virtual Machine) Mode.

▶ **Precision Boost Overdrive [Auto]**

Enables/ disables the precision boost overdrive for CPU. If set to **Auto**, BIOS will configure these settings.

▶ **Precision Boost Overdrive Scalar [Auto]**

Sets the scalar of precision boost overdrive. If set to **Auto**, BIOS will configure these settings.

M-FLASH

M-FLASH provides the way to update BIOS with a USB flash drive. Please down-load the latest BIOS file that matches your motherboard model from MSI website, save the BIOS file into your USB flash drive. And then follow the steps below to update BIOS.

1. Insert the USB flash drive that contains the update file into the computer.
2. Click on **M-FLASH** tab, a demand message will be prompted. Click on **Yes** to reboot and enter the flash mode.

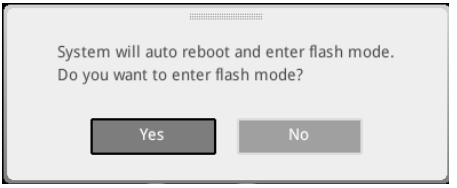

3. The system will enter the flash mode and a file selection menu will appear after rebooting.

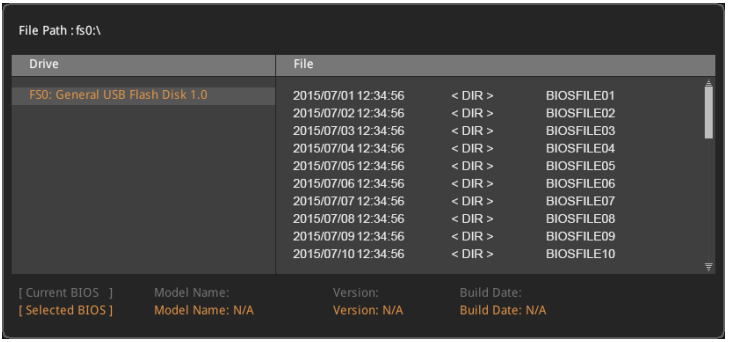

4. Select the BIOS file.
5. A message will prompt you to toggle the Multi BIOS switch to the target BIOS ROM, and then click **OK** to perform the BIOS update process.



6. After the flashing process is 100% completed, the system will reboot automatically.

OC PROFILE



▶ Overclocking Profile 1/ 2/ 3/ 4/ 5/ 6

Overclocking Profile 1/ 2/ 3/ 4/ 5/ 6 management. Press <Enter> to enter the sub-menu.

▶ Set Name for Overclocking Profile 1/ 2/ 3/ 4/ 5/ 6

Name the current overclocking profile.

▶ Save Overclocking Profile 1/ 2/ 3/ 4/ 5/ 6

Save the current overclocking profile.

▶ Load Overclocking Profile 1/ 2/ 3/ 4/ 5/ 6

Load the current overclocking profile.

▶ Clear Overclocking Profile 1/ 2/ 3/ 4/ 5/ 6

Clear the current overclocking profile.

▶ OC Profile Load from ROM

Load OC profile from BIOS ROM.

▶ OC Profile Save to USB

Save OC profile to the USB flash drive. The USB flash drive should be FAT/ FAT32 format only.

▶ OC Profile Load from USB

Load OC profile from the USB flash drive. The USB flash drive should be FAT/ FAT32 format only.

Software Description

Please download and update the latest utilities and drivers at www.msi.com

Installing Windows® 10

1. Power on the computer.
2. Insert the Windows® 10 disc into your optical drive.
3. Press the **Restart** button on the computer case.
4. Press **F11** key during the computer POST (Power-On Self Test) to get into Boot Menu.
5. Select your optical drive from the Boot Menu.
6. Press any key when screen shows **Press any key to boot from CD or DVD...** message.
7. Follow the instructions on the screen to install Windows® 10.

Installing Drivers

1. Start up your computer in Windows® 10.
2. Insert MSI® Driver Disc into your optical drive.
3. The installer will automatically appear and it will find and list all necessary drivers.
4. Click **Install** button.
5. The software installation will then be in progress, after it has finished it will prompt you to restart.
6. Click **OK** button to finish.
7. Restart your computer.

Installing Utilities

Before you install utilities, you must complete drivers installation.

1. Insert MSI® Driver Disc into your optical drive.
2. The installer will automatically appear.
3. Click **Utilities** tab.
4. Select the utilities you want to install.
5. Click **Install** button.
6. The utilities installation will then be in progress, after it has finished it will prompt you to restart.
7. Click **OK** button to finish.
8. Restart your computer.

APP MANAGER

APP MANAGER is a handy management application for integration of MSI applications and software interface. Providing easy shortcut entrance and real-time update information of all the MSI software and applications.



- **APP list** - shows all the applications and software be supported by this motherboard. An icon represents a entrance to the application.
  - **Colorful icon** - a colorful icon means that the application had have been installed successfully and it is available. Double click on desired icon to access the application. A refresh icon shows to inform you that the application has a update version.
  - **Gray icon** - the icon with gray painting means that the application is not available and you have to install it if necessary. Double click on the gray icon and the update information will show. Click on the **INSTALL** button to install the application.
- **Motherboard Information** - shows the model name of motherboard.
- **Total Install/ Update** - click on this tab to update/ install all the applications.

Important

Please note that, once you uninstall the APP MANAGER, all the MSI applications and software will be uninstalled simultaneously.

LIVE UPDATE 6

LIVE UPDATE 6 is an application for the MSI® system to scan and download the latest drivers, BIOS and utilities. With LIVE UPDATE 6, you don't need to search the drivers on websites, and don't need to know the models of motherboard and graphics cards. LIVE UPDATE 6 will download the appropriate drivers automatically.

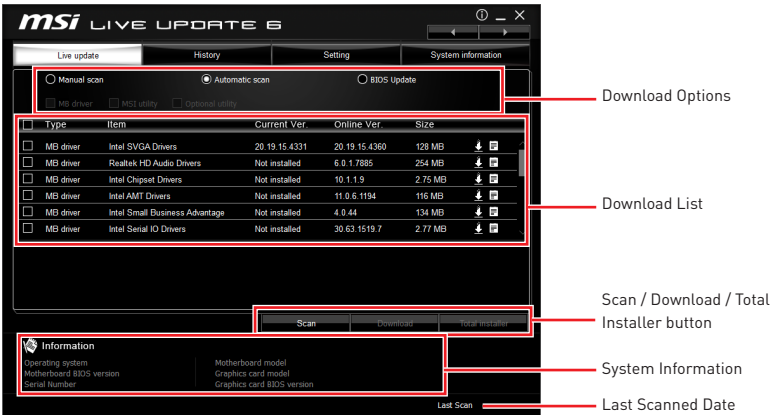

There are **Live Update, History, Setting** and **System Information** tabs at the top. You can click the tab to switch the control panel.

- **Live Update** - When you launch LIVE UPDATE 6, you will see the Live update tab at first. This tab allows you to select files to download. You can also read the relevant information by clicking the information icon on the right of the item listed.
- **History** - shows the downloading history.
- **Setting** - allows you to specify the frequency that LIVE UPDATE 6 remind you to update.
- **System Information** - displays the information of the system.
- **FAQ** - shows Frequently Asked Questions.
- **Online Help** - shows Online Help information.

Updating The System

This section describes how to update your system with LIVE UPDATE 6. Please follow the steps below:

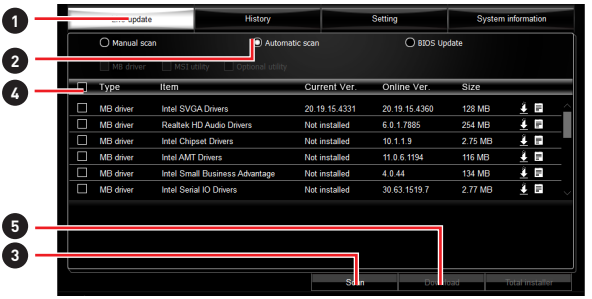

1. Select the **Live Update** tab.
2. Choose **Automatic scan**, system will automatically scan all the items and search for the latest update files. Or you can choose **Manual scan** and select the items you wish to scan.
3. Click the **Scan** button at the bottom. It may take several moments to complete the process.
4. When the download list appears, please select the items you intend to update.
5. Click **Download** button at the bottom.
6. When **Save Path** prompt, you can specify a download directory.

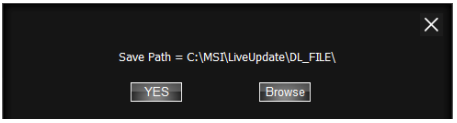

7. When downloading you will see the screen below. It may take several moments to complete the process.

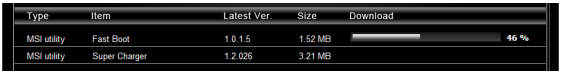

8. To install the applications, simply unpack the packages and install.

Total Installer

Total Installer is a convenient feature to simplify frequent installing procedure. To use Total Installer:

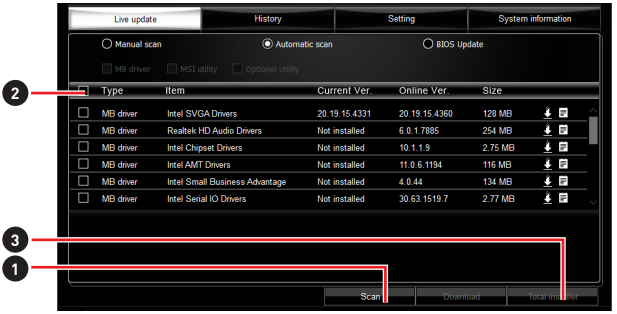

1. **Scan** updates in **Live Update** tab.
2. Check the **Select All** check-box you intend to update.
3. Click the **Total Installer** button. LIVE UPDATE 6 will automatically install them.
4. When prompted, click **OK** to complete the Total Installer procedure
5. Reboot your system.

COMMAND CENTER

COMMAND CENTER is an user-friendly software and exclusively developed by MSI, helping users to adjust system settings and monitor status under OS. With the help of COMMAND CENTER, making it possible to achieve easier and efficient monitoring process and adjustments than that under BIOS. In addition, the COMMAND CENTER can be a server for mobile remote control application.

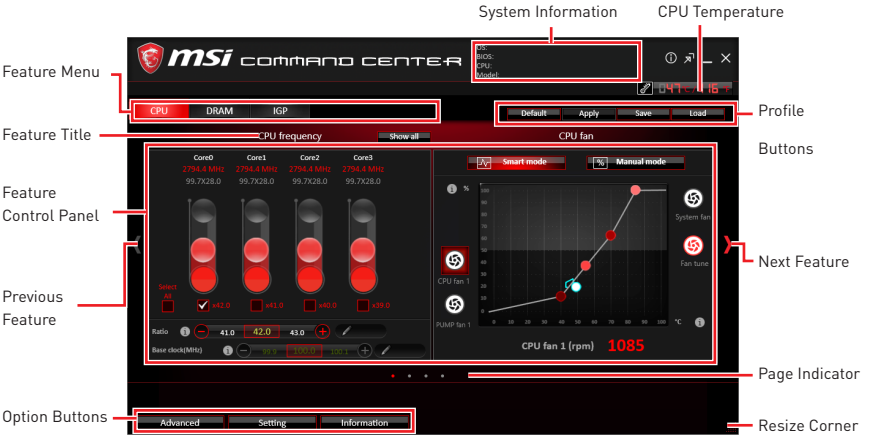

Profile Buttons



- **Default** - load the default values for the current feature.
- **Apply** - apply your changes.
- **Save** - store values in the file with individual file extension.
- **Load** - load the values from the file.

Important

*Every time you shut down the system, the configured setting will be restored to the factory default. If you want to use the saved settings, you have to load it every time by clicking the **Load** and **Apply** buttons.*

CPU Frequency

CPU Frequency control panel allows you to change CPU Ratio and Base clock. You can see the current frequency of each CPU core on the top of the panel.

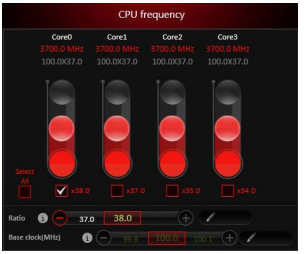

CPU Fan

CPU Fan control panel provides **Smart mode** and **Manual Mode**. You can switch the control mode by clicking the **Smart Mode** and **Manual Mode** buttons on the top of the CPU Fan control panel.

- **Manual Mode** - allows you to manually control the CPU fan speed by percentage.
- **Smart Mode** - a linear fan speed control feature. The control panel contains 4 dots allows you to drag and adjust the Smart Speed slopes. The fan speed will be changed along these lines with CPU temperature. The white dot will create strip chart in real time.
- **System Fan Button** - to open the system fan control panel in new window.
- **Fan Tune Button** - to automatically optimize the smart fan setting.



Manual Mode

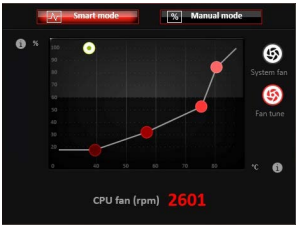

Smart Mode

CPU Voltage

CPU Voltage control panel allows you to control the CPU voltage.

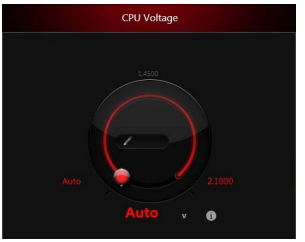

DRAM Frequency & DRAM Voltage

- **DRAM Frequency** - Shows the DRAM clock, ratio and frequency.
- **DRAM Voltage** - Allows you to adjust the DRAM voltage. The risky values are displayed in red.

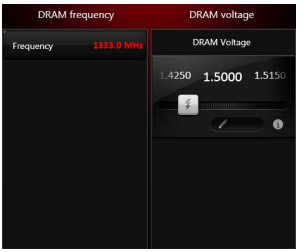

IGP Frequency & GT Voltage

- **IGP Frequency** - Allows you to adjust the IGP ratio, and shows the IGP clock, ratio and frequency.
- **GT Voltage** - Allows you to adjust the GT voltage. The risky values are displayed in red.

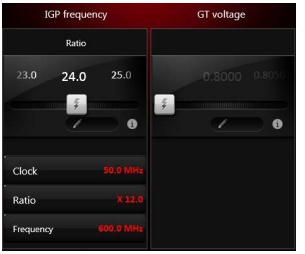

Option Buttons - Advanced

When click the **Advanced** button, The **Voltage**, **Fan** and **DRAM** icons will appear.



• **Voltage** - allows you to adjust advanced voltage values of CPU and chipset.

• **Fan** - allows you to control the system fans speed.

• **DRAM** - shows the current Advanced DRAM parameters, and allows you to change the settings by selecting values from the drop-down menu on the right hand side.

• **Sensor** - allows you to monitor your motherboard temperature and fan speed with the virtual thermal image. You can drag and drop the fan icons to new locations. When you press the **Cooling** button, all fans will run at full speed.

Option Buttons - Setting

When click the **Setting** button, The **Record**, **Warning** and **Mobile Control** icons will appear.

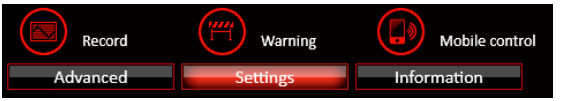

• **Record** - allows you to monitor the status of voltage, fan speed and temperature in real time.

- To filter record charts, select the check box next to the items.
- When click the **Play** button, the chart pane will start to show the recording chart. If you want to check the value of a specific spot on chart, please move the orange vertical line to the spot.
- History Record stores the data and names with date and time.
- To make a history record: Select items and click the **Record** button. When finished, click the **Record** button again. The data will be stored in the drop-down menu.
- To load a record, click the drop-down menu and select one from the list.
- To delete a record, select the record that you want to delete, and click the **Trash Can** icon.

• **Warning** - contains fields of voltage, fan speed and temperature for you to set the threshold values. When system detects the status over your settings, a warning message will pop-up.

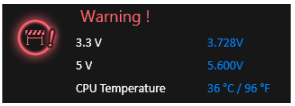

• **Mobile Control** - is only available for the motherboard with the built-in WiFi module. It allows you to enable/disable the COMMAND CENTER Remote Server. Please refer to the instruction on the Mobile Control control panel.

• **To start remote control: (optional)**

1. Download and install **MSI® COMMAND CENTER** APP to your mobile device.
2. Enable **COMMAND CENTER Remote Server** on the **Mobile Control** panel.
3. Enable **SoftAP Management**.
4. Enter **SSID** and **Password**, and then click the **Apply** button.
5. Activate Wi-Fi® on your mobile device and connect to SoftAP with the SSID.
6. Run **MSI® COMMAND CENTER** APP on your mobile device.
7. Find the IP address on the **SoftAP Management Setting** area, and enter the IP address on your **MSI® COMMAND CENTER** APP to link your system.
8. Press **Refresh** on the **MSI® COMMAND CENTER** APP to verify that monitoring and OC functions are working properly.

Option Buttons - Information

When click the **Information** button, The **Motherboard**, **CPU**, **Memory** and **HW monitor** icons will appear.



You can click the icons to open the related information.

Gadget Mode

COMMAND CENTER provides a gadget mode to monitor the system status. You can switch between gadget mode and full mode by clicking the arrow icon on the top left.

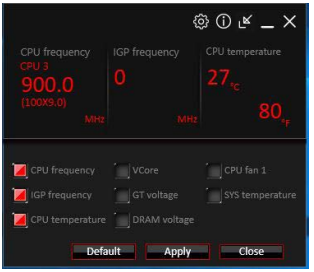

• **To arrange gadgets:**

1. Click the Spanner icon on the Gadget mode, a configuration panel will slide out.
2. Select the check box next to the items.
3. Click the **Close** button.

GAMING APP

GAMING APP is an application designed to quickly control your system for improving gaming performance.

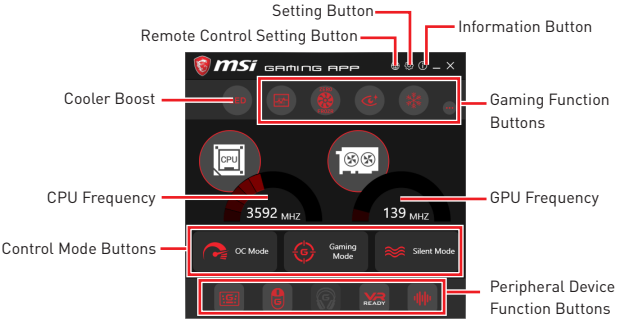

- **Setting Button** - allows you to choose running GAMING APP when Windows starts or let GAMING APP to overwrite the VGA fan control function.
- **Information Button** - shows the information of this application.
- **CPU Frequency** - shows the current CPU frequency.
- **GPU Frequency** - shows the current GPU frequency.
- **Control Mode Buttons**
  - **OC Mode** - apply turbo frequency to CPU and OC frequency to GPU.
  - **Gaming Mode** - automatically optimize the CPU ratio and the GPU clock.
  - **Silent Mode** - reverts the CPU ratio and GPU clock to the default values.
- **Gaming Function Buttons** - allows you to use **Eye Rest** function.
- **Peripheral Device Function Buttons** - allows you to set the **Gaming Hotkey, Mouse Master**, **VR Ready** and **Voice Boost** functions.
- **Remote Control Setting Button** - available for the motherboards with built-in or discrete WiFi module. It allows you to set up **Name** and **Password** to link the android device and the motherboard. Please follow the steps below to complete the remote control setting.

1. Download and install the **MSI® GAMING APP** APP to your android device.
2. Set up a set of **Name** and **Password** on the **Remote Control Setting** panel, and then click the **Apply** button.
3. Connect your android device and motherboard to the same local area network.
4. Run **MSI® GAMING APP** APP on your android device.
5. Press the **Remote Control Setting** icon on the **MSI® GAMING APP** APP to find the paired device **Name** you set in the **Remote Control Setting** panel.
6. Enter the **Password** you set in the **Remote Control Setting** panel.
7. Finally, you can use the **MSI® GAMING APP** APP to control your motherboard with the android device.

Eye Rest

Eye Rest allows you to optimize the display on your monitor.

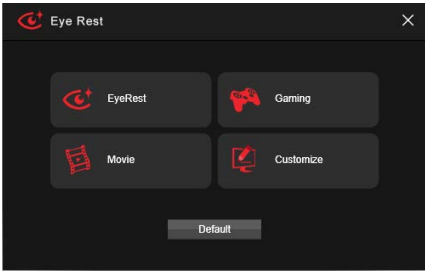

- **EyeRest** - reduces blue-light of your LED backlit screen, in order to protect your eyes.
- **Gaming** - automatically increase contrast ratio of your screen.
- **Movie** - automatically increase dynamic contrast ratio of your screen.
- **Customize** - allows you to adjust gamma, contrast and color balance for your screen.
- **Default** - loads the default settings.

Gaming Hotkey

Gaming Hotkey provides instant control of the system through user defined hotkeys.

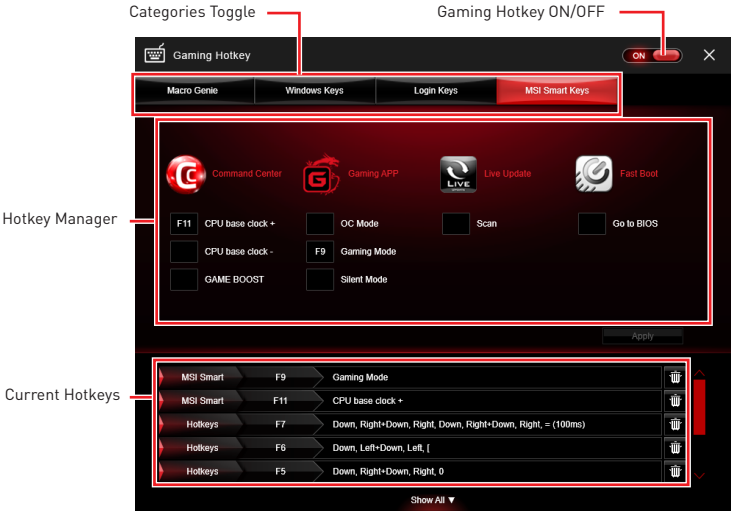

- **Gaming Hotkey ON/OFF** - allows you to turn ON/OFF the Gaming Hotkey function.
- **Categories Toggle** - allows you to toggle over the Hotkey categories.
  - **Macro Genie** - provides the keyboard and mouse macro record function and allows you to define the hotkeys for the macro recorder.
    1. Click on the **Record** button to start the keyboard and mouse macro recorder.
    2. Click on the **Stop** button to stop the recorder.
    3. Key-in a file name and set-up the parameter for the macro.
    4. Finally, click on the **Save** button to save the recorded macro.
  - **Windows Keys** - allows you to define hotkeys to replace Windows default keyboard shortcuts.
  - **Login Keys** - provides hotkey login function.
  - **MSI Smart Keys** - allows you to define hotkeys for MSI Smart Keys.
- **Hotkey Manager** - allows you to create, edit and delete hotkeys.
- **Current Hotkeys** - shows all existing hotkeys.

Important

- *The **Caps Lock**, **Num Lock**, **Scroll Lock**, **Window Home**, **Application** and **BackSpace** keys can not be used as Hotkeys.*
- *Some key combinations are reserved for use by Microsoft Windows and can not be assigned as a hotkey.*

Mouse Master

Mouse Master provides mouse macro function. You can also use it to change DPI of your mouse.

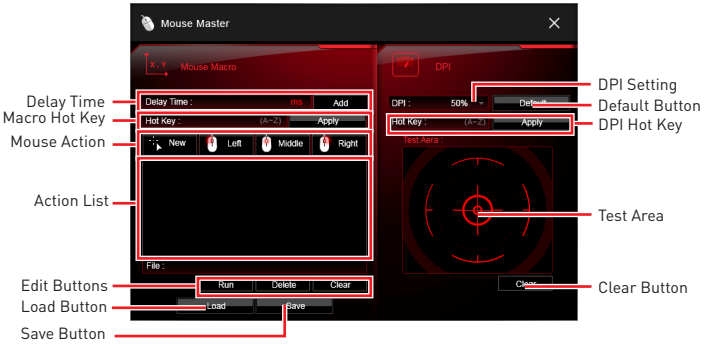

- **Delay Time** - allows you to apply a delay time in mouse macro.
- **Macro Hot Key** - allows you to assign a hotkey from A to Z to activate the macro.
- **Mouse Action** - assigns mouse actions to the macro.
  - **New** - captures the mouse coordinate and add to the macro.
  - **Left** - add a left-click to the macro.
  - **Middle** - add a middle-click to the macro.
  - **Left** - add a left-click to the macro.
- **Action List** - shows the actions of the current macro.
- **Edit Buttons** - there 3 buttons for editing the macro.
  - **Run** - activates the macro.
  - **Delete** - removes the selected action from the macro.
  - **Clear** - removes all actions from the macro.
- **Load Button** - allows you to load a macro.
- **Save Button** - allows you to save the macro to a file.
- **DPI Setting** - allows you select the mouse DPI from the drop-down menu.
- **Default Button** - reverts to the default DPI setting.
- **DPI Hot Key** - allows you to assign a hotkey from A to Z to activate the DPI setting. Please note that you muse hold the hotkey to keep the DPI setting. When you release the hotkey, the DPI setting will be reverted to default.
- **Test Area** - allows you to test the mouse movement.
- **Clear Button** - clears the test area.

VR Ready

It will optimize the performance of your system to ensure everything is VR Ready.



- **VR ON/ OFF** -enables or disables VR settings.
- **Applications** - appears when you turn on the VR support. It allows you to close some applications to optimize the system for better VR experience.

Voice Boost

Voice Boost function allows you to boost volume in voice communication tools.

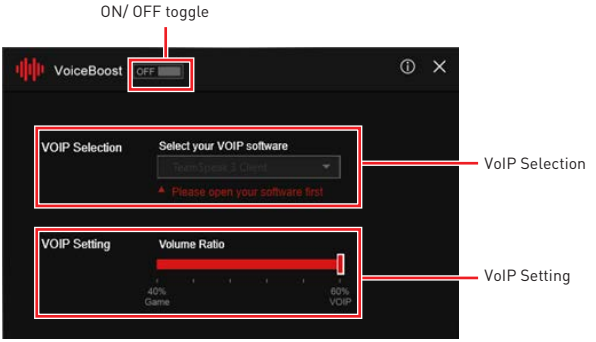

- **ON/ OFF toggle** -enables or disables Voice Boost function.
- **VOIP Selection** - selects your voice communication tool.
- **VOIP Setting** - adjust the volume ratio in voice communication tool.

Important

The Voice Boost function is only available with Nahimic 3 and voice communication tools (TeamSpeak, Raidcall, Skype, SkypeHost and Discord).

X-BOOST

The MSI **X-BOOST** allows you to select the system performance mode to meet your current system environment or support faster storage access speed for your external storage or memory cards.

Easy

In **Easy** page, you can select one system performance mode to meet the current system environment.

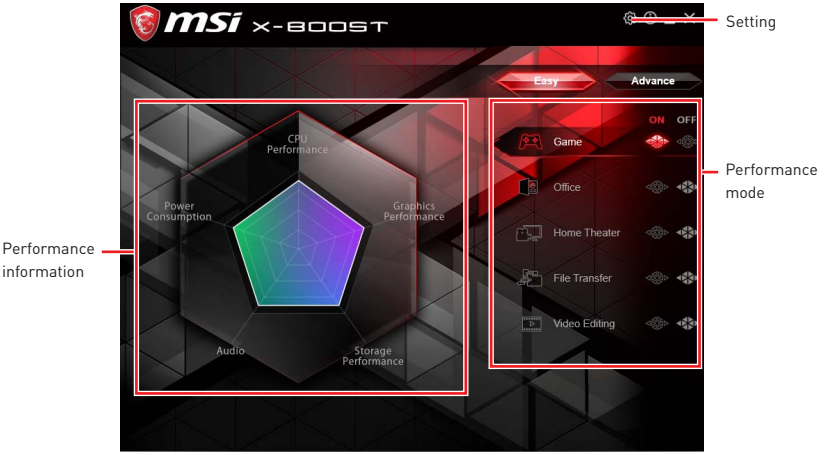

• **Performance mode** - moves over the mouse to any one of performance mode and click on the **ON** button to enable it.

Important

*The **Customize** mode is the default of system performance.*

• **Performance information** - displays the system performance diagram of enabled mode.

• **Setting** - enables or disables **Run X-BOOST when windows starts**.

Advance

In **Advance** page, you can enable the **USB SPEED UP,** the **STORAGE BOOST** and **VR BOOST**.

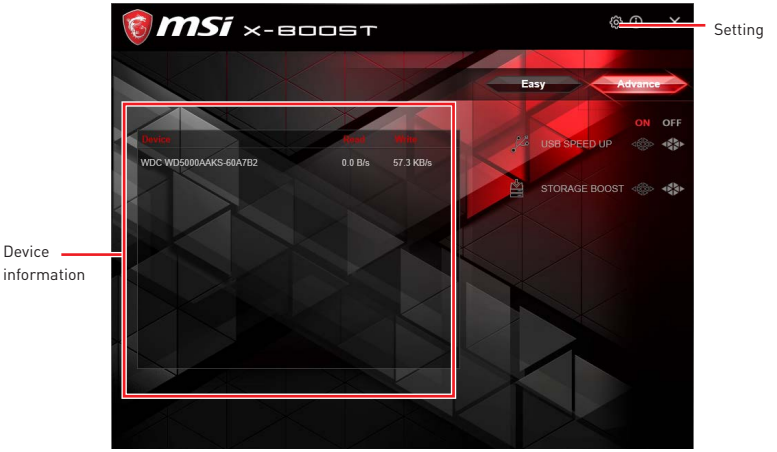

- **Device information** - displays the information and current transfer rates/ access speeds of USB/ storage devices.
- **Setting** - enables or disables **Run X-BOOST when windows starts**.
- **USB SPEED UP** - supports faster data transfer rates of the USB storage devices.
- **STORAGE BOOST** - supports faster access speed of storage device.

Important

- *Please note that you can only select one mode at a time from Easy or Advance page as MSI **X-BOOST** function.*
- *The improved transfer rate/ access speed will vary with the USB/ storage device.*

MYSTIC LIGHT

MYSTIC LIGHT is an application allows you to control LED lights of MSI products. For some earlier products, you can go to product download page to download the applicable LED control software.

Main Screen

The Main screen is used to configure what devices need to be synchronized and LED light effect options.

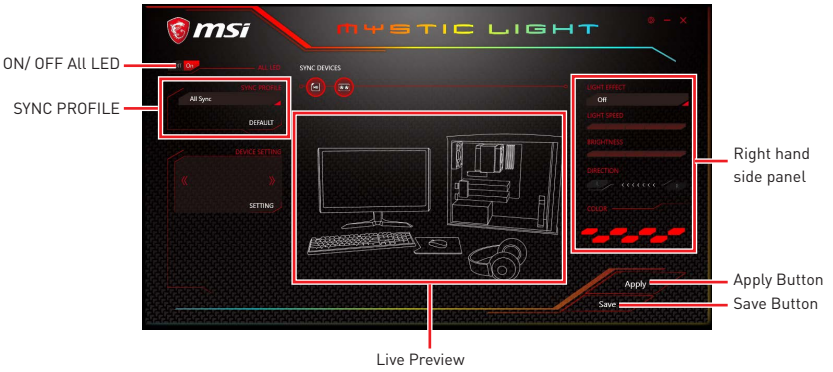

• **ON/OFF All LED** - By toggling Off/On here, you disable/enable all the LED on supported gaming gear, memory, graphics card and motherboard etc.



• **SYNC PROFILE** - In this section, you may apply different LED setting to your device.

▪ **All Sync** - Default: All the Sync device bubble would appear red.



To change the LED color & effect, use the panel on the right hand side to switch to different settings.



Please noted that for light effect, the option would be more or less depending on the devices you have, it will only list the light effects which are available for all included devices.

For the color section, you can always select a different color but it won’ t apply to the device that does not have such color.

You can also change settings for single device. To do that, you have to click the sync bubble twice and make it turn gray as below.

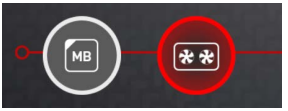

Then you go to **DEVICE SETTING** and click **SETTING**.

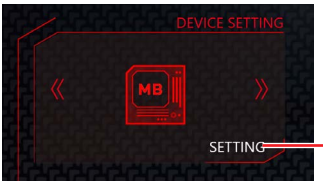

click **SETTING**

After that, the computer will open a different windows and you can modify LED there individually.



Note: *The motherboard picture and name may vary according to different models.*

You can save the current settings by clicking **Save**.

- **Individual** - Default: All the Sync device bubble would appear black.

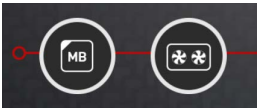

To change color for individual device, use the device setting panel below to lock on any device and click **SETTING** to customize the LED color/effect on it.

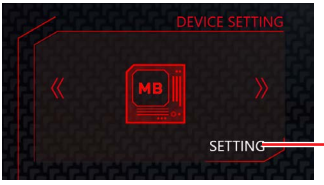

click **SETTING**

If you wish to customize multiple device at the same time, click the bubble until it turn red like below.



Use the **LIGHT EFFECT** & **COLOR** section on the main menu to make change.



Note:
Currently only GTX 1080 Ti Lightning -/X/Z and GTX 1080 Ti Gaming -/X Trio supports Light Speed/Brightness and no device supports Direction.

- **Profile01~03** - Save Sync profile settings.

• **Save Button** - saves sync device settings and lighting effect settings to the current Sync Profile.

Motherboard Screen

The motherboard screen is used to configure the LED light effect of the motherboard.



Note: *The motherboard picture and name may vary according to different models.*

- **Return Button** - returns to the main screen.
- **ON/OFF ALL LED** - allows you to turn ON/ OFF all LED lights of the motherboard.
- **SYNC ALL** - allows you to synchronize all LED light effect of the motherboard.
- **Motherboard Name** - shows the name of the motherboard.
- **Live Preview** - gives you the full experience of your configuration' s look, feel while you are editing it.
- **Light Effect Options** - allow you to customize lighting effect of the sync devices.
  - **LIGHT EFFECT** - allows you to change LED light effect.
  - **LIGHT SPEED** - allows you to change LED light speed.
  - **BRIGHTNESS** - allows you to change LED light brightness.

Note:
Currently only Z370 GODLIKE GAMING, H370 GAMING PRO CARBON and B360 GAMING PRO CARBON support Light Speed/Brightness.

  - **COLOR** - allows you to select the color for single light effects (Stack, Breathing, Flashing etc.).

- **Apply Button** - applies lighting effect settings.
- **PROFILE** - manages sets of motherboard LED light effect settings.
- **Save Button** - saves sync device settings and lighting effect settings to the current profile.
- **LED AREA** - switches to the other LED area on the motherboard.

MYSTIC LIGHT PARTY

This section allows you to control LED across different platform. The pre-requisite is that the platforms should all be connected within the same local network. Refer to device support list web page. https://www.msi.com/Landing/Mystic-Light-Party.

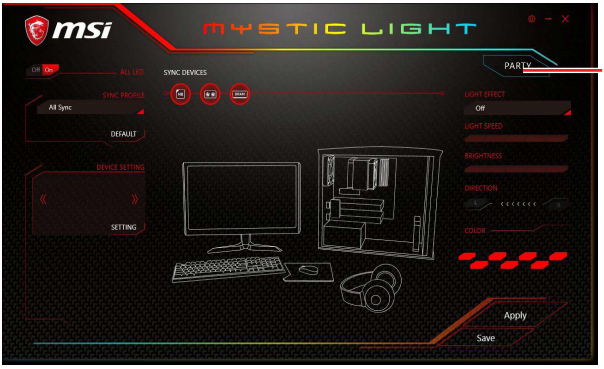

PARTY

Upon clicking **PARTY**, this window would pop out. On your master platform, click **+** to create a host group.

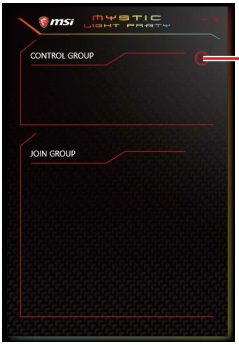

Click + to create a host group

Enter the group name (3~15 characters) and group array (13~30 columns, 5~30 rows) and click the **CREATE** button.



The group has been created. The other computers in the same local network are able to join the group with MYSTIC LIGHT software.

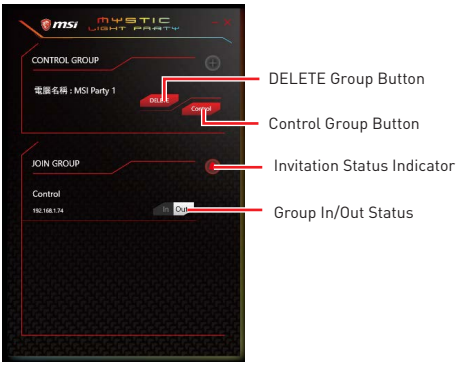

- **DELETE Group Button** - deletes the group.
- **Control Group Button** - enters the group control panel.
- **Invitation Status Indicator** - appears when receive an invitation to a group.
- **Group In/Out Status** - shows Group In/Out status.

Joining Group

On your slave platform, click **PARTY** to open MYSTIC LIGHT PARTY interface and click **In** to join the network.



Group Control Panel

If everything is set up properly, you can see your slave platform on master platform MYSTIC LIGHT PARTY window.

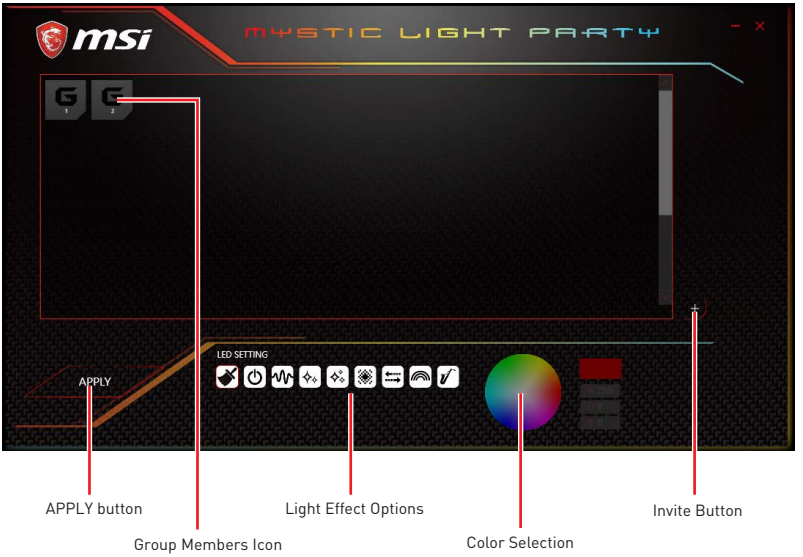

At the panel below, you may apply different LED settings and color to the selected platform.

Please be aware of certain limitation on the devices such as if you apply green color to a red-only device, the LED will stay off since it has on such color or if you apply rainbow to a no-rainbow mode device, the LED will stay on constantly.

• **Group Member Icons** - displays members status, and you can select a member to delete it in the DELETE pop-up window.

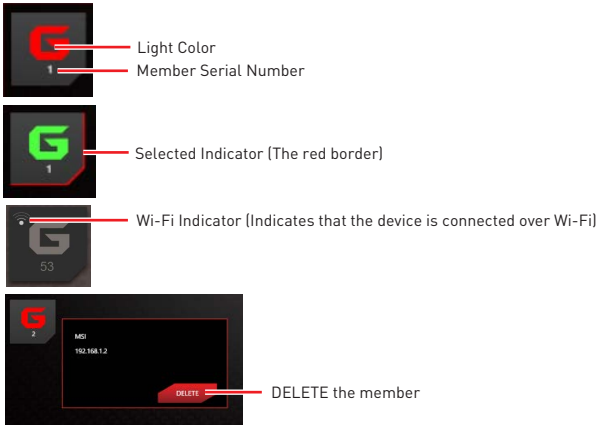

- **Invite Button** - enters the INVITE screen.
- **Light Effect Options** - allow you to customize lighting effect.

Off	Always on	Breathe
Flash	Double flash	Random
Marquee	Rainbow	Sound beat

- **Color Selection** - allows you to change color.

Inviting Member

Click the Invite button in the Group Control Panel to enter the INVITE screen. Select the device you want to invite and click the INVITE button.



SMART TOOL

SMART TOOL is a convenient tool that can help you to create your Windows installation USB flash drive, and it can also create a super RAID.

Main menu

After installing and activating SMART TOOL, it will display a main menu for you to choose **Smart Tool** or **SUPER RAID**. Note that the SUPER RAID is only available when your system equipped with at least 3 hard-disk drives (1 system disk and 2 data disks).

SMART TOOL

Before you can create your Windows installation USB flash drive, you' ll need to have your Windows Installation DVD or ISO file, and also have a minimum of a 8GB USB flash drive to create your installer. Be sure to backup files on the USB drive, this process will erase it.

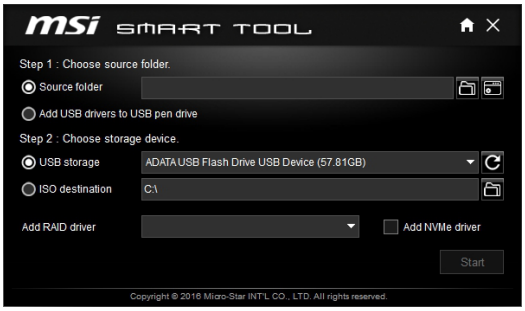

To create the Windows installation USB drive:

Step1. Choose source folder

• In the **Source folder** box, click **Browse** button and select the file from the dialog box. (This option will copy all Windows installation files.)

• **Add USB drivers to USB pan driver** option allows you to add USB driver on the USB pen drive. This option appears depend on the motherboard you purchased.

Step2. Choose Storage device

• Choose **USB storage** and select your USB flash drive in the drop-down list. In case the USB flash drive is not listed, click the **Refresh Drive** button.

• If you want to install Windows on the RAID drive, select the RAID driver version from the drop-down menu.

• If you want to add NVMe drive for your NVMe SSD drive, check the Add NVMe driver checkbox.

Important

*You can also create an installer ISO image file by selecting the **ISO destination** in Step2, and then burn it onto the DVD. However, this method does not support **RAID driver**.*

Step3. Click the **Start** buton.

SUPER RAID

This utility allows you to create a super RAID in Windows system.



To create a super RAID:

1. Use checkboxes to select the disks you want included in your RAID.
2. Choose **Speed Up** or **Backup** for RAID type.
   - Speed Up = RAID0
   - Backup = RAID1
3. Click **Start**.
4. When prompt **Finish!,** click **OK**.

Important

SUPER RAID can't includ the system disk.

RAMDISK

RAMDISK creates a virtual RAM drive using the available memory in your computer, the performance of the RAMDISK is faster than an SSD and hard drive. RAMDISK allows you to store any temporary information on it. Furthermore, using the RAMDISK will extend your SSD's life by sparing it from excessive reading and writing.

Creating a RAM Disk

When **RAMDISK** is started, it will create a default RAM disk. If you want to change settings, refer to following instructions.

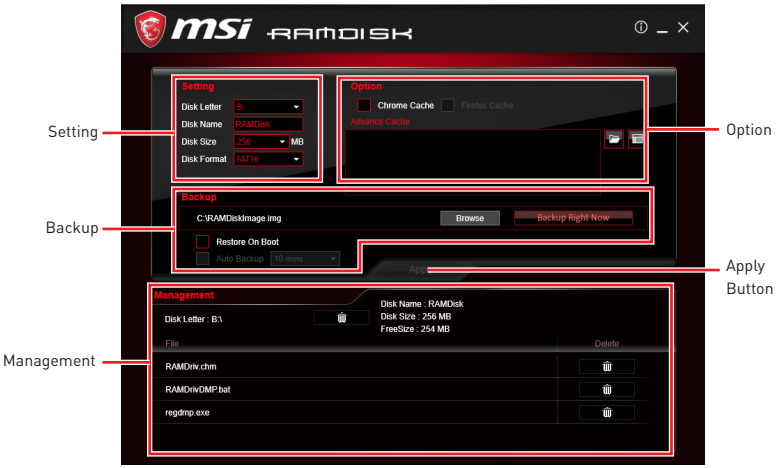

- **Setting** - specify **Letter**, **Name**, **Size** and **Format** of the RAM disk.
- **Option** - select browser temporary files to save/load on the RAM disk. You can also add software files to improve reading speed.
- **Backup** - specify backup and restore settings to prevent data loss. All files will be lost each time the RAMDISK is stopped if you do not backup.
  - **Browse Button** - set the path to the image file.
  - **Backup Right Now Button** - manually backup files.
  - **Restore On Boot** - check this box to have the image file loaded automatically when RAMDISK starts.
  - **Auto Backup** - check this box to backup automatically over a period of time.
- **Apply Button** - allows you to apply changes.
- **Management** - shows RAMDISK information and allows you to delete files.

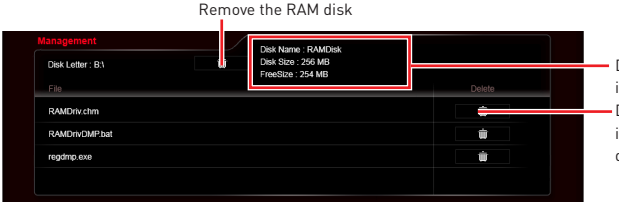

GAMING LAN MANAGER

GAMING LAN MANAGER is an utility for traffic shaping for the Windows 10. It can keep your internet fast during heavy upload/ download and improve your ping for online games. If your motherboard has a Wi-Fi module, GAMING LAN MANAGER provides virtual access point function for traffic shaping for your mobile devices.

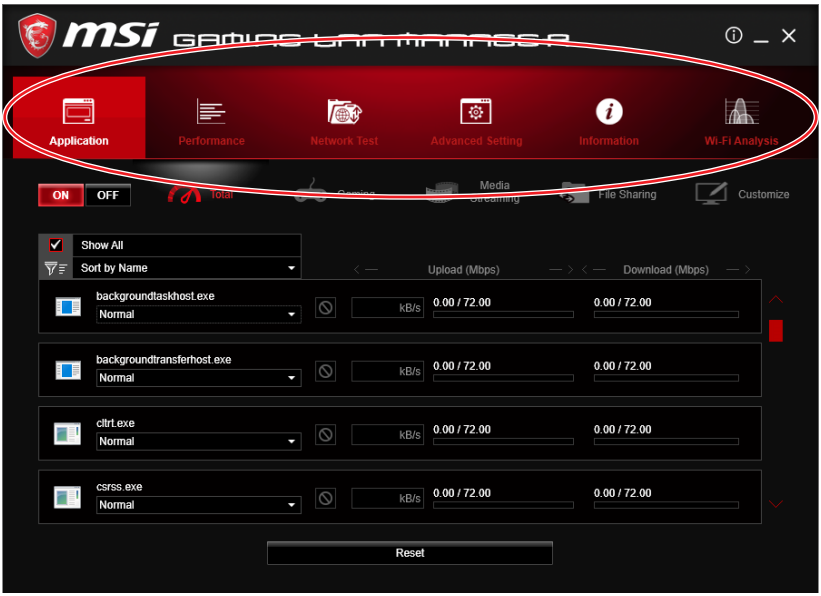

• **Applications** - displays currently using network bandwidth applications. You can prioritize Games, Medias or File sharing programs as high as possible.

• **Performance** - shows top 5 applications by total traffic, allows you to monitor network bandwidth usage.

• **Network Test** - allows you to setup bandwidth control.

• **Advanced Setting** - allows you to expand RWIN to accelerate download speed. You can also block IP address and setup virtual access point.

• **Information** - shows version information.

• **WiFi Analysis** - shows wireless signal strength and information.

Configuring Bandwidth

This section describes how to configure Internet Provider Speed. You can configure default internet upload and download bandwidth from the Network Test tab on the GAMING LAN MANAGER window.

Important

*Before using the GAMING LAN MANAGER for the first time, you should use the **Test Network Speed** button which runs a speed test of your current total Internet bandwidth delivered through your Internet service provider.*

To test the Upload and Download speed and configure bandwidth, please follow the steps below:

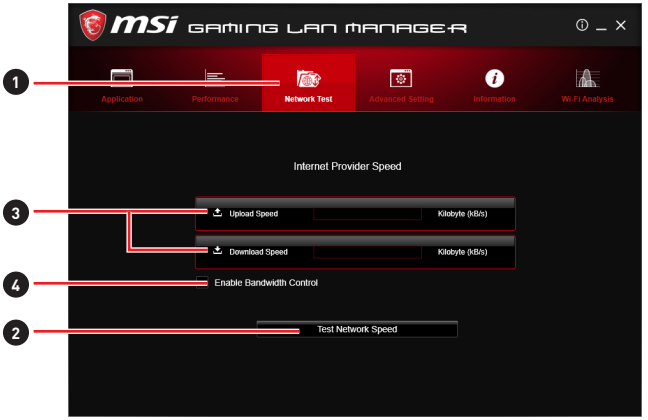

1. Click the **Network Test** block in GAMING LAN MANAGER.
2. Click **Test Network Speed** button. The test takes several minutes to test your network speed.
3. Enter the testing results into **Upload Speed** and **Download Speed** fields.
4. Check the **Enable Bandwidth Control** to allow the GAMING LAN MANAGER to manage the bandwidth.

Nahimic 3

Nahimic 3 is designed to offer the best audio experience it contains audio effects, microphone effects and Sound Tracker.

Installation and Update

Nahimic 3 is included in the audio driver. If you need to install it or update it, please use the **Driver Disc** with your motherboard or download the driver from MSI' s official website.

Audio Tab

From this tab, you can access all of Nahimic 3' s audio effects, audio profiles and settings.

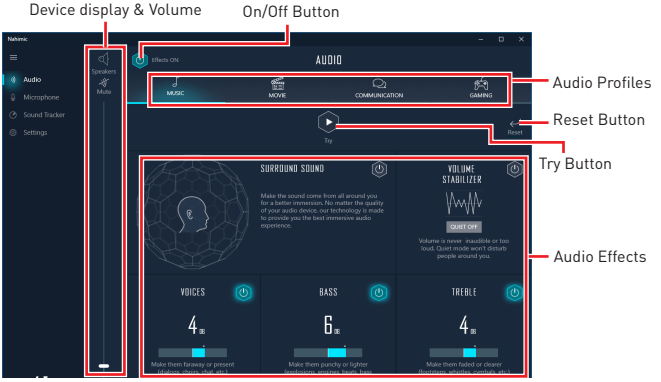

• **Device display & Volume** - displays the type of audio device currently being used as output, as well as its current volume.

  ▪ **Mute** - mutes the current audio output device.

• **Audio profiles** - allows you to choose between 4 factory audio profiles to fit your multimedia experience (Music, Gaming, Movie or Communication). All profiles can be modified as you wish.

• **On/Off Button** - allows you to turn all of Nahimic 3' s audio effects in one click.

• **Audio Effects** - allows you to separately control any of the 5 audio effects.

  ▪ **Surround Sound** - it is an audio effect mainly dedicated to headphones acoustic experience.

    ‣ **Gaming and Movies** - virtualizes the multichannel audio stream from the game engine or the movie soundtrack and downmixes it in order to retrieve a multichannel listening experience over your stereo headphones or speakers.

    ‣ **Music** - expands the stereo for a wider sound stage.

  ▪ **Volume Stabilizer** - it maintains a constant volume for all elements of the audio experience (dialogs, soundtrack, explosions, etc.) to make them all sound softer, balanced or louder. The Quiet On / Off option allows to enter a night mode by removing some basses. This way, you won' t disturb people around you if you' re using speakers to play your media.

- **Voices** - it boosts (or removes) the speech in movies, video games and incoming communication from -12 to +12 dB.
- **Bass** - increases (or decreases) the energy in low frequencies from -12 to +12 dB.
- **Treble** - increases (or decreases) the energy in high frequencies from -12 to +12 dB.

• **Reset Button** - restores the current profile to its default values.

• **Try Button** - launches an audio sample that allows to test audio settings.

Microphone Tab

From this tab, you can access all of Nahimic 3' s microphone effects and settings.

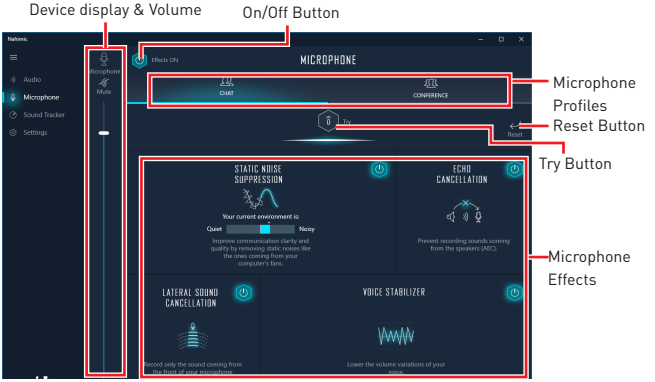

• **Device display and volume** - displays the type of recording device currently being used as input, as well as its current volume..

- **Mute** - mutes the current mic device.

• **Mic profiles** - allows you to choose between 2 factory mic profiles to fit your experience (Chat or Conference). All profiles can be modified as you wish.

• **On / Off button** - allows you to turn on and off all Nahimic 3' s microphone effects in one click.

• **Microphone Effects** - allows you to separately control any of the 4 microphone effects.

- **Static Noise Suppression** - it removes the static noises like the ones coming from your computer fans.
- **Echo Cancellation** - improves the voice quality by cancelling the echo.
- **Lateral Sound Cancellation** - it only records the sound coming from the front of your microphone.
- **Voice Stabilizer** - Levels the volume of your voice in order to avoid any saturation and maintains a constant and clear communication.

• **Reset Button** - restores the current profile to its default values.

• **Try Button** - Turns the microphone loopback On/Off.

Sound Tracker Tab

The Sound Tracker is an FPS oriented feature that provides a visual indication localizing the sources of the sounds while in a game. These are represented by dynamic segments pointing the direction of the sounds: the more opaque they are, the stronger the sounds are. Thanks to this feature, players are able to pick up an approaching threat more definitively and easily, thereby being even more dynamic. The Sound Tracker captures the 5.1 and 7.1 sound streams processed by your audio system, and is displayed in the applications and games using DirectX 9, 9c, 10 and 11.

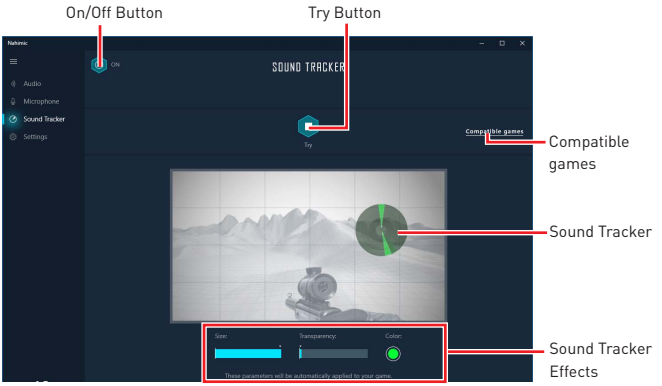

- **ON / OFF Button** - allows you to enable/ disable the Sound Tracker by switching this option ON/ OFF.
- **Try Button** - launch a 7.1 audio sample allowing you to preview how the radar will react in your game.
- **Sound Tracker Effects**
  - **Size** - allows you to adjust the scale of the Sound Tracker, making it look bigger or smaller.
  - **Transparency** - allows you to adjust the transparency of the Sound Tracker, making it look more or less discrete.
  - **Color** - click the colored circle to open the color edition window. You can apply the color you want to the dynamic segments.
- **Compatible games** - clicking this link opens the official Nahimic website, and leads to the list of compatible games able to display the Sound Tracker.

Settings Tab

In this section, it allows you to select the language of Nahimic 3' s UI.

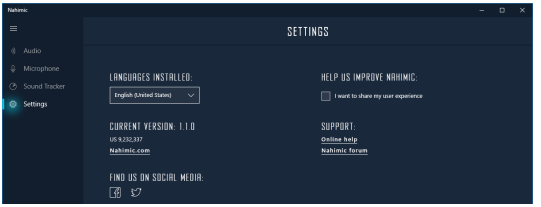

Troubleshooting

Before sending the motherboard for RMA repair, try to go over troubleshooting guide first to see if your got similar symptoms as mentioned below.

The power is not on.

• Connect the AC power cord to an electrical outlet securely.

• Check if all ATX power connectors like **ATX_PWR1, CPU_PWR1, CPU_PWR2** are connected from the power supply to the motherboard?

• Some power supply units have a power button on the rear side, make sure the button is turned on.

• Check if the power switch cable is connected to **JFP1** pin header properly.

• Verify the **Clear CMOS** jumper **JBAT1** is set to **Keep DATA**.

• Test with another known working power supply of equal or greater wattage.

The power is on, but no signal to monitor

• Connect the monitor power cord to a electrical outlet securely.

• Make sure the monitor is turned on.

• Select different inputs on the monitor.

• If 3 long beeps are heard, remove all memory modules and try to install only one memory module in the **DIMMB2** slot first and then restart the computer.

• If 1 long 2 short beeps are heard, remove and reinstall the graphics card and then restart the computer.

• Test with another known working graphics card.

The computer does not boot after updating the BIOS

• Clear the CMOS.

• Use the secondary BIOS to bootup the system (Only for motherboard with Dual BIOS)

Lost BIOS password

• Clear the CMOS, but that will cause you to lose all customized settings in the BIOS.

There is no audio

• Adjust the volume.

• Connect the speakers/headphones to audio ports on the motherboard rear IO panel.

• Remove secondary speakers/ headphones, HDMI cables, USB audio devices.

• Test with another known working speaker or headphone.

There is no network

• Make sure the network chipset driver has been installed.

• Verify if the network cable is properly connected and make sure the LAN port LEDs are properly illuminated.

• Verify your TCP/IP settings.

• Restart or reset your router.

• Test with another known working LAN cable.

The USB device is not working

• Make sure your USB drive driver has been installed.

• Verify if USB device is listed in Windows® Device Manager.

• Connect the USB device to other USB port on the motherboard rear IO panel.

Regulatory Notices

FCC Compliance Statement

Note: This equipment has been tested and found to comply with the limits for a Class B digital device, pursuant to part 15 of the FCC Rules. These limits are designed to provide reasonable protection against harmful interference in a residential installation. This equipment generates, uses and can radiate radio frequency energy and, if not installed and used in accordance with the instructions, may cause harmful interference to radio communications. However, there is no guarantee that interference will not occur in a particular installation. If this equipment does cause harmful interference to radio or television reception, which can be determined by turning the equipment off and on, the user is encouraged to try to correct the interference by one or more of the following measures:

- Reorient or relocate the receiving antenna.
- Increase the separation between the equipment and receiver.
- Connect the equipment into an outlet on a circuit different from that to which the receiver is connected.
- Consult the dealer or an experienced radio/TV technician for help.

Caution: Changes or modifications not expressly approved by the party responsible for compliance could void the user's authority to operate the equipment.

Tested to comply with FCC standards
FOR HOME OR OFFICE USE

This device complies with part 15 of the FCC Rules. Operation is subject to the following two conditions: (1) This device may not cause harmful interference, and (2) this device must accept any interference received, including interference that may cause undesired operation.

CE Conformity

Products bearing the CE marking comply with one or more of the following EU Directives as may be applicable:
RED 2014/53/EU; Low Voltage Directive 2014/35/EU; EMC Directive 2014/30/EU; RoHS Directive 2011/65/EU.
Compliance with these directives is assessed using applicable European Harmonized Standards.
The point of contact for regulatory matters is MSI, MSI-NL Eindhoven 5706 5692 ER Son.

B급 기기 (가정용 방송통신기자재)

이 기기는 가정용(B급) 전자파적합기기로서 주로 가정에서 사용하는 것을 목적으로 하며, 모든 지역에서 사용할 수 있습니다.

クラスB情報技術装置

この装置は、クラスB情報技術装置です。この装置は、家庭環境で使用することを目的としていますが、この装置がラジオやテレビジョン受信機に近接して使用されると、受信障害を引き起こすことがあります。取扱説明書に従って正しい取り扱いをして下さい

VCCI-B

C-Tick Compliance

N1996

Battery Information

European Union:

Batteries, battery packs, and accumulators should not be disposed of as unsorted household waste. Please use the public collection system to return, recycle, or treat them in compliance with the local regulations.

Taiwan:

廢電池請回收
For better environmental protection, waste batteries should be collected separately for recycling or special disposal.

California, USA:

The button cell battery may contain perchlorate material and requires special handling when recycled or disposed of in California.
For further information please visit:
http://www.dtsc.ca.gov/hazardouswaste/perchlorate/

CAUTION: There is a risk of explosion, if battery is incorrectly replaced.
Replace only with the same or equivalent type recommended by the manufacturer.

Chemical Substances Information

In compliance with chemical substances regulations, such as the EU REACH Regulation (Regulation EC No. 1907/2006 of the European Parliament and the Council), MSI provides the information of chemical substances in products at:
http://www.msi.com/html/popup/csr/evmtprtt_pcm.html

Environmental Policy

- The product has been designed to enable proper reuse of parts and recycling and should not be thrown away at its end of life.
- Users should contact the local authorized point of collection for recycling and disposing of their end-of-life products.
- Visit the MSI website and locate a nearby distributor for further recycling information.
- Users may also reach us at gpcontdev@msi.com for information regarding proper Disposal, Take-back, Recycling, and Disassembly of MSI products.

WEEE (Waste Electrical and Electronic Equipment) Statement

ENGLISH
To protect the global environment and as an environmentalist, MSI must remind you that...
Under the European Union ("EU") Directive on Waste Electrical and Electronic Equipment, Directive 2002/96/EC, which takes effect on August 13, 2005, products of "electrical and electronic equipment" cannot

be discarded as municipal wastes anymore, and manufacturers of covered electronic equipment will be obligated to take back such products at the end of their useful life. MSI will comply with the product take back requirements at the end of life of MSI-branded products that are sold into the EU. You can return these products to local collection points.

DEUTSCH
Hinweis von MSI zur Erhaltung und Schutz unserer Umwelt
Gemäß der Richtlinie 2002/96/EG über Elektro- und Elektronik-Altgeräte dürfen Elektro- und Elektronik-Altgeräte nicht mehr als kommunale Abfälle entsorgt werden. MSI hat europaweit verschiedene Sammel- und Recyclingunternehmen beauftragt, die in die Europäische Union in Verkehr gebrachten Produkte, am Ende seines Lebenszyklus zurückzunehmen. Bitte entsorgen Sie dieses Produkt zum gegebenen Zeitpunkt ausschliesslich an einer lokalen Altgerätesammelstelle in Ihrer Nähe.

FRANÇAIS
En tant qu'écologiste et afin de protéger l'environnement, MSI tient à rappeler ceci...
Au sujet de la directive européenne (EU) relative aux déchets des équipement électriques et électroniques, directive 2002/96/EC, prenant effet le 13 août 2005, que les produits électriques et électroniques ne peuvent être déposés dans les décharges ou tout simplement mis à la poubelle. Les fabricants de ces équipements seront obligés de récupérer certains produits en fin de vie. MSI prendra en compte cette exigence relative au retour des produits en fin de vie au sein de la communauté européenne. Par conséquent vous pouvez retourner localement ces matériels dans les points de collecte.

РУССКИЙ
Компания MSI предпринимает активные действия по защите окружающей среды, поэтому напоминаем вам, что....
В соответствии с директивой Европейского Союза (ЕС) по предотвращению загрязнения окружающей среды использованным электрическим и электронным оборудованием (директива WEEE 2002/96/EC), вступающей в силу 13 августа 2005 года, изделия, относящиеся к электрическому и электронному оборудованию, не могут рассматриваться как бытовой мусор, поэтому производители вышеперечисленного электронного оборудования обязаны принимать его для переработки по окончании срока службы. MSI обязуется соблюдать требования по приему продукции, проданной под маркой MSI на территории ЕС, в переработку по окончании срока службы. Вы можете вернуть эти изделия в специализированные пункты приема.

ESPAÑOL
MSI como empresa comprometida con la protección del medio ambiente, recomienda:
Bajo la directiva 2002/96/EC de la Unión Europea en materia de desechos y/o equipos electrónicos, con fecha de rigor desde el 13 de agosto de 2005, los productos clasificados como "eléctricos y equipos electrónicos" no pueden ser depositados en los contenedores habituales de su municipio, los fabricantes de equipos electrónicos, están obligados a hacerse cargo de dichos productos al termino de su período de vida. MSI estará comprometido con los términos de recogida de sus productos vendidos en la Unión Europea al final de su periodo de vida. Usted debe depositar estos productos en el punto limpio establecido por el ayuntamiento de su localidad o entregar a una empresa autorizada para la recogida de estos residuos.

NEDERLANDS
Om het milieu te beschermen, wil MSI u eraan herinneren dat....
De richtlijn van de Europese Unie (EU) met betrekking tot Vervuiling van Electrische en Electronische producten (2002/96/EC), die op 13 Augustus 2005 in zal gaan kunnen niet meer beschouwd worden als vervuiling. Fabrikanten van dit soort producten worden verplicht om producten retour te nemen aan het eind van hun levenscyclus. MSI zal overeenkomstig de richtlijn handelen voor de producten die de merknaam MSI dragen en verkocht zijn in de EU. Deze goederen kunnen geretourneerd worden op lokale inzamelingspunten.

SRPSKI
Da bi zaštitili prirodnu sredinu, i kao preduzeće koje vodi računa o okolini i prirodnoj sredini, MSI mora da vas podesti da...
Po Direktivi Evropske unije ("EU") o odbačenoj ekektronskoj i električnoj opremi, Direktiva 2002/96/EC, koja stupa na snagu od 13. Avgusta 2005, proizvodi koji spadaju pod "elektronsku i električnu opremu" ne mogu više biti odbačeni kao običan otpad i proizvođači ove opreme biće prinuđeni da uzmu natrag ove proizvode na kraju njihovog uobičajenog veka trajanja. MSI će poštovati zahtev o preuzimanju ovakvih proizvoda kojima je istekao vek trajanja, koji imaju MSI oznaku i koji su prodati u EU. Ove proizvode možete vratiti na lokalnim mestima za prikupljanje.

POLSKI
Aby chronić nasze środowisko naturalne oraz jako firma dbająca o ekologię, MSI przypomina, że...
Zgodnie z Dyrektywą Unii Europejskiej ("UE") dotyczącą odpadów produktów elektrycznych i elektronicznych (Dyrektywa 2002/96/EC), która wchodzi w życie 13 sierpnia 2005, tzw. "produkty oraz wyposażenie elektryczne i elektroniczne " nie mogą być traktowane jako śmieci komunalne, tak więc producenci tych produktów będą zobowiązani do odbierania ich w momencie gdy produkt jest wycofywany z użycia. MSI wypełni wymagania UE, przyjmując produkty (sprzedawane na terenie Unii Europejskiej) wycofywane z użycia. Produkty MSI będzie można zwracać w wyznaczonych punktach zbiorczych.

TÜRKÇE
Çevreci özelliğiyle bilinen MSI dünyada çevreyi korumak için hatırlatır:
Avrupa Birliği (AB) Kararnamesi Elektrik ve Elektronik Malzeme Atığı, 2002/96/EC Kararnamesi altında 13 Ağustos 2005 tarihinden itibaren geçerli olmak üzere, elektrikli ve elektronik malzemeler diğer atıklar gibi çöpe atılamayacak ve bu elektonik cihazların üreticileri, cihazların kullanım süreleri bittikten sonra ürünleri geri toplamakla yükümlü olacaktır. Avrupa Birliği'ne satılan MSI markalı ürünlerin kullanım süreleri bittiğinde MSI ürünlerin geri alınması isteği ile işbirliği içerisinde olacaktır. Ürünlerinizi yerel toplama noktalarına bırakabilirsiniz.

ČESKY
Záleží nám na ochraně životního prostředí - společnost MSI upozorňuje...
Podle směrnice Evropské unie ("EU") o likvidaci elektrických a elektronických výrobků 2002/96/

EC platné od 13. srpna 2005 je zakázáno likvidovat "elektrické a elektronické výrobky" v běžném komunálním odpadu a výrobci elektronických výrobků, na které se tato směrnice vztahuje, budou povinni odebírat takové výrobky zpět po skončení jejich životnosti. Společnost MSI splní požadavky na odebírání výrobků značky MSI, prodávaných v zemích EU, po skončení jejich životnosti. Tyto výrobky můžete odevzdat v místních sběrnách.

MAGYAR
Annak érdekében, hogy környezetünket megvédjük, illetve környezetvédőként fellépve az MSI emlékezteti Önt, hogy ...
Az Európai Unió („EU") 2005. augusztus 13-án hatályba lépő, az elektromos és elektronikus berendezések hulladékairól szóló 2002/96/EK irányelve szerint az elektromos és elektronikus berendezések többé nem kezelhetőek lakossági hulladékként, és az ilyen elektronikus berendezések gyártói kötelessé válnak az ilyen termékek visszavételére azok hasznos élettartama végén. Az MSI betartja a termékvisszavétellel kapcsolatos követelményeket az MSI márkanév alatt az EU-n belül értékesített termékek esetében, azok élettartamának végén. Az ilyen termékeket a legközelebbi gyűjtőhelyre viheti.

ITALIANO
Per proteggere l'ambiente, MSI, da sempre amica della natura, ti ricorda che....
In base alla Direttiva dell'Unione Europea (EU) sullo Smaltimento dei Materiali Elettrici ed Elettronici, Direttiva 2002/96/EC in vigore dal 13 Agosto 2005, prodotti appartenenti alla categoria dei Materiali Elettrici ed Elettronici non possono più essere eliminati come rifiuti municipali: i produttori di detti materiali saranno obbligati a ritirare ogni prodotto alla fine del suo ciclo di vita. MSI si adeguerà a tale Direttiva ritirando tutti i prodotti marchiati MSI che sono stati venduti all'interno dell'Unione Europea alla fine del loro ciclo di vita. È possibile portare i prodotti nel più vicino punto di raccolta

日本JIS C 0950材質宣言

日本工業規格JIS C 0950により、2006年7月1日以降に販売される特定分野の電気および電子機器について、製造者による含有物質の表示が義務付けられます。
http://www.msi.com/html/popup/csr/cemm_jp.html
http://tw.msi.com/html/popup/csr_tw/cemm_jp.html

India RoHS

This product complies with the "India E-waste (Management and Handling) Rule 2011" and prohibits use of lead, mercury, hexavalent chromium, polybrominated biphenyls or polybrominated diphenyl ethers in concentrations exceeding 0.1 weight % and 0.01 weight % for cadmium, except for the exemptions set in Schedule 2 of the Rule.

Türkiye EEE yönetmeliği

Türkiye Cumhuriyeti: EEE Yönetmeliğine Uygundur

Україна обмеження на наявність небезпечних речовин

Обладнання відповідає вимогам Технічного регламенту щодо обмеження використання деяких небезпечних речовин в електричному та електронному обладнані, затвердженого постановою Кабінету Міністрів України від 3 грудня 2008 № 1057.

Việt Nam RoHS

Kể từ ngày 01/12/2012, tất cả các sản phẩm do công ty MSI sản xuất tuân thủ Thông tư số 30/2011/TT-BCT quy định tạm thời về giới hạn hàm lượng cho phép của một số hóa chất độc hại có trong các sản phẩm điện, điện tử"

Wireless Radio Use

This device is restricted to indoor use when operating in the 2.4GHz, 5GHz frequency band.

Cet appareil doit être utilisé à l' intérieur.

당해 무선설비는 운용중 전파혼신 가능성이 있음.

この製品は、周波数帯域 2.4GHz, 5GHz で動作しているときは、屋内においてのみ使用可能です。

NCC無線設備警告聲明
工作頻率2.4GHz, 5GHz該頻段限於室內使用。
經型式認證合格之低功率射頻電機，非經許可，公司、商號或使用者均不得擅自變更頻率、加大功率或變更原設計之特性及功能。
低功率射頻電機之使用不得影響飛航安全及干擾合法通信；經發現有干擾現象時，應立即停用，並改善至無干擾時方得繼續使用。前項合法通信，指依電信法規定作業之無線電通信。低功率射頻電機須忍受合法通信或工業、科學及醫療用電波輻射性電機設備之干擾。

Products with radio functionality (EMF)
This product incorporates a radio transmitting and receiving device. For computers in normal use, a separation distance of 20 cm ensures that radio frequency exposure levels comply with EU requirements. Products designed to be operated at closer proximities, such as tablet computers, comply with applicable EU requirements in typical operating positions. Products can be operated without maintaining a separation distance unless otherwise indicated in instructions specific to the product.

Restrictions for products with radio functionality
CAUTION: IEEE 802.11x wireless LAN with 5.15–5.35 GHz frequency band is restricted for indoor use only in all European Union member states, EFTA (Iceland, Norway, Liechtenstein), and most other European countries (e.g., Switzerland, Turkey, Republic of Serbia). Using this WLAN application outdoors might lead to interference issues with existing radio services.

Radio frequency bands and maximum power levels

Features	:802.11 a/b/g/n/ac, BT
Frequency Range	:2.4GHz, 5GHz
Modulation	:FHSS, DSSS, OFDM
Power Output	:10, 20, 23
Channel Band Width	:1, 5, 20 ,40 , 80MHz

产品中有害物质的名称及含量

部件名称	有害物质					
	铅 (Pb)	汞 (Hg)	镉 (Cd)	六价铬 (Cr(VI))	多溴联苯 (PBB)	多溴二苯醚 (PBDE)
印刷电路板组件*	×	○	○	○	○	○
电池**	×	○	○	○	○	○
外部信号连接头	×	○	○	○	○	○
线材	×	○	○	○	○	○

本表格依据 SJ/T 11364 的规定编制。

○: 表示该有害物质在该部件所有均质材料中的含量均在 GB/T 26572 规定的限量要求以下。

×: 表示该有害物质至少在该部件的某一均质材料中的含量超出 GB/T 26572 规定的限量要求，但所有部件都符合欧盟RoHS要求。

* 印刷电路板组件: 包括印刷电路板及其构成的零部件。

** 电池本体上如有环保使用期限标识，以本体标识为主。

■ 上述有毒有害物质或元素清单会依型号之部件差异而有所增减。

■ 產品部件本体上如有环保使用期限标识，以本体标识为主。

限用物質含有情況標示聲明書

單元	限用物質及其化學符號					
	鉛 (Pb)	汞 (Hg)	鎘 (Cd)	六價鉻 (Cr^{+6})	多溴聯苯 (PBB)	多溴二苯醚 (PBDE)
電路板	○	○	○	○	○	○
電子元件	—	○	○	○	○	○
金屬機構件	—	○	○	○	○	○
塑膠機構件	○	○	○	○	○	○

備考1. “超出0.1 wt %” 及 “超出0.01 wt %” 係指限用物質之百分比含量超出百分比含量基準值。

備考2. “○” 係指該項限用物質之百分比含量未超出百分比含量基準值。

備考3. “—” 係指該項限用物質為排除項目。

Copyright

MSI Micro-Star Int' l Co.,Ltd.
Copyright © 2018 All rights reserved.

The material in this document is the intellectual property of Micro-Star Int' l Co.,Ltd. We take every care in the preparation of this document, but no guarantee is given as to the correctness of its contents. Our products are under continual improvement and we reserve the right to make changes without notice.

Technical Support

If a problem arises with your system and no solution can be obtained from the user guide, please contact your place of purchase or local distributor. Alternatively, please try the following help resources for further guidance.

- Visit the MSI website for technical guide, BIOS updates, driver updates, and other information: http://**www.msi.com**
- Register your product at: http://**register.msi.com**

Trademark Recognition

All product names used in this manual are the properties of their respective owners and are acknowledged.

Revision History

Version 1.0, 2018/06, First release.
Version 1.1, 2018/08, Updated release.