IFW 5844 IX

12NC: F102894

GTIN (EAN) code: 8050147028940



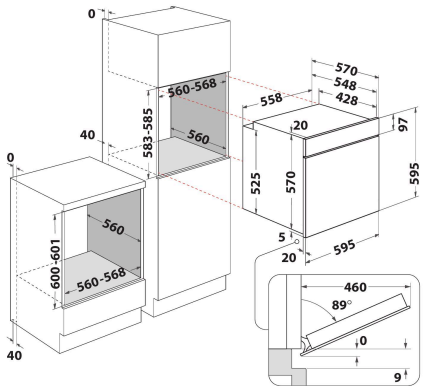

MAIN FEATURES

Product group	Oven
Commercial code	IFW 5844 IX
Main colour of product	Inox
Construction type	Built-in
Type of control	Electronic
Type of control settings	-
Are any hobs controls integrated?	No
Which kind of hobs can be controlled?	-
Automatic programmes	Yes
Current (A)	13
Voltage (V)	220-240
Frequency (Hz)	50/60
Length of Electrical Supply Cord (cm)	100
Plug type	No
Depth with open door 90 degree (mm)	-
Height of the product	595
Width of the product	595
Depth of the product	551
Minimum niche height	0
Minimum niche width	0
Niche depth	0
Net weight (kg)	26.9
Usable volume (of cavity)	71
Integrated Cleaning system	No
Grids of the cavity	2
Trays	1

TECHNICAL FEATURES

Timer	-
Time control	Electronic
Time-setting options	Stop
Safety device	-
Interior light	Yes
Number of interior lights of the cavity	1
Position of interior lights of the cavity	Front left
Oven guides of the cavity	Grids
Probe of the cavity	No

PERFORMANCES

Energy input	Electric
Type of energy of the cavity	Electricity
Energy efficiency class - NEW (2010/30/EU)	A+
Energy consumption per cycle conventional - NEW (2010/30/EU)	0.89
Energy consumption per cycle forced air convection - NEW (2010/30/EU)	0.69