HOOVER

INSTRUCTION MANUAL



BORN INNOVATIVE

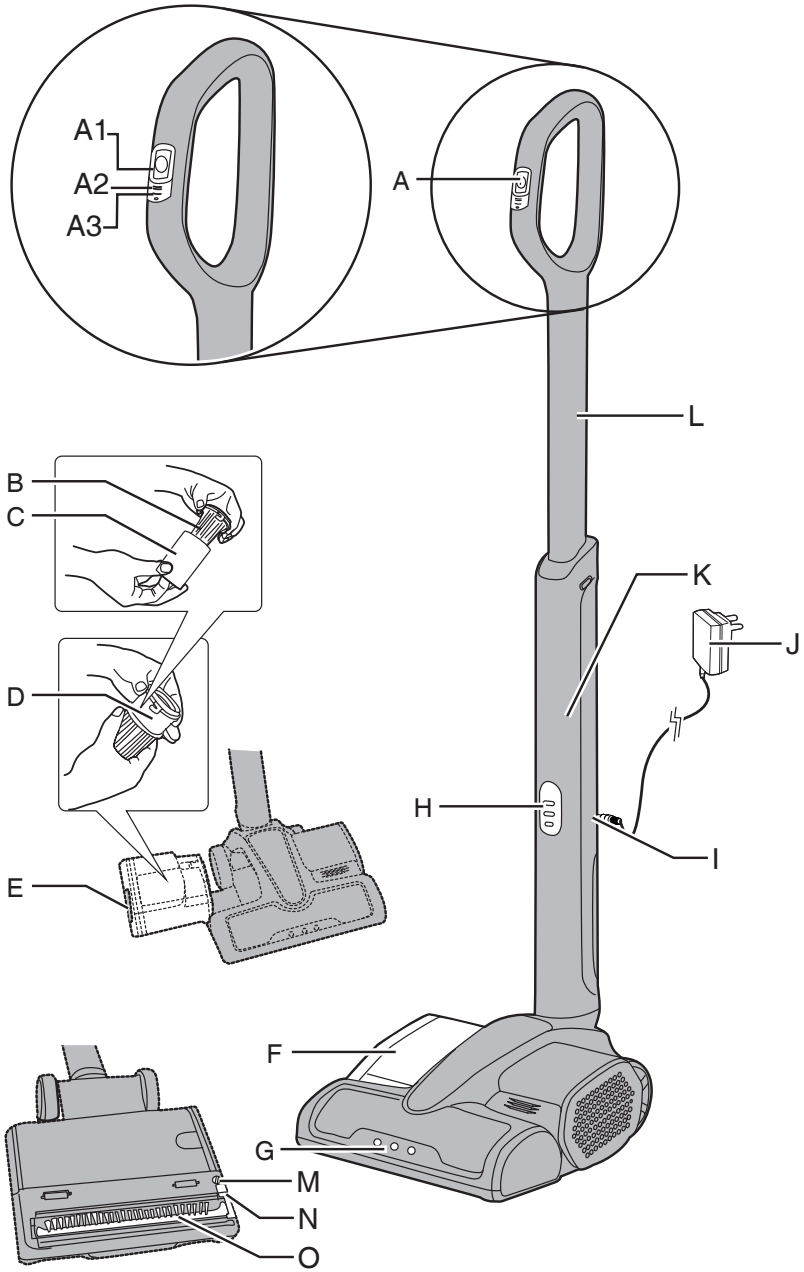
A1
A2
A3
A
L
B
C
K
J
D
H
I
E
F
G
M
N
O

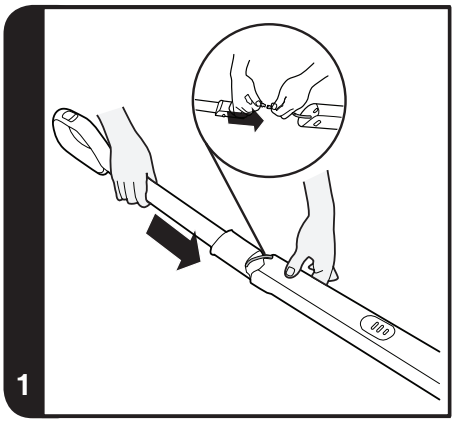
1

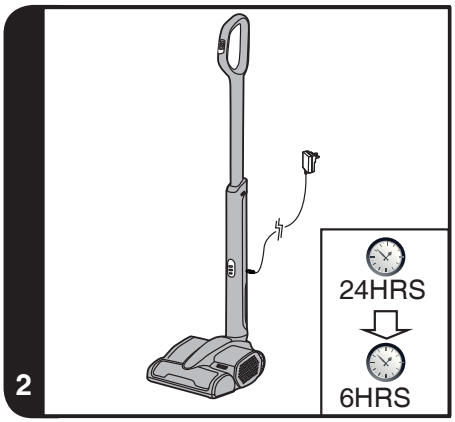
2
24HRS
6HRS

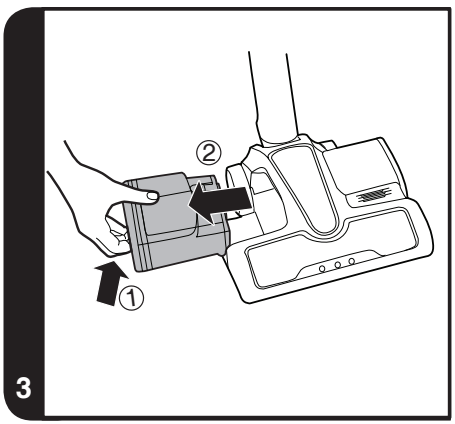
3
②
①

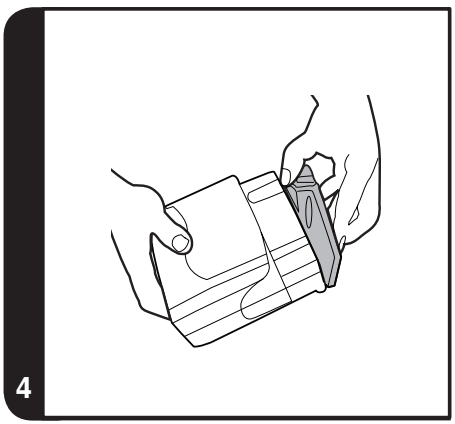
4

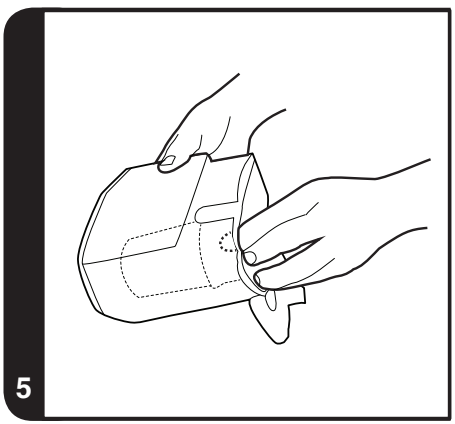
5

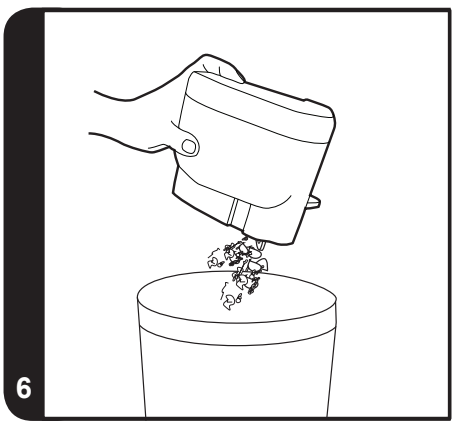
6

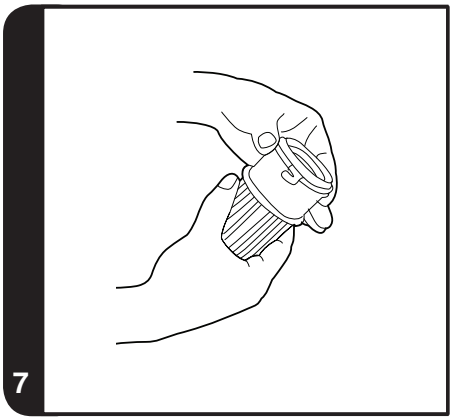
7

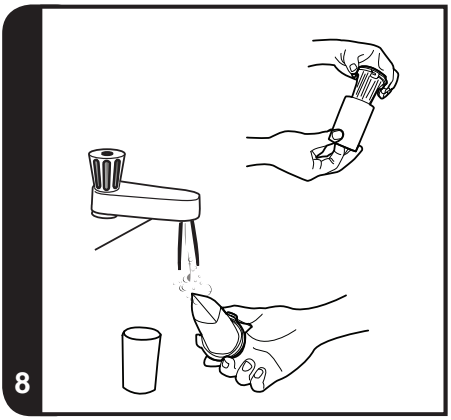
8

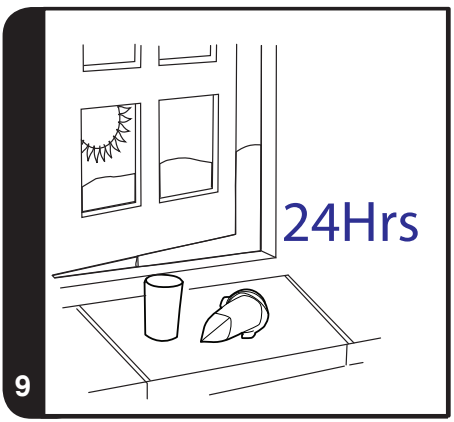
24Hrs
9

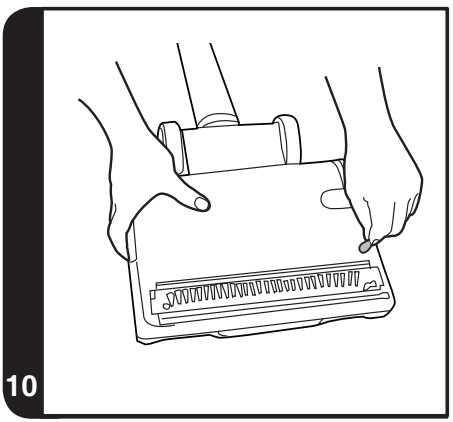
10

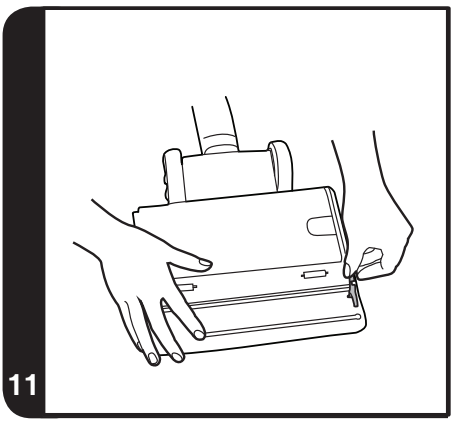
11

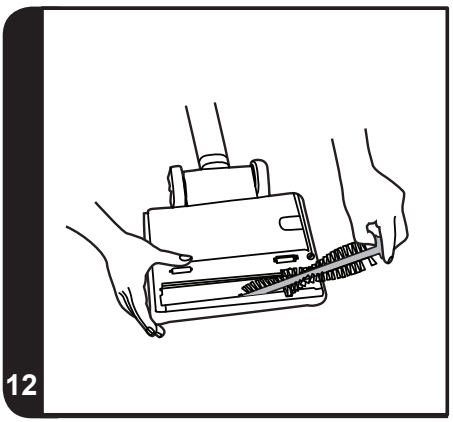
12

INSTRUCTIONS FOR SAFE USE

This appliance should only be used for domestic cleaning, as described in this user guide. Please ensure that this guide is fully understood before operating the appliance.

Always switch off and remove the charger from the socket before cleaning the appliance or any maintenance task.

This appliance can be used by children aged from 8 years and above and persons with reduced physical, sensory or mental capabilities or lack of experience and knowledge if they have been given supervision or instruction concerning use of the appliance in a safe way and understand the hazards involved. Children shall not play with the appliance. Cleaning and user maintenance shall not be made by children without supervision.

If the power cord is damaged stop using the appliance immediately. To avoid a safety hazard, an authorised Hoover service engineer must replace the power cord.

Keep hands, feet, loose clothing and hair away from rotating brushes.

Use only the original charger supplied with the appliance.

Check that your supply voltage is the same as that stated on the charger.

This appliance is supplied with a double insulated battery charger which is only suitable for insertion in a 230V (UK 240V) socket outlet.

Plug the charger in to suitable socket outlet and connect the power cord connector to the DC socket on the appliance. **[2]**

When charging the appliance, the power switch must be off.

Before first use, charge your appliance for 24 hours.

Do plug in the charger after use to recharge the batteries.

It is normal for the charger to become warm to the touch when charging.

Do not unplug the charger by pulling on the power cord.

Unplug the charger in the event of prolonged absence (holidays, etc.). Recharge appliance again before use as batteries may self discharge over increased periods of storage.

If the appliance is to be disposed of the batteries must first be removed. The appliance must be disconnected from the supply mains when removing the battery. Dispose of the batteries safely.

Run the appliance until it stops because the batteries are fully discharged. Used batteries should be taken to a recycling station and not disposed of with household waste. To remove the batteries, please contact the Hoover Customer Centre or proceed according to the following instructions.

IMPORTANT: Always fully discharge the batteries before removal and ensure the charger is unplugged.

1. Run the cleaner until the batteries are completely empty.
2. Remove the ergonomic handle and the screws, in the main body to open the cleaner.
3. Remove the motor battery housing and disconnect the cables.
4. Remove the batteries from the housing.

NOTE: Should you experience any difficulty in dismantling the unit or for more detailed information on treatment, recovery and recycling of this appliance, please contact your local city office or your household waste disposal service.

DO NOT expose the batteries to a room temperature above 40°C.

Use only attachments, consumables or spares recommended or supplied by Hoover.

Static electricity: Some carpets can cause a small build up of static electricity. Any static discharge is not hazardous to health.

Do not use your appliance out of doors or on any wet surface or for wet pick up.

Do not pick up hard or sharp objects, matches, hot ashes, cigarette ends or other similar items.

Do not spray with or pick up flammable liquids, cleaning fluids, aerosols or their vapours.

Do not run over the power cord when using your appliance or remove the plug by pulling on the power cord.

Do not continue to use your appliance or charger if it appears faulty.

Hoover service: To ensure the continued safe and efficient operation of this appliance we recommend that any servicing or repairs are only carried out by an authorised Hoover service engineer.

Do not use the appliance to clean animals or people.

Do not replace the batteries with non-rechargeable batteries.

Do frequently clean the dust cup and filter assembly.

The Environment:

This appliance is marked according to the European directive 2011/65/EC on Waste Electrical and Electronic Equipment (WEEE). By ensuring this product is disposed of correctly, you will help prevent potential negative consequences for the environment and human health, which could otherwise be caused by inappropriate waste handling of this product. The symbol on the product indicates that this product may not be treated as household waste. Instead it shall be handed over to the applicable collection point for the recycling of electrical and electronic equipment. Disposal must be carried out in accordance with local environmental regulations for waste disposal. For more detailed information about treatment, recovery and recycling of this product, please contact your local city office, your household waste disposal service or the shop where you purchased the product.



CE This appliance complies with the European Directives 2014/35/EU, 2014/30/EUand 2011/65/EU.

CANDY HOOVER GROUP S.r.l. Via Privata Eden Fumagalli, 20861 Brugherio (MB) Italy

PRODUCT COMPONENTS

A. Power Regulation Button
   A1. OFF Position
   A2. HARD FLOOR Position
   A3. CARPET Position
B. Inner Filter
C. Sponge
D. Filter
E. Release Button
F. Dust Container
G. Nozzle LED
H. LED display
I. Charge Plug
J. Charger
K. Main Unit
L. Ergonomic Handle
M. Agitator cover lock
N. Agitator cover
O. Agitator

PREPARING YOU CLEANER

1. Assemble the connectors of the Ergonomic Handle and Main Unit, carefully push the wires into the Main Unit during assembly, ensure the wires do not become trapped until it locks into position. [**1]**
2. For first use, charge your cleaner for 24Hrs. After first use the normal charging time is 6Hrs. **[2]**
3. The LED will blink when charging and keep lighting when fully charged.

NOTE: Use only the charger supplied with your cleaner to recharge.
IMPORTANT: When charging the cleaner, the Power Regulation Button must be OFF.
It is normal for the charger to become warm to touch when charging.

USING YOUR CLEANER

Turn the cleaner on by sliding the power regulation button to the following settings:
• **HARD FLOOR:** First position of the power regulation button, the agitator and nozzle LED lights are OFF **[A2]**.
• **CARPET:** Second position of the power regulation button, the agitator and nozzle LED lights are ON **[A3]**.

Charging/Power Indication *

This cleaner is equipped with a LED display. When the product is working, the display will report the following indication:

BATTERY LEVEL INDICATOR:

- 3 points = 3/3 charge
- 2 points = 2/3 charge
- 1 point = 1/3 charge

DISCHARGE INDICATOR: When the batteries are fully discharged, the indicator will flash for around 20 seconds before cleaner turns off automatically.

CLEANER MAINTENANCE

Emptying the Dust Container

1. Press the release button of the dust container; lift the dust container from main body. **[3]**
2. Open the dust container and counter clock wise rotate the filter from the dust container. **[4,5]**
3. Counter clock wise rotate the inner filter from the filter, and pick the sponge out of the inner filter. Upside down over a bin to instantly empty them. **[7]**
4. Reassemble the filter to the dust container.
5. Reassemble the dust container to the main body. **[3]**

Cleaning the Filter

1. Press the release button of the dust container; lift the dust container from main body. **[3]**
2. Open the dust container and counter clock wise rotate the filter from the dust container.
3. Counter clock wise rotate the inner filter from the filter, and pick the sponge out of the inner filter. Wash the inner filter and the sponge in lukewarm water and leave to dry for 24 hours. Once thoroughly dry return to the dust container. **[8,9]**
4. If required, wash the dust container in lukewarm water. Ensure it is fully dry before returning to the main body of the cleaner.
5. Reassemble the filter to the dust container.
6. Reassemble the dust container to the main body.

NOTE: Do not use hot water or detergents when cleaning the filters. If incidental the filters are damaged, fit a genuine Hoover replacement. Do not try use the product without a filter fitted.
IMPORTANT: For optimum performance, always keep your filter clean. We recommend that the filter should be washed at least once a month.

Changing and Cleaning the Agitator

NOTE: To remove the agitator, switch the agitator cover lock to unlock position and pull away the agitator cover from the nozzle chassis. **[10,11,12]**
IMPORTANT: Do turn off the cleaner before changing the agitator.

1. Using a coin turn the lock to the unlock position. **[10]**
2. Remove the Agitator cover. **[11]**
3. Remove the Agitator. **[12]**
4. Replace with the new Agitator or clean it. This can only fit in one direction. **[12]**
5. Reassemble the Agitator cover and lock it with the coin.

Battery Replacement

For reasons of safety the Lithium-Ion batteries in this cleaner are only replaceable by a Hoover Service engineer. When the batteries fail to maintain charge, please contact the Hoover Customer Service Centre to arrange a replacement.

End of Product Life Battery Disposal

If the cleaner is to be disposed off the batteries should be removed. Used batteries should be taken to a recycling station and not disposed it to household waste. To remove the batteries, please contact the Hoover Customer Service Centre or proceed according to the following instructions:

IMPORTANT: Always fully discharge the batteries before removal and ensure charger is unplugged.

1. Run the unit until the batteries are completely empty.
2. Remove 1 screw and open the unit.
3. Remove the battery package and disconnect the cables.
4. Remove the batteries from the housing.

NOTE: Should you experience any difficulties in dismantling the unit or for more detailed information about treatment, recovery and recycling of this product, please contact your local city office, your household waste disposal service.

*** Features vary according to model**

TROUBLE SHOOTING

Should you have any problem with you cleaner, follow this simple check list before calling the Hoover Customer Service Centre:

A. Cleaner can't be turned on

Check if the cleaner is charged

B. Loss of suction or no suction

Empty the dust container and wash the filter

Remove nozzle and check for any blockages in the duct.

C.Batteries cannot be charged

This may be a result of very long storage periods (over half year).

Contact Hoover customer service to arrange battery replacement

If the problem persists contact the Hoover customer service centre.

HOOVER SPARES AND CONSUMABLES

Always replace parts with genuine HOOVER spares. These are available from your local HOOVER dealer or direct from HOOVER. When ordering parts always quote your model number.

IMPORTANT: The battery in this cleaner is guaranteed for 6 months from purchase. After 6 months the customer is liable for the cost of a new battery which will be fitted free of charge by an authorised HOOVER engineer.

YOUR GUARANTEE

The guarantee conditions for this appliance are as defined by our representative in the country in which it is sold. Details regarding these conditions can be obtained from the dealer from whom the appliance was purchased. The bill of sale or receipt must be produced when making any claim under the terms of this guarantee.

Subject to change without notice.



BORN INNOVATIVE

PRINTED IN P.R.C.
48022473/01