OLED Wallpaper Hotel TV with Premier IP&RF based Solution

WU960H

The world's best-selling OLED brand, LG OLED TV, embraces cutting edge Hospitality management technology -LG Pro:Centric SMART. It delivers greater usability and convenience for seamless exploration of TV content, and also provides great solutions for hotel management. Try this for superior interior and see how this Ultra-thin wallpaper design blend in to Hotel rooms.



LG | Business Solutions

A Seamless blend with your space

LG OLED TV adds an extra touch of style to your living space.
It harmonized naturally with their surroundings and elevates your home design to the next level. You can experience a work of art in Hotel room.



OLED Wallpaper Hotel TV with Premier IP&RF based Solution

WU960H

World’s Number 1 OLED

Perfect Black. Intense Color

LG OLED TV provides richness in all colors, boasts aesthetic touch of nature, and reveals life. Equipped with over 8 million of self-lightning pixels operating individually, the product completes the Perfect Black.



4K Cinema HDR

LG 4K Cinema HDR offers the filmmaker’s vision through usage of HDR formats. Now, a unique cinematic experience is available at hotel room with Dolby Vision™ and HDR 10.



OLED Wallpaper Hotel TV with Premier IP&RF based Solution

WU960H

World’s Number 1 OLED

Cinematic Sound for Your Home

Dolby Atmos® creates a dynamic and surround sound experiences although even when space is limited, facilitating the discernment of every details of the movement in a scene. With Dolby Vision™, the product provides a truly unique cinematic experience.



Picture-on-Glass, the Artistic Esthetics

Furnished with sleek wall-paper design, the product takes its artistic aspect to the next level. As the need for distinct elements like bezel or a thick stand has been eliminated, the refined but aesthetically stifled design intensifies the viewing experience.



OLED Wallpaper Hotel TV with Premier IP&RF based Solution

WU960H

World’s Number 1 OLED

OLED Gallery Mode

Bring the wonders of the world to your Hotel space with OLED Gallery Mode. From photography of beautiful places to world-renowned artwork, Gallery Mode provides a great selection of beautiful images and videos. Stunning contents creates a perfect atmosphere that suits your visitor's mood.



* Actual images(In-screen of TV) available may differ from the above simulated ones.

OLED Wallpaper Hotel TV with Premier IP&RF based Solution

WU960H

Pro:Centric Smart Application Platform

Pro:Centric Hotel Management Solution

Pro:Centric SMART is optimized for customizing hospitality services for hotel brands and guests through an IP & RF infrastructure. With its high picture quality, sophisticated design and advanced connectivity functions, it upscales in-room entertainment and increases convenience through implementation of high-end technology.

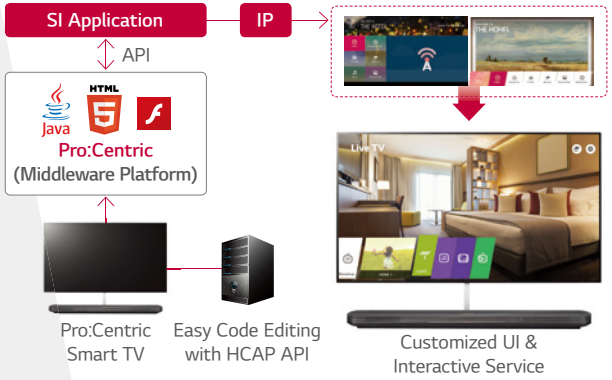

* Customized UI may differ

Pro:Centric Server Application

You can now differentiate your hotel with our customizable templates and pages which can be specialized for your property. Pro:Centric provides you a solution that is easily customizable for your business.

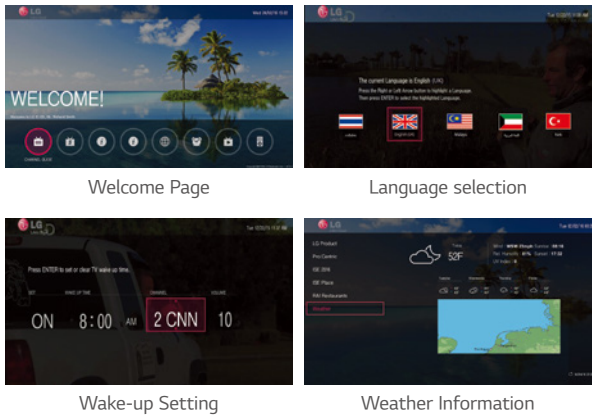

Welcome Page | Language selection

Wake-up Setting | Weather Information

Pro:Centric Direct Solution

Pro:Centric Direct is a hotel content management system that supports simple editing tools and provides various solutions such as 1-click service and IP-network-based remote management. With the solution, users enable to design UI easily and provide customized service while managing TV efficiently.

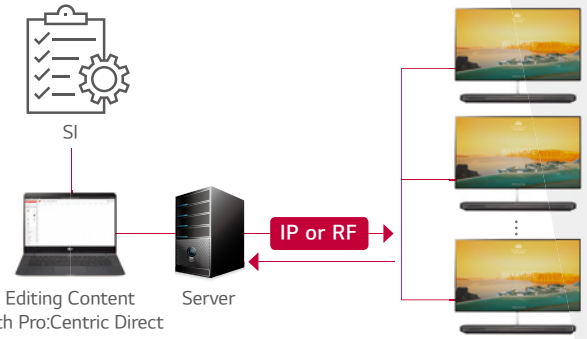

* Actual UI may differ

* When PCS400R and PCD 2.0 are used, it is able to have PCD feature even in RF infrastructure. However, to have interactive services in RF infrastructure, Wi-Fi is required (RF+Wireless Infrastructure is needed).

Dimension (unit: mm)

65"

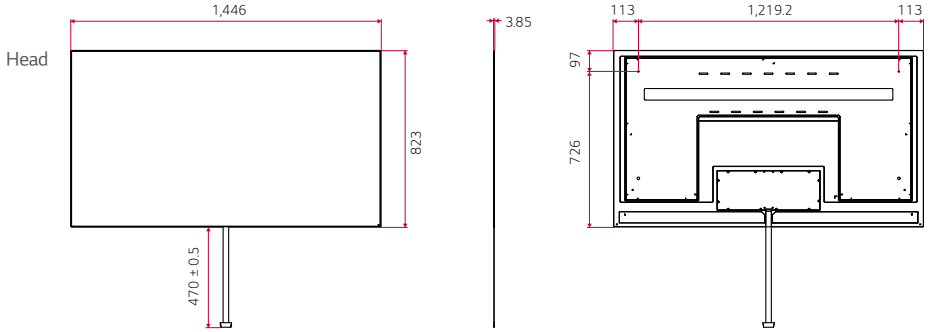

Connectivity

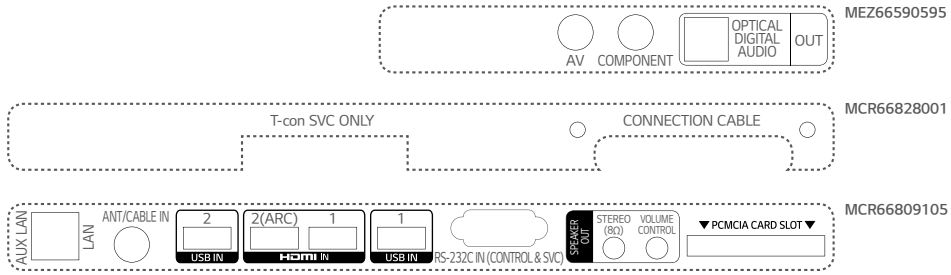

* Dimensions & Jack Panels (Read/Side) may differ from the above image, so please contact LG salesteam to verify before ordering.

Specifications

		WU960H
PANEL	Screen Size	65"
	Backlight Type	OLED (Wallpaper)
	Resolution	3,840 x 2,160 (4K UHD)
	Brightness (cd/m²)	400
	Dynamic Contrast Ratio (Dynamic MCI (Hz))	1,000,000:1
	Static (Panel) Contrast Ratio	1,400:1
	Viewing Angle (H x V)	120
	Response Time (G to G, ms)	5
BROADCASTING SYSTEM	Analog	• (PAL/SECAM)
	Digital	• (varied by countries)
VIDEO	XD Engine	•
	Aspect Ratio	• 5 modes (16:9, Original, 4:3, Vertical Zoom, All-Direction Zoom)
	HDR 10 / HDR Dolby Vision	• / •
AUDIO	Audio Output	30W + 30W (TBD)
	Speaker System	2.2.2 ch
	Sound Mode	• 6 modes (TBD) (Standard, Cinema, Clear Voice III, Sports, Music, Game) • 6 modes (India only) (Standard, Bollywood, Clear Voice III, Sports, Music, Game)
	Clear Voice	• (Clear Voice III) (TBD)
	Dolby Atoms	•
	Adaptive Sound Control	•
	One Touch Sound Tuning	•
	Audio Channel	•
HOSPITALITY SOLUTION	Solution Type	Pro:Centric (Smart, Direct, V)
	Data Streaming (IP & RF)	•
	RF (1/2Tuner)	• (1 Tuner)
	HCAP (GEM/FLASH/HTML) ※ Service Carousel (TLL/XML)	GEM / Flash / HTML5
	Pro:Centric Application (version)	PCA 3.8
	DRM	Pro:Idiom
SMART FEATURE		webOS 4.0, Quick Menu 2.0, Commercial Smart Home, Gallery Mode, Quick Access, Voice Recognition, Web Browser, Pre-loaded App, SDP Server Compatibility, Magic Remote Compatibility (AN-MR18BA_Commercial only), Soft AP, Wi-Fi (ac), Screen Share (Miracast), Smart Share (DLNA), DIAL, Bluetooth Audio Playback, LG Sound Sync/bluetooth, Mobile Connection Overlay, Music Player
FUNCTION		EzManager, USB Cloning, Wake on RF, WOL, SNMP, Diagnostics, SI Compatible, HTNG-CEC (1.4), HDMI-CEC (1.4), IR Out, Multi IR Code, Auto Off / Sleep Timer, Smart Energy Saving, Motion Eye Care, Teletext, BEACON
HOSPITALITY FEATURE		Hotel Mode / PDM / Installer Menu, Lock mode (Limited), Welcome Screen, Insert Image, One Channel Map, External Speaker Out, Instant ON, External Power, VLAN ID, RJP Interface, RJP Compatibility, Clock (World Clock / Alarm), 360 Viewer
JACK INTERFACE	Set Side	-
	Set Rear	RF In, AV In (Phone Jack), Component in (YPb,Pr-Video), Digital Audio Out (Optical), HDMI/HDCP Input 2.0 (2), USB 2.0 (2), RS-232C (Control & Service), Clock Interface (D-sub 15pin), CI Slot, RJ45 (2), External Speaker Out
DIMENSION (UNIT : mm)	VESA	Non (Wallpaper)
	W x H x D / weight (TV only)	(Head) 1,446 x 823 x 3.85 / 6.7kg
	W x H x D / weight (Including AIO box, wall mount)	(Head) 1,446 x 823 x 3.85 (AIO BOX) 1,260 x 78 x 198 / (Head, AIO Box, Wall mount) 6.7kg, 10.0kg, 2.3kg
	W x H x D / weight (packing)	1,641 x 952 x 288 / 32.1kg
POWER (UNIT : Watts)	Voltage, Hz	100 ~ 240V, 50/60Hz
	Max	470
	Typical	275
	Energy Saving (Min/Med/Max)	200 / 143 / 72
	Stand-by	0.5↓

* Specifications are subject to change without notice, so please contact LG salesteam to verify before ordering.

Download LG C-Display+ Mobile App

Google Play Store

www.lg.com/b2b
www.youtube.com/c/LGECommercialDisplay
www.facebook.com/LGInformationDisplay
www.linkedin.com/company/LGInformationDisplay

LG may make changes to specifications and product descriptions without notice.
Copyright © 2018 LG Electronics Inc. All rights reserved. "LG Life's Good" is a registered trademark of LG Corp.
The names of products and brands mentioned here may be the trademarks of their respective owners.

LG Business Solutions