Quick guide

EN

THANK YOU FOR BUYING A HOTPOINT ARISTON PRODUCT.
In order to receive a more complete assistance, please register your product on **www.hotpoint.eu/register**

Before using the appliance carefully read the Safety Instructions.

CONTROL PANEL

1 On/Off button (Reset if long pressed)
2 Programme selection Knob
3 Start/Pausa
Options Buttons*
4 Dryness level
5 Timed Drying
6 Start Delay
7 Gentle
8 Crease Care (if long pressed Key Lock)
9 Cycle End

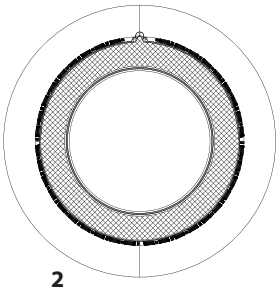

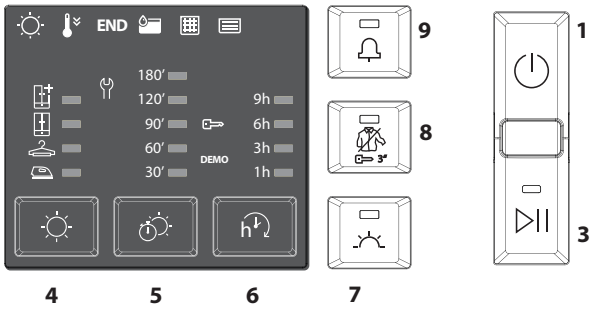

*Note: some models may have the wording in full instead of the icons

INDICATORS

Dryness Level: Iron Dry - Hanger Dry - Cupboard Dry - Extra Dry
Cycle Phase: Drying - Cool Down - **END** End of Cycle
Empty Water tank - Clean Door filter - Clean Bottom filter -
Refer to Troubleshooting Section: **Failure:** Call after Sales Service. DEMO **Demo Mode**

FIRST TIME USE

Make sure that the water tank is correctly inserted. Make sure that the drain hose on the back of the dyrer is properly fixed, either to the dryers's water tank or to the domestic sewage system.
The dryer should be installed in environment in a room temperature range of 20°to 23°C for optimum performance. But will function if the room is between 14 and 30°C. Before you use your dryer ensure that it has been in a upright position for at least 6 hours.
Should you wish to change the opening side of the door, please contact our After-sales Service. (See phone number in the warranty booklet).

DAILY USE

Doing this will keep your machine working at its BEST!

Remember to empty your water tank after each drying cycle. Remember to clean your filters after each drying cycle. (Refer to section Care & Maintanence).

1. Open the door and load garments. Always refer to instructions on clothing labels and the max loads indicated in the programme section. Empty pockets. Make sure garments do not get caught between the door and/or the door filter.
2. Close the door.
3. Press the button On/Off.
4. Select the programme according to the laundry type.
5. Select the options, if necessary.
6. To start the cycle, press the Start/Pause button.
7. At the end of the drying cycle, a buzzer will beep. An indicator on the control panel signals the end of the cycle. Pull the load out immediately to prevent the formation of creases on laundry.
8. Turn the machine off by pressing the button On/Off, open the door and pull clothing out. If the machine is not switched off manually, after about a quarter of an hour from the cycle end, the appliance turns off automatically to save energy.
   If this last stage is not carried out immediately, some machines and/or some programmes/options are equipped with Crease Care system. For some hours, after the end of drying, the drum rotates at regular intervals to prevent the formation of creases.
   In case of power failure, it is necessary to press the button Start/Pause to restart the cycle.

OPENING OF THE DOOR DURING THE CYCLE

During operation, it is possible to open the door. After having closed it, press the button Start/Pause again to restart the dryer.

PROGRAMMES

1.Mixed **kg 4 Time 106'**
This programme is ideal for drying cotton and synthetic fabrics together.

2.Eco cotton **kg Max* Time 215'**
Standard cotton programme, suitable to dry normally wet cotton laundry. Most efficient programme in terms of energy consumption for drying cotton laundry. The values on the Energy Label are based on this programme.

3.Synthetics **kg 4 Time 96'**
This programme is suitable for synthetic garments or cotton blends/synthetic.

4.Wool **kg 1 Time 62'**
Programme for drying wool clothing. It is advisable to turn the garments inside out before drying. Leave to dry naturally the heaviest edges that are still damp.

5.Silk **kg 0,5 Time 66'**
Gentle drying of silk garments.

6.Anti Allergy **kg Max* Time 252'**
This cycle has the "Allergy UK" approval of "The British Allergy Foundation" attesting the effective reduction and elimination of allergens. It can be used both with damp load (drying and treatment) and dry load (half load only).

7.Daily **kg 2 Time 140'**
Ideal for drying garments of cotton blends or synthetics spun at high speed in the washing machine.

8.Cuddly toys **Kg 2,5 Time 220'**
The cycle preserves the original appearance and brilliance of the cuddly toys at best. Remove all accessories before proceeding with drying. Every single piece must not exceed 600 gr.

*MAX LOAD 8 Kg (Dry load)

CARE LABEL

Always check the care labels, especially when placing garments in the tumble dryer for the first time. Below are the most commonly used symbols:

- May be tumble dried.
- Do not tumble dry.
- Tumble dry – high heat.
- Tumble dry – low heat.



The duration of these programs will depend on the size of the load, types of textiles, the spin speed used in your washer and any extra options selected. **In machines equipped with display, the duration of the cycles is shown on the control panel.** The remaining time is constantly checked and adjusted during the drying cycle to show the best possible estimate.

9.Refresh
A short programme suitable for refreshing fibres and garments by means of fresh air. Do not use with garments that are still wet. It can be used on with any load size but is more effective with small loads. The cycle duration is about 20 minutes.

10.Duvet **Time 179'**
Programme intended to dry bulky garments, as single duvet.

11.Bed & Bath **Kg Max* Time 240'**
This programme is intended for drying cotton towels and sheets.

12.Fitness **Kg 4 Time 96"**
For drying sports garments made of synthetics or cotton.

13.Baby **kg 2 Time 107'**
A programme intended to dry garments and linen of new-born babies (cotton and chenille), as well as delicate garments. Do not dry garments having plastic covering.

14.Jeans **kg 3 Time 127'**
For drying cotton jeans-wear and garments made of robust cotton, like denim, such as trousers and jackets.

15.Shirts **kg 3 Time 137'**
This is a programme for Shirts made from cotton or cotton blend/synthetics.

OPTIONS

After selecting the programme, the various options can be set, if necessary

Active care
This function allows to preserve the original appearance and brilliance of your garments at best, by controlling the motor speed, the rotation of the drum, and the temperature.

Dryness Level
Press the related button several times to obtain a different level of residual moisture on garments. An indicator signals the level being selected.

Iron Dry: a very delicate ironing. Suitable for making ironing of garments easier immediately after the end of the cycle.
Hanger Dry: a level intended for delicate garments ready to be hanged.
Cupboard Dry: the garments are ready to be folded and put away.
Extra Dry: used for garments to be worn at the end of the cycle.

Start Delay
This option allows you to set the delay of the cycle start. Press the corresponding button several times to obtain the required delay. After having reached the max. settable time, the option is reset by pressing the button again. An indicator on the control panel signals the time being selected. After having pressed the button Start/Pause, the machine signals the remaining time for the cycle start. In case of door opening, after closing, it is necessary to press the button Start/Pause.

OPTIONS BUTTONS
These buttons serves to personalise the selected programme according to personal requirements.
Not all options are available for all programmes. Some options are incompatible with the ones previously set. The buzzer and/or blinking indicators will signal the incompatibility. If the option is available, the option indicator will stay on. Some options may be kept in the memory of the programme if selected in the previous drying.

Timed drying
This option allows to set the drying time. Press the corresponding button to set the required time for drying. After having reached the max. settable time, a further pressure of the button resets the option. An indicator on the control panel signals the time being selected.

Cycle End
This option activates a prolonged buzzer at the end of the cycle. Enable it if you are not sure to hear the normal sound at the end of the cycle. This option remains in memory if selected in the previous drying.

Gentle
Enables a more gentle treatment of the laundry by reducing the drying temperature.

Key Lock
This option makes all machine controls inaccesible, except the button On/Off. When the machine is on:
- to activate the option, keep the button pressed until the indicator goes on.
- to disable the option, keep the button pressed until the indicator goes off. This option remains in memory if selected in the previous drying.

Crease Care
This option add a crease treatment at the end of the cycle by means of a periodic rotation of the drum (duration up to 10 hours). It is particularly suitable when it is not possible to remove the laundry as soon as the drying ends. If this option is used together with the Start Delay, the crease treatment is added also in the Start Delay phase. This option remains in memory if selected in the previous drying.

CARE AND MANTENANCE

Unplug the dryer during the cleaning and maintenance procedures.

Emptying the water tank after each cycle (see Fig. A).

Pull the container out of the dryer and and empty it into a sink or other suitable drain, then place it back. Do not use the dryer without having inserted the container back in place.

Cleaning the door filter after each cycle (see Fig. B).

Pull the filter out and clean it by removing the lint from the filter surface under running water or using a vacuum cleaner. Do not use the dryer without having reinserted the filter in place.

Remove the door filter as described below:

1. Open the door and pull upwards.
2. Open the filter and

remove lint from all its parts. Replace it correctly.

Ensure it is completely inserted flush with the dryer seal.

Cleaning the bottom filter when the relevant indicator turns on (see Fig. C).

Pull the filter out and remove the lint from its surface by washing it under runing water or by using a vacuum cleaner. **However, it is advisable to clean this filter after each cycle to optimise drying performance.** Do not use the dryer without having inserted the filter in place first.

Remove the bottom filter as described below:

1. Open the lower door.
2. Take the handle and pull the lower filter out.
3. Open the rear side of the filter and remove the lint from the inner surface of the mesh.
4. Clean the bottom filter chamber avoiding the direct contact with the leaves.
5. Close the rear side of the lower filter and place it back by checking it is perfectly integrated in place.
6. Lower the filter handle and close the bottom door.
7. Make sure the air intake is free.

The filters are essential parts for drying. They are intended to collect the lint formed during drying process. In case of clogged filters, the air flow inside the dryer would be seriously affected: the drying times would be longer, the energy consumption would increase and the dryer could be damaged. If these procedures are not carried out properly, the dryer may not start.

TRANSPORT AND HANDLING

Never lift the dryer by holding it at the worktop.

1. Unplug the dryer.
2. Make sure that door and water tank are properly closed.
3. If the drain hose is connected to your sewage system, fix the drain hose on the rear of the dryer again (see Installation Guide).

Power consumption			
off-mode (Po) - Watts			0.50
left-on mode (Pl) - Watts			1.00
Programs	**Kg**	**kWh**	**Minutes**
Eco Cotton *	8	2.53	215
Eco Cotton	4	1.39	127
Synthetics	4	1.18	116

*This is the reference programme for the energy label and suitable to dry normal wet cotton laundry. This is the most efficient programme in terms of energy consumption for drying wet cotton laundry. (Standard/Default starting configuration)

Heat Pump System
The heat pump contains fluorinated greenhouse gases, contained in a hermetically sealed unit. This sealed unit contains 0.15 kg of the F gas R134a. GWP = 1430 (1 t CO2).

PRODUCT DESCRIPTION

1. Water bottle
2. Air Intake
3. Bottom filter
4. Door filter

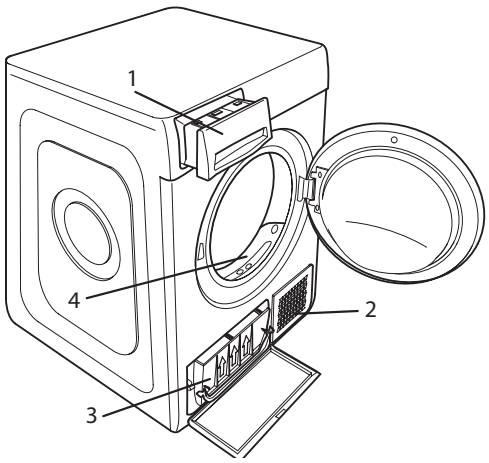

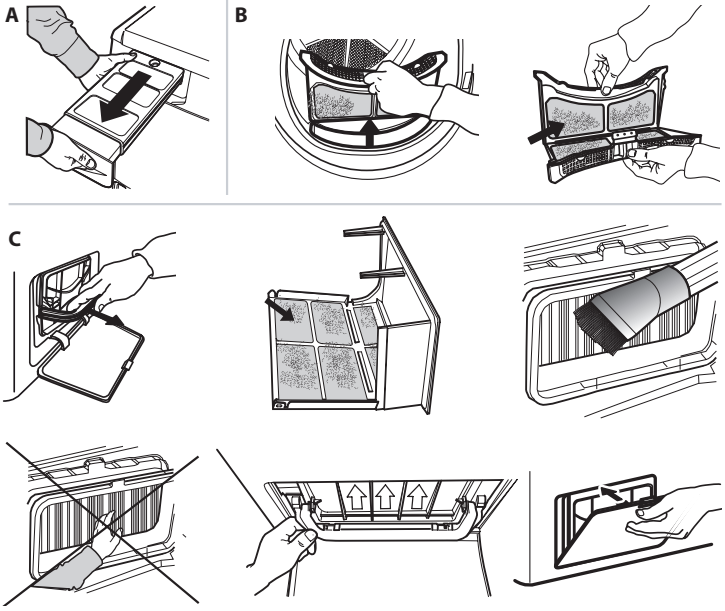

TROUBLESHOOTING

Before contacting the Service Centre, refer to the table below. Often the malfunctions are minor and can be solved in few minutes

Malfunction	Possible cause	Solution
The tumble dryer does not turn on.	The plug is not inserted into the socket.	Insert the plug into the socket.
	The plug is faulty.	Try to plug another appliance in the same socket. Do not use connecting electrical devices to the socket, as adapters or extensions
	A power failure occurred.	Await the reactivation of the power supply.
The tumble dryer does not start	The door is open.	Close the door.
	A time delay for the cycle start was set.	For machines equipped with this function: await the end of the delay set or switch the machine off to reset it. Refer to the section Options.
	The button Start/Pause was not pressed to start the program.	Press the button Start/Pause.
	The function Key Lock was enabled (in case of machines equipped with this option).	Refer to the option section and, if the Key Lock is present, disable it. Switching the machine off is **not** enough to disable this option.
The drying times are very long	An appropriate maintenance was not carried out.	Refer to the section Care & Maintenance and perform the operations described.
	The programme, the time and/or the drying level set are not suitable for the type and the amount of load inserted into the dryer.	Refer to the section programmes and options to find the programme and the options most suitable for the type of load.
	The garments are too wet.	Carry out a washing cycle with higher spin speed to remove as much water as possible.
	The dryer may be overloaded.	Refer to the programme section to check the max. load for each programme.
The programme did not end.	A power failure occurred might have occurred.	In case of power failure, it is necessary to press the button Start/Pause to restart the cycle.
Lights on or flashing		
Water tank	The water tank is full.	Emtpy the water tank. Refer to the section Care & Maintenance.
Door filter and/or bottom filter*	Failure of the air flow necessary for machine operation.	Clean the door filter and the bottom one and check whether air intake is free. Carrying out these operations improperly may cause damages.
Bottom filter*	The bottom filter requires cleaning.	Clean the bottom filter. Refer to section Care & Maintanence.
DEMO The cycle lasts few minutes.	The dryer is in DEMO mode. The DEMO indicator is on.	Disable the DEMO mode. The following actions must be carried out in sequence, without breaks. Switch the machine on and then switch it off again. Press the Start/Pause button until the buzzer is heard. Switch the machine on again. The "DEMO" indicator flashes and then turns off.

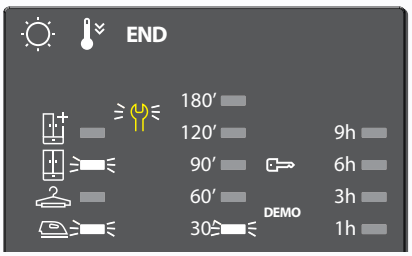

The presence of wrench symbol signals a malfunction. Carry out the operations described. Switch the dryer off and unplug it. Open the door immediately and pull landry out, to allow the heat to dissipate. Wait for about one hour. Reconnect the dryer to the power supply, load the laundry and restart the drying cycle.

If the problem still occurs, contact the After-Sales Service Centre and communicate the number and the position of the flashing LEDs, starting from the bottom and the left column.
e.g.:
First, left column, LEDs No. 1 and 3 on.
Central column, LED No. 1 on.

*Note: some models are self-cleaning and not equipped with bottom filter. Please refer to the section Care & Maintenance.

You can download the Safety Instructions, User Manual, Product Fiche and Energy data by:

- Visiting our website - **docs.hotpoint.eu**
- Using QR Code
- Alternatively, **contact our After-sales Service** (See phone number in the warranty booklet). When contacting our After-sales Service, please state the codes provided on your product's identification plate.

