

CoreLine Recessed

RC134Z CFRM-PLC WH W30L120

Coreline Recessed Acc.

Whether for a new building or renovation of an existing space, customers want lighting solutions that provide quality of light and substantial energy and maintenance savings. The new CoreLine Recessed range of LED products can be used to replace functional luminaires in general lighting applications. The process of selecting, installing and maintaining is so easy – it's a simple switch.In addition, Coreline Recessed also provides the option of advanced connectivity and is ready to be connected to IoT based software applications such as Interact Pro.

Product data

General Information	
Protection class IEC	-
CE mark	CE mark
Material	Steel
Angle	-
Accessory colour	White
Product Family Code	RC134Z [Coreline Recessed Acc.]

Operating and Electrical	
Input voltage	- V
Input frequency	- Hz

Mechanical and Housing	
Overall length	1230 mm
Overall width	330 mm
Overall height	61 mm

Approval and Application	
Ingress protection code	-

Product Data	
Full product code	871869698724700
Order product name	RC134Z CFRM-PLC WH W30L120
EAN/UPC – product	8718696987247
Order code	98724700
Numerator – quantity per pack	1
Numerator – packs per outer box	1
Material no. (12NC)	910925864623
Net weight (piece)	2.100 kg

CoreLine Recessed

Dimensional drawing

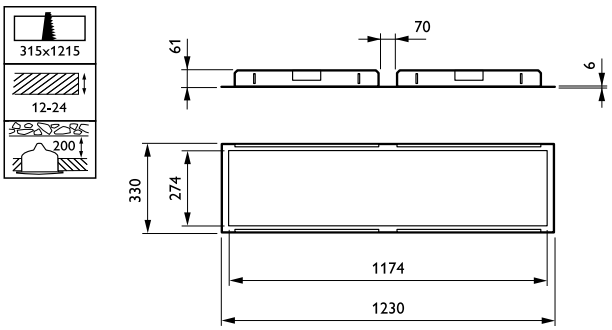

CoreLine Recessed acc. RC134Z/RC135Z

© 2018 Philips Lighting Holding B.V. All rights reserved. Philips Lighting reserves the right to make changes in specifications and/or to discontinue any product at any timewithout notice or obligation and will not be liable for any consequences resulting from the use of this publication.