

Seagate® Nytro® 1351, 1551 SSD

Product Manual

Nytro 1351 - Read Intensive Models	Nytro 1551 - Mixed Workload Models
SED - TCG Enterprise	**SED - TCG Enterprise**
XA240LE10023	XA240ME10023
XA480LE10083	XA480ME10083
XA960LE10083	XA960ME10083
XA1920LE10083	XA1920ME10083
XA3840LE10083	XA3840ME10083
SED - TCG Opal	**SED - TCG Opal**
XA240LE10043	XA240ME10043
XA480LE10103	XA480ME10103
XA960LE10103	XA960ME10103
XA1920LE10103	XA1920ME10103
XA3840LE10103	XA3840ME10103
Standard	**Standard**
XA240LE10003	XA240ME10003
XA480LE10063	XA480ME10063
XA960LE10063	XA960ME10063
XA1920LE10063	XA1920ME10063
XA3840LE10063	XA3840ME10063

100834145, Rev B

November 2018

Revision History

Version and Date	Description of Changes
Rev B, November	Updated: ■ Table 4 Performance - Capacity Optimized (7% OP - Default as Shipped). ■ Table 5 Performance - Performance Optimized (28% OP - Available with Tunable Capacity). ■ Section 2.7, Endurance. ■ Thermal non-operating note in Table 7 Temperature, Humidity, Shock. ■ Non-technical updates.
Rev A, July 2018	First release of the document.

© 2018, Seagate Technology LLC All rights reserved. Publication number: 100834145, Rev B, November 2018

Seagate Technology reserves the right to make changes to the product(s) or information disclosed herein at any time without notice.

Seagate, Seagate Technology and the Spiral logo are registered trademarks of Seagate Technology LLC in the United States and/or other countries. IronWolf and DuraWrite are either trademarks or registered trademarks of Seagate Technology LLC or one of its affiliated companies in the United States and/or other countries. All other trademarks or registered trademarks are the property of their respective owners.

No part of this publication may be reproduced in any form without written permission of Seagate Technology LLC. Call 877-PUB-TEK1(877-782-8351) to request permission.

When referring to drive capacity, one gigabyte, or GB, equals one billion bytes and one terabyte, or TB, equals one trillion bytes. Your computer's operating system may use a different standard of measurement and report a lower capacity. In addition, some of the listed capacity is used for formatting and other functions, and thus will not be available for data storage. Actual quantities will vary based on various factors, including file size, file format, features and application software. Actual data rates may vary depending on operating environment and other factors. The export or re-export of hardware or software containing encryption may be regulated by the U.S. Department of Commerce, Bureau of Industry and Security (for more information, visit www.bis.doc.gov), and controlled for import and use outside of the U.S. Seagate reserves the right to change, without notice, product offerings or specifications.

Contents

Seagate Technology Support Services 5

1. Introduction 6

2. Specifications 9
2.1 Models and Capacity 9
2.2 Performance 10
2.3 Power 12
2.4 Environmental Conditions 13
2.5 Reliability 14
2.6 Tunable Capacity 14
2.7 Endurance 15
2.7.1 Expected DWPD 15
2.7.1.1 Nytro 1351 Workload WA to DWPD Reference - 7% OP 16
2.7.1.2 Nytro 1351 Workload WA to DWPD Reference - 28% OP 16
2.7.1.3 Nytro 1551 Workload WA to DWPD Reference - 7% OP 17
2.7.1.4 Nytro 1551 Workload WA to DWPD Reference - 28% OP 17
2.7.2 Endurance Warranty 18

3. Mechanical Information 19
3.1 Dimensions and Weight 19

4. Pin and Signal Descriptions 20
4.1 Serial ATA Interface Connector 20
4.2 Pin Locations 21
4.3 Connector Pin Signal Definitions 21
4.4 Power Pin Signal Definitions 22
4.5 SSD Activity LED Indicator (Optional) 22

5. Supported ATA Command List 24
5.1 ATA Feature Set 24
5.2 ATA Command Description 25
5.3 Security 26
5.3.1 Password Loss 26

6. SMART Support 27
6.1 SMART Command Set 27
6.2 SMART Attributes 28
6.3 SMART Trip 29

7. Standards and Reference Documents 30
7.1 Regulatory Model Numbers 30
7.2 Agency and Safety Certifications 30
7.2.1 Safety Certification 30
7.2.2 Electromagnetic Compatibility 30
7.2.3 Electromagnetic Susceptibility 30
7.2.4 Electromagnetic Compliance 30
7.2.5 European Union (EU) CE Marking Requirements 31
7.2.6 Australian and New Zealand RCM Compliance Mark 31
7.2.7 Canada ICES-003 31
7.2.8 South Korean Certification Mark 31
7.2.9 Morocco Commodity Mark 31
7.2.10 Taiwanese BSMI 32

7.3 Environmental Protection 32
7.3.1 European Union Restriction of Hazardous Substance Law 32
7.3.2 China Requirements —China RoHS 2 33
7.3.3 Taiwan Requirements — Taiwan RoHS 34

Seagate Technology Support Services

For Product Support, visit: http://www.seagate.com/support/

For information regarding online support and services, visit: http://www.seagate.com/contacts/

Available services include:

- Presales & Technical support
- Global Support Services telephone numbers & business hours
- Authorized Service Centers
- Recovery Services

For information regarding Warranty Support, visit: http://www.seagate.com/support/warranty-and-replacements/

1. Introduction

The Seagate® Nytro® 1351 and Nytro 1551 are next generation enterprise SATA SSDs that deliver enterprise class features in a 2.5-inch × 7 mm form factor.

Table 1 Features

Feature	Description
Capacity	■ 240, 480, 960, 1920, or 3840 GB
Certifications, Eco-Compliance	■ CE, UL, cUL, RCM, BSMI, KCC, TUV, Microsoft WHCK, Microsoft WHQL, SATA-IO ■ RoHS, WEEE
Dimension	■ Width: 69.85±0.25 millimeters ■ Length: 100±0.25 millimeters ■ Height: Maximum 7 millimeters
Endurance	■ Lifetime Endurance: Nytro 1551 3 DWPD Class; Nytro 1351 1 DWPD Class
Logical Block Size	■ 512 bytes
Form Factor	■ 2.5 inch × 7 mm Standard SSD
Interface Compliance	■ Fully compliant with SATA revision 3.2 and 3.3, compatible with SATA 6.0Gb/s and 3.0Gb/s interface rates. ■ Fully compliant with ATA/ATAPI Command Set – 4 and supports all mandatory ATA commands defined in the ATA8-ACS specification. — ATA General Feature Command Set — Power Management Command Set — Security Mode Feature Set — SMART Command Set — Device Statistics — SMART Command Transport — Dataset Management Command Set — Host Protected Area Command Set — 48-bit Address Command Set — General Purpose Log Command Set — Native Command Queuing — Software Settings Prevention — ATA Sanitize Command Set — Identify Device Command Set — Log Addresses Requirement ■ PIO, DMA, UDMA (up to 6, dependent on host) supported. ■ SATA 6.0Gb/s Native Command Queuing (NCQ): up to 32 commands. ■ SMART command transport (SCT) technology. ■ Data Set Management Command Trim support.
NAND	■ TLC
Flash Controller	■ Seagate proprietary Flash Controller ■ Seagate DuraWrite™ Technology for improved performance
Performance	■ See Section 2.1, *Models and Capacity, on page 9*.
Power Consumption	■ See Section 2.3, *Power, on page 12*.

Table 1 Features (Continued)

Feature	Description
Power Loss Data Protection	■ In-process writes to the NAND are completed in the event of an unexpected power loss
Power Management	■ OS-aware hot-plug/hot-swap support
Power On Ready	■ See Section 2.3, *Power, on page 12*.
Reliability	■ Power-loss data protection ■ SMART thermal monitoring ■ MTBF: 2 million hours @ 55°C ■ UBER: 1 read error per 10^{17}bits read ■ End-to-End data-path protection ■ Seagate SHIELD – Advanced ECC for improved reliability with minimal impact on performance — Adaptive Code Rates — Intelligent Noise handling — Adaptive Read Voltage calibration — Multi-Level Error Correction - Best-in-class LDPC implementation ■ Seagate RAISE (Redundant Array of Independent Silicon Elements) — Protects user data from various flash silicon failures — RAID-like data protection and recovery from flash memory failures — Operates within a single drive without impacting performance — Corrects a single page, single block or single die failure within one RAISE stripe on capacities 480GB and higher. For 240GB, corrects a single page, single block or single plane failure within one RAISE stripe.
Security	■ Seagate Secure™ ■ Secure Supply Chain — O-TTPS (Open Trusted Technology Provider Standard) compliant ■ SD&D (Secure Download & Diagnostics) — Cryptographic FW signing, RSA 2048 key — Secure Boot — Locked Diagnostic Port — FW Authenticity and Integrity Verification, SHA 256 ■ Instant Secure EraseTCG Enterprise Protocol, AES-256 Encryption models ■ TCG Opal Protocol, AES-256 Encryption models
Shock	■ Operating: 1000G, duration 0.5ms ■ Non-Operating: 1000G, duration 0.5ms
Vibration	■ Operating: Random, 3.8 Grms, 10-3000Hz, Uniform PSD:0.005 G^2/Hz ■ Non-Operating: Random, 7 Grms, 10-500Hz, Uniform PSD:0.01 G^2/Hz
Voltage	■ 5 V (240GB, 480GB) ■ 5 V and 12 V (960GB, 1920GB, 3840GB)
Data Retention	■ 3 months power-off retention at 40°C once the drive reaches the rated write endurance (EOL)
Temperature Range	■ Operating: 0°C to 70°C ■ Non-operating: -40°C to 85°C
Thermal gradient	■ Operating: 20°C/hour ■ Non-operating: 30°C/hour

Table 1 Features (Continued)

Feature	Description
Tunable Capacity	■ Set to Capacity Optimized or Performance Optimized
Warranty	■ Five years limited Warranty with Media Usage, based on the shorter of term or endurance usage of the drive. See Section 2.7, *Endurance, on page 15*.
Weight	■ up to 77g ±5%

2. Specifications

2.1 Models and Capacity

Table 2 Nytro 1351 - Read Intensive - 1 DWPD Models

Capacity (GB)	LBA Count	SED - TCG Enterprise	SED - TCG Opal	Standard
240	468,862,128	XA240LE10023	XA240LE10043	XA240LE10003
480	937,703,088	XA480LE10083	XA480LE10103	XA480LE10063
960	1,875,385,008	XA960LE10083	XA960LE10103	XA960LE10063
1920	3,750,748,848	XA1920LE10083	XA1920LE10103	XA1920LE10063
3840	7,501,476,528	XA3840LE10083	XA3840LE10103	XA3840LE10063

Table 3 Nytro1551 - Mixed Workload - 3 DWPD Models

Capacity (GB)	LBA Count	SED - TCG Enterprise	SED - TCG Opal	Standard
240	468,862,128	XA240ME10023	XA240ME10043	XA240ME10003
480	937,703,088	XA480ME10083	XA480ME10103	XA480ME10063
960	1,875,385,008	XA960ME10083	XA960ME10103	XA960ME10063
1920	3,750,748,848	XA1920ME10083	XA1920ME10103	XA1920ME10063
3840	7,501,476,528	XA3840ME10083	XA3840ME10103	XA3840ME10063

2.2 Performance

Table 4 Performance - Capacity Optimized (7% OP - Default as Shipped)

Capacity	Units	240 GB		480 GB		960 GB		1920 GB		3840 GB	
Compressibility	**%**	**0%**	**20%**	**0%**	**20%**	**0%**	**20%**	**0%**	**20%**	**0%**	**20%**
128K SR QD32	MB/s	564	564	564	564	564	564	564	564	564	564
128K SW QD32	MB/s	226	325	460	533	535	536	535	536	535	536
4K RR QD32	KIOPs	52	54	77	80	91	92	93	94	87	89
4K R70R QD32	KIOPs	17	32	28	45	39	55	45	61	46	61
4K RW QD32	KIOPs	8	29	15	51	22	59	23	49	22	41
8K RR QD32	KIOPs	38	46	54	57	57	57	57	57	56	57
8K R70R QD32	KIOPs	11	24	15	32	23	39	30	41	30	43
8K RW QD32	KIOPs	4	16	8	32	13	39	14	32	12	27
4K RR Latency QD1	usec	156	154	154	150	153	150	159	159	178	172
4K RW Latency QD1	usec	118	37	66	38	60	39	59	38	59	37
4K RR QD32 99% CI	usec	1800	1800	800	800	600	600	600	600	700	700
4K R70R QD32 99% CI	usec	7300	4700	5000	3700	3900	3000	3700	2800	3400	2600
4K RW QD32 99% CI	usec	6700	3000	3800	1700	3000	800	2900	1900	3000	2000
4K RR QD32 99.99% CI	usec	2000	2000	1800	1500	800	1000	800	900	1800	1800
4K R70R QD32 99.99% CI	usec	14000	8800	9500	7500	7800	6300	7000	5500	6000	5600
4K RW QD32 99.99% CI	usec	8800	5700	5800	3000	4400	2100	3900	2000	3900	2300

NOTE Information on performance:

- 0% refers to data that cannot be compressed and 20% refers to data for which the size can be losslessly compressed by 20%. Performance values shown is based on data compressibility values of 0% and 20% as set with VDBench.
- The scripts that were used to arrive at these measurements are available on request.
- MB is 10^6 bytes. MB/s = 10^6 bytes/sec.
- 4 KB = 4,096 bytes, 8 KB = 8,192 bytes.
- All workloads set to 4 KB alignment.
- All metrics represent sustained values, across full LBA range.
- Drive write cache is active and protected by Power Loss Data Protection (PLDP) feature.
- Performance test precondition: The drive is preconditioned with 2x drive capacity 128 KB sequential write IOs, prior to sequential testing, followed by 6 hours per 1 TB drive capacity of 4K random write IOs, at queue depth 32, prior to random testing.
- Results obtained with a direct SATA port connection to host and may vary with capacity, endurance and system configuration. The HBA used could also affect measured results.

Table 5 Performance - Performance Optimized (28% OP - Available with Tunable Capacity)

Capacity	Units	200 GB		400 GB		800 GB		1600 GB		3200 GB	
Compressibility	**%**	**0%**	**20%**	**0%**	**20%**	**0%**	**20%**	**0%**	**20%**	**0%**	**20%**
128K SR QD32	MB/s	564	564	564	564	564	564	564	564	564	564
128K SW QD32	MB/s	230	330	470	536	536	536	536	536	536	536
4K RR QD32	KIOPs	55	57	81	84	92	93	94	94	89	92
4K R70R QD32	KIOPs	27	35	39	49	49	59	57	69	60	71
4K RW QD32	KIOPs	18	38	33	67	48	70	48	68	45	67
8K RR QD32	KIOPs	44	50	57	57	57	57	57	57	55	57
8K R70R QD32	KIOPs	19	27	28	36	35	42	40	47	41	48
8K RW QD32	KIOPs	10	22	19	42	33	46	33	45	29	43
4K RR Latency QD1	usec	150	145	150	146	142	140	144	140	156	150
4K RW Latency QD1	usec	55	37	42	34	43	35	43	38	46	39
4K RR QD32 99% CI	usec	1700	1500	700	700	600	600	500	500	700	600
4K R70R QD32 99% CI	usec	5300	4200	4000	3400	3500	2900	3100	2500	2800	2000
4K RW QD32 99% CI	usec	4000	2900	3000	1500	1500	700	1100	700	1400	800
4K RR QD32 99.99% CI	usec	2000	2000	1300	1000	900	900	800	800	1300	1000
4K R70R QD32 99.99% CI	usec	9800	8600	8000	7100	6600	5600	6000	5000	5400	5000
4K RW QD32 99.99% CI	usec	6300	5000	6000	3900	3400	3300	2800	1800	2500	2700

NOTE Information on performance:

- 0% refers to data that cannot be compressed and 20% refers to data for which the size can be losslessly compressed by 20%. Performance values shown is based on data compressibility values of 0% and 20% as set with VDBench.
- The scripts that were used to arrive at these measurements are available on request.
- MB is 10^6 bytes. MB/s = 10^6 bytes/sec.
- 4 KB = 4,096 bytes, 8 KB = 8,192 bytes.
- All workloads set to 4 KB alignment.
- All metrics represent sustained values, across full LBA range.
- Drive write cache is active and protected by Power Loss Data Protection (PLDP) feature.
- Performance test precondition: The drive is preconditioned with 2x drive capacity 128 KB sequential write IOs, prior to sequential testing, followed by 6 hours per 1 TB drive capacity of 4K random write IOs, at queue depth 32, prior to random testing.
- Results obtained with a direct SATA port connection to host and may vary with capacity, endurance and system configuration. The HBA used could also affect measured results.

2.3 Power

The drive uses either 5 V or it uses 5 and 12 V DC power.

Table 6 Power

	240 GB	480 GB	960 GB	1920 GB	3840 GB
Power					
Voltage (V)	5	5	5 / 12	5 / 12	5 / 12
Power Consumption					
Overall average active power (W)	2.3	2.7	3.2	3.4	3.5
Maximum average active power (W)	2.6	3.2	4.5	5.1	5.0
Peak (25uS sample) burst active power (W) 5V limited to 6W	4.9	5.4	7.8	8.8	8.6
Idle (W)	1.1	1.1	1.2	1.2	1.2

NOTE 5V power limited to 6 W beyond which power will be drawn from 12 V.

2.4 Environmental Conditions

Table 7 Temperature, Humidity, Shock

Specification	Values
Temperature	■ Operating: 0°C to 70°C ■ Non-operating: -40°C to 85°C
Humidity	■ Operating and Non-Operating: 5% - 95%
Shock	■ Operating: 1000G, duration 0.5ms ■ Non-Operating: 1000G, duration 0.5ms
Thermal gradient	■ Operating: 20°C/hour ■ Non-operating: 30°C/hour

NOTE Operating, as measured by temperature sensor, SMART Attribute ID 194.

- Measured without condensation.
- The non-operating environmental range beyond the operating environmental range is limited to 180 days in original packaging or 60 days otherwise.
- The Shock specification assumes that the SSD is mounted securely with the input vibration applied to the drive mounting. Stimulus may be applied in the X, Y or Z axis.
- Operating Shock: The drive, as installed for normal operation, operates error-free while subjected to intermittent shock not exceeding specification. Shock may be applied in the X, Y, or Z-axis. Shock must not be repeated more than once every 2 seconds.
- Non-Operating Shock: The limits of non-operating shock applies to all conditions of handling and transportation. This includes isolated and integrated drives. Shock may be applied in the X, Y, or Z-axis.

Table 8 Vibration

Specification	Values
Maximum Vibrations	■ Operating: Random, 3.8 Grms, 10-3000Hz, Uniform PSD:0.005 G^2/Hz ■ Non-Operating: Random, 7 Grms, 10-500Hz, Uniform PSD:0.01 G^2/Hz

NOTE The Vibration specification assumes that the SSD is mounted securely with the input Vibration applied to the drive mounting screws. Stimulus may be applied in the X, Y or Z axis.

- Operating Vibration: The drive, as installed for normal operation, shall operate error free while subjected to specified vibration not exceeding specification. Vibration may be applied in the X, Y, or Z-axis.
- Non-Operating Vibration: The limits of non-operating vibration shall apply to all conditions of handling and transportation. This includes both isolated drive and integrated drives. Vibration may be applied in the X, Y, or Z-axis.

2.5 Reliability

Table 9 Reliability

Specification	Values
Mean time between failures (MTBF)	2 million hours @ 55°C
Uncorrectable Bit Error Rate	<1 error in 10^{17} bits read

NOTE The SSD achieves the specified MTBF in an operational environment that complies with the operational temperature range specified in this manual. Operating temperatures are measured by the temperature sensor, SMART Attribute ID, Primary Temperature, provided in Table 20, "SMART Attributes," on page 28.

2.6 Tunable Capacity

You can set the SSD to Capacity Optimized or Performance Optimized states. When shipped, the SSD is in the Capacity Optimized state. Use the Seagate utility, SeaTools™ SSD to set the states. Seagate recommends to set the required state at deployment, prior to installing a file system. Changing states does not change the rated TBW specification for endurance.

2.7 Endurance

2.7.1 Expected DWPD

DuraWrite can enhance endurance depending on the characteristics of the write workload. Realized Host DWPD can be gaged from the table below based on the actual Write Amplification (WA) measurements. To capture the WA value:

1. Read the Lifetime Writes from Host.
2. Read the Lifetime Writes to Flash.
3. Run the application workload of interest for several hours.
4. Read the two SMART attributes again to find both the host writes and flash writes accumulated over the time the workload was running.
5. The WA value is accumulated flash writes divided by host writes.
6. Use this WA value to find an approximate Host DWPD value in the following table.
7. Related workload characteristics are given in the table as a reference.

2.7.1.1 Nytro 1351 Workload WA to DWPD Reference - 7% OP

Table 10 Workload WA to DWPD Reference - 7% OP

User Capacity		240	480	960	1920	3840	Reference Workload
Measured WA	Host DWPD	Host TBW					
0.8	2.2	960	1920	3840	7680	15400	Highly sequential and compressible
1	1.8	768	1540	3070	6140	12300	Highly sequential and somewhat compressible
1.1	1.6	698	1400	2790	5590	11200	Fully sequential and not compressible
1.75	1	439	878	1760	3510	7020	Moderately compressible and predominantly random
2	0.9	384	768	1540	3070	6140	Moderately compressible and highly random
3	0.6	256	512	1020	2050	4100	Slightly compressible and completely random
4	0.4	192	384	768	1540	3070	Highly incompressible and random

2.7.1.2 Nytro 1351 Workload WA to DWPD Reference - 28% OP

Table 11 Workload WA to DWPD Reference - 28% OP

User Capacity		200	400	800	1600	3200	Reference Workload
Measured WA	Host DWPD	Host TBW					
0.8	2.6	960	1920	3840	7680	15400	Highly sequential and compressible
1	2.1	768	1540	3070	6140	12300	Highly sequential and somewhat compressible
1.1	1.9	698	1400	2790	5590	11200	Fully sequential and not compressible
1.35	1.6	569	1140	2280	4550	9100	Moderately compressible and highly random
2	1.1	384	768	1540	3070	6140	Slightly compressible and completely random
3	0.7	256	512	1020	2050	4100	Highly incompressible and random

NOTE Information on endurance:

- DWPD is drive write per day.
- DWPD values based on as shipped, 7%, or 28% capacity points.
- Lifetime Writes to Flash are available from the corresponding SMART attribute, See, Table 20, *SMART Attributes, on page 28*.
- Lifetime Writes from Host are available from the corresponding SMART attribute, see Table 20, *SMART Attributes, on page 28*.
- Write Amplification (WA) is calculated as the cumulative writes to flash divided by the cumulative writes from the host SMART attribute values over the same time interval.

2.7.1.3 Nytro 1551 Workload WA to DWPD Reference - 7% OP

Table 12 Workload WA to DWPD Reference - 7% OP

User Capacity		240	480	960	1920	3840	Reference Workload
Measured WA	Host DWPD	Host TBW					
0.8	5.1	2240	4480	8960	17900	35800	Highly sequential and compressible
1	4.1	1790	3580	7170	14300	28700	Highly sequential and somewhat compressible
1.1	3.7	1630	3260	6520	13000	26100	Fully sequential and not compressible
1.35	3	1330	2650	5310	10600	21200	Moderately compressible and predominantly random
2	2	896	1790	3580	7170	14300	Moderately compressible and highly random
3	1.4	597	1190	2390	4780	9560	Slightly compressible and completely random
4	1	448	896	1790	3580	7170	Highly incompressible and random

2.7.1.4 Nytro 1551 Workload WA to DWPD Reference - 28% OP

Table 13 Workload WA to DWPD Reference - 28% OP

User Capacity		200	400	800	1600	3200	Reference Workload
Measured WA	Host DWPD	Host TBW					
0.8	6.1	2240	4480	8960	17900	35800	Highly sequential and compressible
1	4.9	1790	3580	7170	14300	28700	Highly sequential and somewhat compressible
1.1	4.5	1630	3260	6520	13000	26100	Fully sequential and not compressible
1.35	3.6	1330	2650	5310	10600	21200	Moderately compressible and highly random
2	2.5	896	1790	3580	7170	14300	Slightly compressible and completely random
3	1.6	597	1190	2390	4780	9560	Highly incompressible and random

NOTE Information on endurance:

- DWPD is drive write per day.
- DWPD values based on as shipped, 7%, or 28% capacity points.
- Lifetime Writes to Flash are available from the corresponding SMART attribute, See, Table 20, *SMART Attributes, on page 28*.
- Lifetime Writes from Host are available from the corresponding SMART attribute, see Table 20, *SMART Attributes, on page 28*.
- Write Amplification (WA) is calculated as the cumulative writes to flash divided by the cumulative writes from the host SMART attribute values over the same time interval.

2.7.2 Endurance Warranty

The endurance warranty is based on total writes to the flash media.

Table 14 Total Bytes Written to Flash

As Shipped Capacity	240 GB	480 GB	960 GB	1920 GB	3840 GB
Nytro 1351	768 TB	1540 TB	3070 TB	6140 TB	12300 TB
Nytro 1551	1790 TB	3580 TB	7170 TB	14300 TB	28700 TB

NOTE Information on endurance:

- TB=10^12 bytes
- Limited Warranty with Media Usage provides coverage for the warranty period or the endurance usage of the drive, which ever comes first.
- SSD endurance is based on lifetime writes to the flash media.
- Lifetime Writes to Flash are available from the corresponding SMART attribute, See, Table 20, “SMART Attributes,” on page 28.

3. Mechanical Information

3.1 Dimensions and Weight

Weight: 77 g

Height: Maximum 7 mm

Width: 69.85±0.25

Length: 100±0.25

NOTE All dimensions are in millimeters.

Figure 1 Dimensions

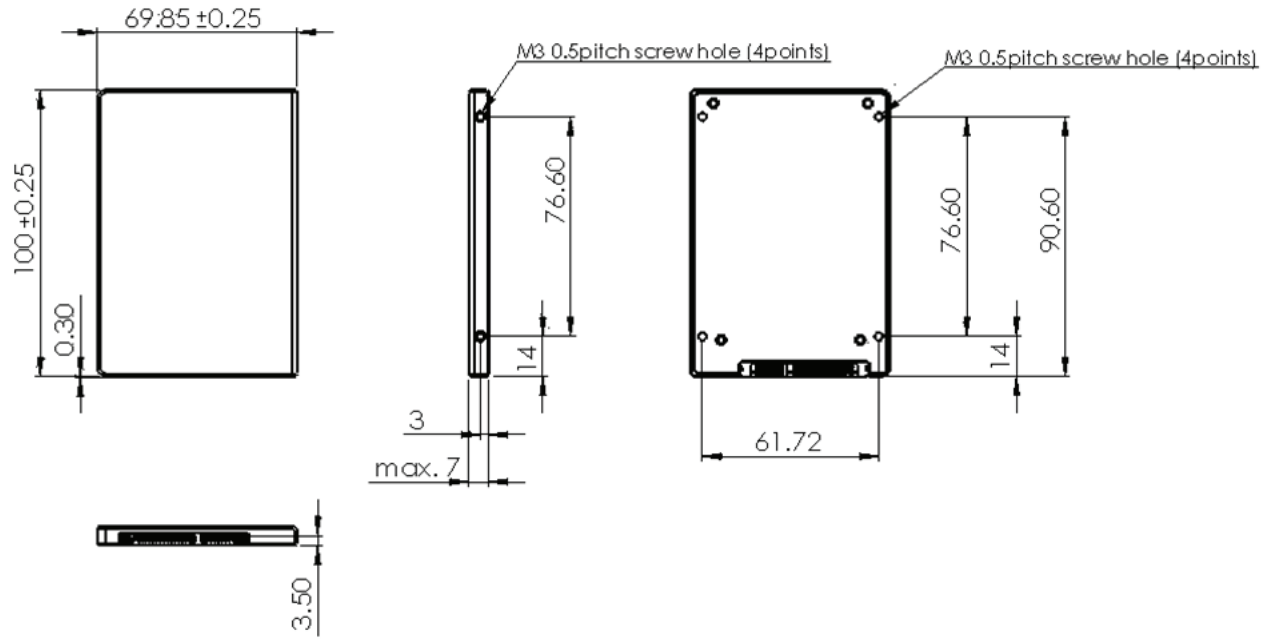

4. Pin and Signal Descriptions

4.1 Serial ATA Interface Connector

Figure 2 Connector Physical Dimension and Connector Assembly

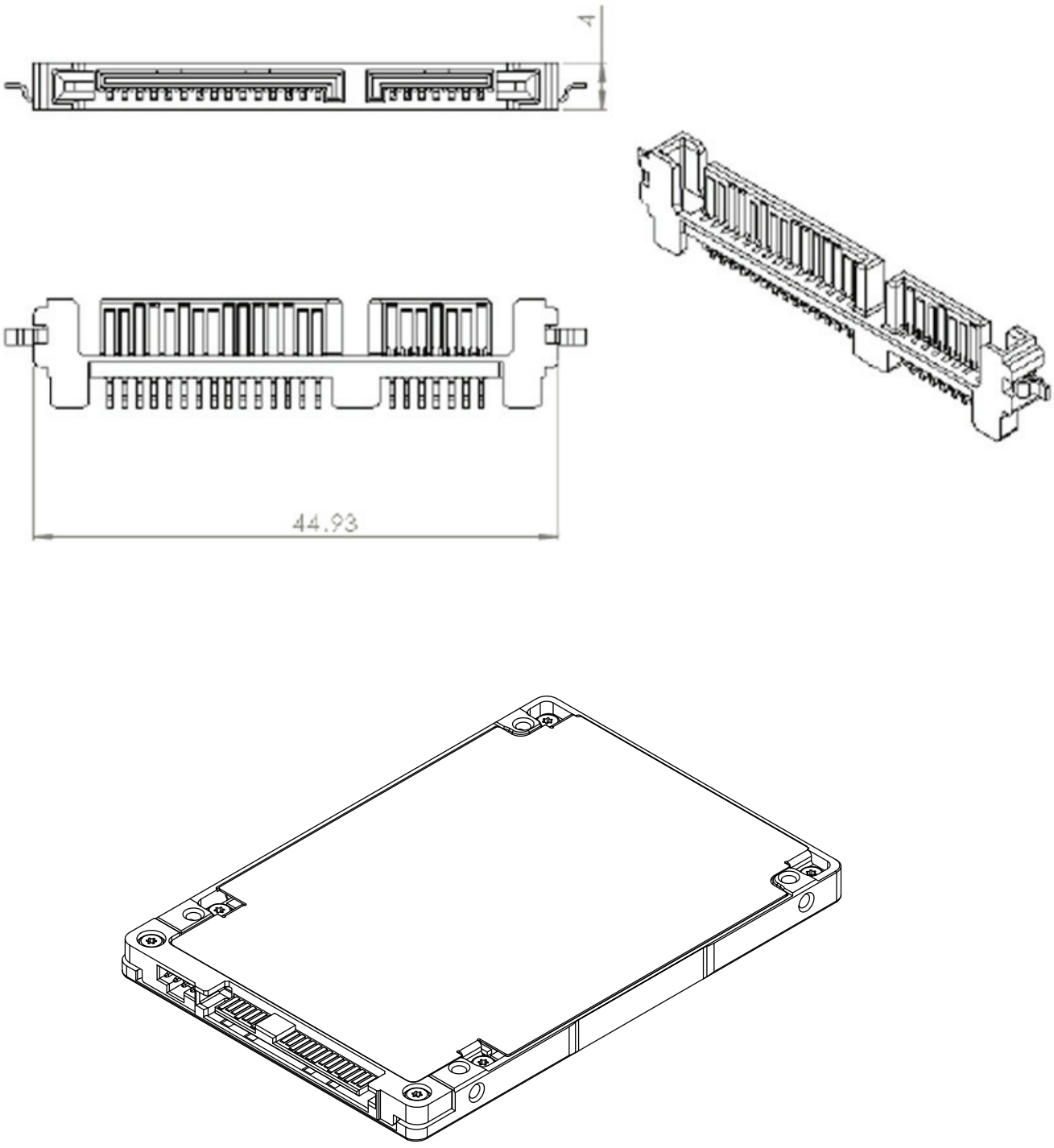

4.2 Pin Locations

Figure 3 Layout of 2.5-inch Signal and Power Segment Pins

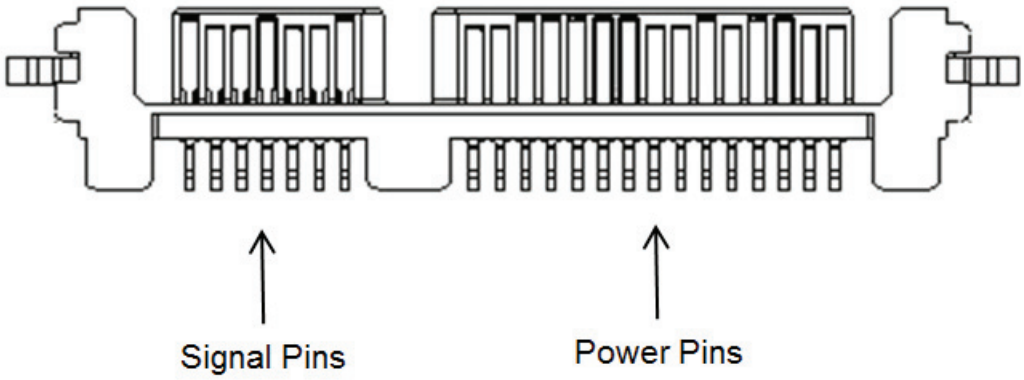

NOTE The 2.5-inch connector supports built in latching capability.

4.3 Connector Pin Signal Definitions

Table 15 Serial ATA Connector Pin Signal Definitions—2.5-inch Form Factors

Pin	Name	Definition
S1	Ground	Ground
S2	A+	Differential signal pair +A and A-
S3	A-	
S4	Ground	Ground
S5	B-	Differential signal pair +B and B-
S6	B+	
S7	Ground	Ground

NOTE Key and spacing separate the signal and power segments.

4.4 Power Pin Signal Definitions

Table 16 Serial ATA Power Pin Signal Definitions—2.5-inch Form Factors

Pin	Function	Definition
P1	V33	3.3 V Power; not used
P2	V33	3.3 V Power; not used
P3	V33	DevSlp; do not connect 3.3 V
P4	GND	Ground
P5	GND	Ground
P6	GND	Ground
P7	V5	5 V Power
P8	V5	5 V Power
P9	V5	5 V Power
P10	GND	Ground
P11	DAS	Device Activity Signal
P12	GND	Ground
P13	V12	12 V Power
P14	V12	12 V Power
P15	V12	12 V Power

NOTE Key and spacing separate the signal and power segments.

- Uses 12 V and 5 V power only. The 240 GB and 480 GB models use 5 V supply only.
- Ground pins are P4, P5, P6, P10, and P12.
- P7, P8, and P9 are 5V power pins and are connected internally on the drive.
- P13, P14, and P15 are 12V power pins and are connected internally on the drive.

4.5 SSD Activity LED Indicator (Optional)

The SSD can support DAS Control function from the SSD module to indicate LED activity of host side.

The device includes a physical pin P11 for connecting device activity LEDs.

The signal provided to indicate activity of the device is a low-voltage and low-current driver. The signal from the device is not suitable for directly driving an LED and is first buffered using a circuit external to the device before driving an LED.

The DAS function firmware feature generates a Low and High toggle Activity signal on pin 11 when the SSD is in a busy state and generates a high Activity signal input when the SSD is in idle mode (Low level: GND, High level: 2.85 V).

The DAS Firmware feature is disabled and the R das is opened when the DAS function is not in use. See Figure 4, *Circuit of SSD Activity LED indication, on page 23*.

Figure 4 Circuit of SSD Activity LED indication

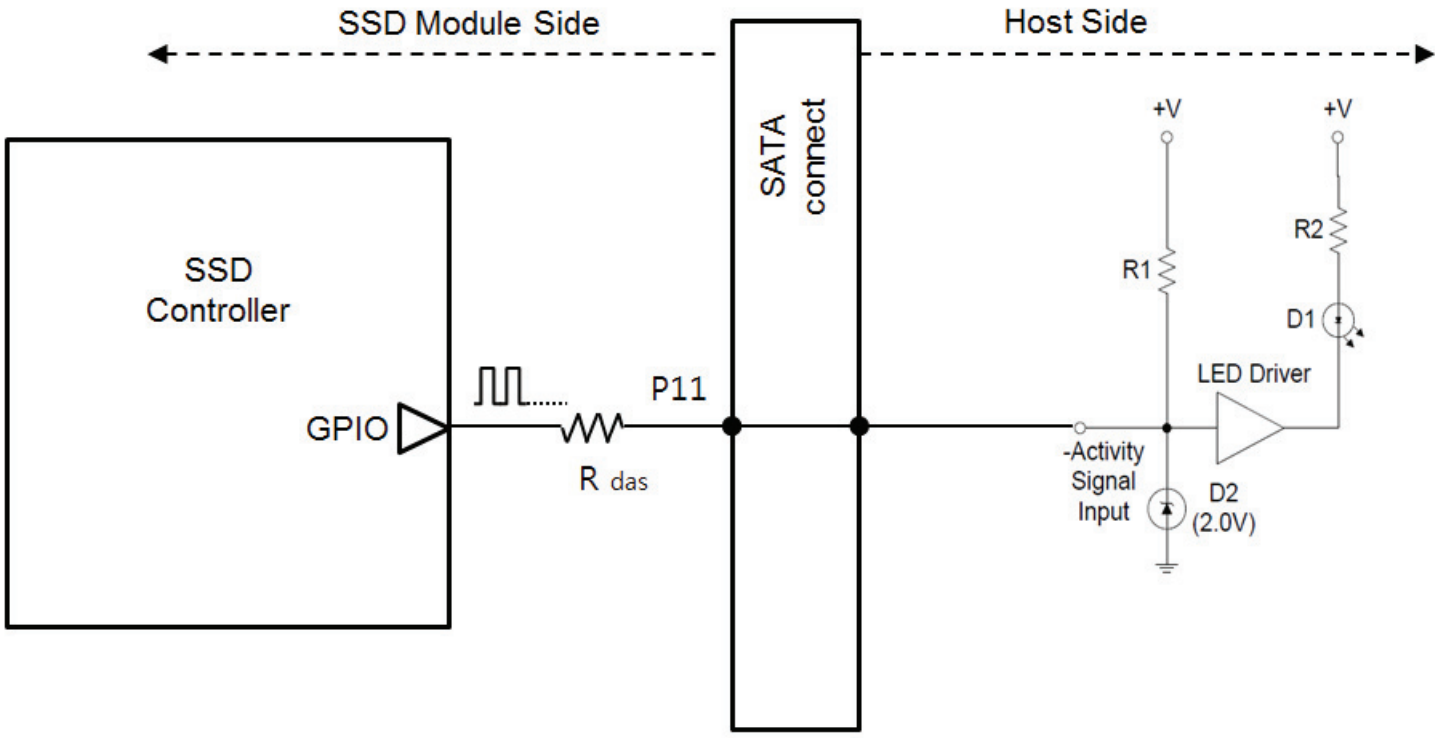

5. Supported ATA Command List

The SSD complies with ATA-8/ACS-4. All mandatory and many optional commands and features are supported.

5.1 ATA Feature Set

The following table shows the ATA feature set and commands that the SSD supports.

Table 17 ATA Feature Set

Feature
Power Management Command Set
Security Mode Feature Set
SMART Command Set
Device Statistics
SMART Command Transport
Dataset Management Command Set
Host Protected Area Command Set
48-bit Address Command Set
General Purpose Log Command Set
Native Command Queuing
Software Settings Prevention
ATA Sanitize Command Set
Identify Device Command Set

5.2 ATA Command Description

The following table shows the ATA commands supported.

Table 18 ATA Command Description

Command	Code (Hex)	Command	Code (Hex)
NOP	00h	EXECUTE DEVICE DIAGNOSTICS	90h
DATA SET MANAGEMENT	06h	DOWNLOAD MICROCODE	92h
REQUEST SENSE DATA EXT	0Bh	DOWNLOAD MICROCODE DMA	93h
READ SECTORS	20h	SMART	B0h
READ SECTORS EXT	24h	SANITIZE DEVICE	B4h
READ DMA EXT	25h	READ MULTIPLE	C4h
READ MULTIPLE EXT	29h	WRITE MULTIPLE	C5h
READ LOG EXT	2Fh	SET MULTIPLE MODE	C6h
WRITE SECTORS	30h	READ DMA	C8h
WRITE SECTORS EXT	34h	WRITE DMA	CAh
WRITE DMA EXT	35h	WRITE MULTIPLE FUA EXT	CEh
WRITE MULTIPLE EXT	39h	STANDBY IMMEDIATE	E0h
WRITE DMA FUA EXT	3Dh	IDLE IMMEDIATE	E1h
WRITE LOG EXT	3Fh	STANDBY	E2h
READ VERIFY SECTORS	40h	IDLE	E3h
READ VERIFY SECTORS EXT	42h	READ BUFFER	E4h
ZERO EXT	44h	CHECK POWER MODE	E5h
WRITE UNCORRECTABLE EXT	45h	SLEEP	E6h
READ LOG DMA EXT	47h	FLUSH CACHE	E7h
WRITE LOG DMA EXT	57h	WRITE BUFFER	E8h
TRUSTED NON-DATA	5Bh	READ BUFFER DMA	E9h
TRUSTED RECEIVE	5Ch	FLUSH CACHE EXT	EAh
TRUSTED RECEIVE DMA	5Dh	WRITE BUFFER DMA	EBh
TRUSTED SEND	5Eh	IDENTIFY DEVICE	ECh
TRUSTED SEND DMA	5Fh	SET FEATURES	EFh
READ FPDMA QUEUED	60h	SECURITY SET PASSWORD	F1h
WRITE FPDMA QUEUED	61h	SECURITY UNLOCK	F2h
NCQ QUEUE MANAGEMENT	63h	SECURITY ERASE PREPARE	F3h
SEND FPDMA QUEUED	64h	SECURITY ERASE UNIT	F4h
RECEIVE FPDMA QUEUED	65h	SECURITY FREEZE LOCK	F5h
SET DATE & TIME EXT	77h	SECURITY DISABLE PASSWORD	F6h
ACCESSIBLE MAX ADDRESS CONFIG	78h		

5.3 Security

The user/master password is supported.

When the device receives a normal SECURITY ERASE UNIT command, the device erases all data blocks including unallocated (hidden) blocks.

You can download firmware regardless of the security state.

Other security features:

- TCG- Enterprise and TCG-Opal support
- Crypto-erase sanitization
- Block-level sanitization
- Secure update of firmware

5.3.1 Password Loss

If you lose the user password, you can access the device using the master password. If both passwords are lost, there is no way to access the device. For TCG Opal SSDs, where the credentials are no longer known, PSID Revert can be used to regain the use of the SSD but all of the data on the drive will be erased.

6. SMART Support

6.1 SMART Command Set

The SSD supports the SMART Command Set shown in the following table.

Table 19 SMART Commands

Feature Field Values	Command
D0h	SMART READ DATA
D1h	SMART READ ATTRIBUTE THRESHOLDS
D2h	SMART ENABLE/DISABLE ATTRIBUTE AUTOSAVE
D3h	SAVE ATTRIBUTE VALUES
D4h	SMART EXECUTE OFF-LINE IMMEDIATE
00h*	Execute SMART Off-Line routine
01h*	Execute SMART Short Self-test routine (Off-Line)
02h*	Execute SMART Extended Self-test routine (Off-Line)
03h*	Execute SMART Conveyance self-test routine in off-line mode
04h*	Execute SMART Selective self-test routine in off-line mode
7Fh*	Abort Off-Line routine
81h*	Execute SMART Short Self-test routine (Captive)
82h*	Execute SMART Extended Self-test routine (Captive)
83h*	Execute SMART Conveyance self-test routine in captive mode
84h*	Execute SMART Selective self-test routine in captive mode
D5h	SMART READ LOG
D6h	SMART WRITE LOG
D8h	SMART ENABLE OPERATIONS
D9h	SMART DISABLE OPERATIONS
DAh	SMART RETURN STATUS
*Low LBA values	

6.2 SMART Attributes

The SSD supports the SMART attributes shown in the following table.

Table 20 SMART Attributes

Name	Default Assignment	Description	Units
Raw Read Error Rate	1	A normalized rate of moderate to severe latency causing correctable errors.	Percentage
Reallocated Sector Count	5	Count of the number of blocks that have been reallocated, excluding pending sectors.	Counter
Power-On-Hours	9	Count of the lifetime power on hours in the Active or Idle ATA state.	Hours
Power Cycle Count	12	Count of the number of complete power up cycles. Excludes power mode state changes with power continuously applied.	Counter
Flash GB Erased	100	Count in GB of the lifetime erases of flash for all purposes.	Count in Giga bytes (2^30)
Lifetime PS4 Entry Count	102	Count of the number of times the PS4 power state is entered.	Counter
Lifetime PS3 Entry Count	103	Count of the number of times the PS3 power state is entered.	Counter
Grown Bad Block Count	170	Count of the number of retired flash blocks post manufacturing.	Counter
Program Fail Count	171	Count of the number of Flash Program failures.	Counter
Erase Fail Count	172	Count of the number of Flash Erase failures.	Counter
Average Program/Erase Count	173	Count of the average number of program/erase cycles on all good blocks.	Counter
Unexpected Power Loss Count	174	Count of the number of complete power loss events not preceded by a shutdown command. Excludes power mode state changes with power continuously applied.	Counter
Wear Range Delta	177	Difference between the most and least worn blocks with regards to the maximum rated P-E cycles (most-least)/max*100.	Percentage
SATA/PCIe Interface Downshift Count	183	Count of the number of times SATA interface rate reduction is negotiated.	Counter
Uncorrectable ECC Count	187	Count of the number of unsuccessful ECC recovery attempts where higher level recovery methods also failed.	Counter
Primary Temperature	194	Current, lifetime maximum and lifetime minimum temperature.	Celsius (Signed data)
RAISE ECC Correctable Count	195	Count of the number of times RAISE successfully recovered data.	Counter
Uncorrectable Read Error Count	198	Count of the number of times an uncorrectable error is returned to the host on a read command.	Counter
SATA R-Error (CRC) Error Count	199	Count of the number of detected SATA R-Errors experienced on the SATA receiver.	Counter
Drive Life Protection Status	230	Power fail protection available.	100d, 64h unprotected SSD RO, 90d, 5Ah protected

Table 20 SMART Attributes

Name	Default Assignment	Description	Units
SSD Life Left	231	Approximate percent SSD life left, in terms of program/erase cycles or Flash blocks currently available for use.	Percentage
Available Reserved Space	232	Ratio of currently available internal reserved space to as built reserved space.	Percentage
Lifetime Writes to Flash	233	Sum in GB of the lifetime writes to flash for all purposes.	Sum in Giga bytes (2^30)
Lifetime Writes from Host	241	Sum in GB of the lifetime writes for all host write commands.	Sum in Giga bytes (2^30)
Lifetime Reads from Host	242	Sum in GB of the lifetime reads for all host read commands.	Sum in Giga bytes (2^30)
Free Space	243	Available user capacity in MB and percent of currently set user capacity.	Percentage User MB Free and percentage user space remaining

6.3 SMART Trip

SMART trip (threshold exceeded condition) indicates impending degradation or fault condition. The host can issue a SMART return status command (B0h/DAh) to communicate the reliability status of the drive. The threshold-exceeded condition is also checked during drive self tests.

7. Standards and Reference Documents

Each Hard Drive and Solid State Drive ("device") has a product label that includes certifications that are applicable to that specific drive. The following information provides an overview of requirements that may be applicable to the drive.

7.1 Regulatory Model Numbers

The following regulatory model number represents all features and configurations within the series:

- STA010

7.2 Agency and Safety Certifications

7.2.1 Safety Certification

These products are certified to meet the requirements of UL/cUL 60950-1, EN 60950-1, and may also include, IEC 62368, UL 62368 and EN 62368.

7.2.2 Electromagnetic Compatibility

The device, as delivered, is designed for system integration and installation into a suitable enclosure prior to use. The drive is supplied as a subassembly and is not subject to Subpart B of Part 15 of the FCC Rules.

The design characteristics of the drive serve to minimize radiation when installed in an enclosure that provides reasonable shielding. The device is capable of meeting the Class B limits of the FCC Rules and Regulations of the Canadian Department of Communications when properly packaged; however, it is the user's responsibility to assure that the device meets the appropriate EMI requirements in their system.

7.2.3 Electromagnetic Susceptibility

The device as delivered is tested to meet susceptibility requirements in a representative enclosure. It is the responsibility of those integrating the drive within their systems to perform those tests required and design their system to ensure that equipment operating in the same system as the drive or external to the system does not adversely affect the performance of the device.

7.2.4 Electromagnetic Compliance

Seagate uses an independent laboratory to confirm compliance with the EMC directives and standards. The device was tested in a representative system for typical applications.Although the test system with this Seagate model complies with the directives/standards, we cannot guarantee that all systems will comply. The computer manufacturer or system integrator shall confirm EMC compliance and provide the appropriate marking for their product.

7.2.5 European Union (EU) CE Marking Requirements

Devices that display the CE mark comply with the European Union (EU) requirements specified in the Electromagnetic Compatibility Directive (2014/30/EU). Testing is performed to the levels specified by the product standards for Information Technology Equipment (ITE). Emission levels are defined by EN 55032:2012, Class B and the immunity levels are defined by EN 55024.

The devices also meet the requirements of The Low Voltage Directive (LVD) 2014/35/EU.

Although CE-marked Seagate devices comply with all relevant regulatory requirements and standards for the drives, Seagate cannot guarantee that all system-level products into which the devices are installed comply with all regulatory requirements and standards applicable to the system-level products. The device is designed for operation inside a properly designed system (e.g., enclosure designed for the device), with properly shielded I/O cable (if necessary) and terminators on all unused I/O ports. Computer manufacturers and system integrators should confirm EMC compliance and provide CE marking for the system-level products.

For compliance with the RoHS "Recast" Directive 2011/65/EU (RoHS 2), see Section 7.3.1 on page 32.

7.2.6 Australian and New Zealand RCM Compliance Mark

If the device has the RCM marking, it complies with the Australia/New Zealand Standard AS/NZ CISPR32 and meets the Electromagnetic Compatibility (EMC) Framework requirements of the Australian Communications and Media Authority (ACMA).

7.2.7 Canada ICES-003

If the device has the ICES-003 Issue 6 marking, it complies with the requirements of ICES tested per ANSI C63.4-2014 or CAN/CSA-CISPR 22-10.

7.2.8 South Korean Certification Mark

If the device has the Korean Communications Commission (KCC) logo, they comply with KN32 and KN35.

기 종 별	사 용 자 안 내 문
B 급 기기 (가정용 방송통신기자재)	이 기기는 가정용(B 급) 전자파적합기기로서 주로 가정에서 사용하는 것을 목적으로 하며, 모든 지역에서 사용할 수 있습니다.

7.2.9 Morocco Commodity Mark

Seagate drives are tested for compliance and comply with the European Union (EU) Electromagnetic Compatibility (EMC) Directive 2014/30/EU and the Low Voltage Directive (LVD) 2014/35/EU. Accordingly, the drives also meet the requirements of Morocco's Order of the Minister of Industry, Trade, Investment and Digital Economy No. 2574-14 of 29 Ramadan 1436 (16 July 2015) on electromagnetic compatibility of equipment.

For devices with the Morocco Mark, Seagate has added the Moroccan Commodity Mark to the devices provided to the OEM for the sale of Customer Kits produced by our OEM customers that are intended to be incorporated into the OEM's finished system-level product by an end user. The Customer Kits are considered 'devices' under Morocco's Order of the Minister of Industry, Trade, Investment and Digital Economy No. 2574-14 of 29 Ramadan 1436 (16 July 2015) on electromagnetic compatibility of equipment.

7.2.10 Taiwanese BSMI

Devices with the Taiwanese certification mark comply with Chinese National Standard, CNS13438 (2006.6) and CNS 15663 (2013.7).

For compliance with the Taiwan Bureau of Standards, Metrology and Inspection's (BSMI) RoHS requirements, see Section 7.3.3 on page 34.

7.3 Environmental Protection

Seagate designs its products to meet environmental protection requirements worldwide, including regulations restricting certain chemical substances.

7.3.1 European Union Restriction of Hazardous Substance Law

7.3.1.1 Restriction of Hazardous Substances in Electrical and Electronic Equipment

Seagate devices are designed to be compliant with the European Union RoHS "Recast" Directive 2011/65/EU (RoHS 2) as amended by Directive (EU) 2015/863. The RoHS2 restricts the use of certain hazardous substances such as Lead, Cadmium, Mercury, Hexavalent Chromium, Polybrominated Biphenyls (PBB) and Polybrominated Diphenyl Ether (PBDE), BisBis(2-Ethylhexyl) phthalate (DEHP), Benzyl butyl phthalate (BBP), Dibutyl phthalate (DBP), and Diisobutyl phthalate (DIBP) in electrical and electronic equipment (EEE).

7.3.1.2 Substances of Very High Concern (SVHC)

The European Union REACH (Registration, Evaluation, Authorization and Restriction of Chemicals) Regulation (EC) 1907/2006 regulates chemicals shipped into and used in Europe. A number of parts and materials in Seagate products are procured from external suppliers. We rely on the representations of our suppliers regarding the presence of REACH substances in these articles and materials. Our supplier contracts require compliance with our chemical substance restrictions, and our suppliers document their compliance with our requirements by providing full-disclosure material content declarations that disclose inclusion of any REACH-regulated substance in such articles or materials. Product-specific REACH declarations are available upon request through your Seagate Sales Representative.

7.3.2 China Requirements —China RoHS 2



China RoHS 2 refers to the Ministry of Industry and Information Technology Order No. 32, effective July 1, 2016, titled Management Methods for the Restriction of the Use of Hazardous Substances in Electrical and Electronic Products. To comply with China RoHS 2, Seagate determined this product's Environmental Protection Use Period (EPUP) to be 20 years in accordance with the *Marking for the Restricted Use of Hazardous Substances in Electronic and Electrical Products,* SJT 11364-2014.

Table 21 China - Hazardous Substances

部件名称 Part Name	有害物质 Hazardous Substances					
	铅 (Pb)	汞 (Hg)	镉 (Cd)	六价铬 (Cr^{+6})	多溴联苯 (PBB)	多溴二苯醚 (PBDE)
印刷电路板组装 PCBA	X	O	O	O	O	O
机壳 Chassis	X	O	O	O	O	O

本表格依据 SJ/T 11364 的规定编制。

This table is prepared in accordance with the provisions of SJ/T 11364-2014

O：表示该有害物质在该部件所有均质材料中的含量均在 GB/T 26572 规定的限量要求以下。

O：Indicates that the hazardous substance contained in all of the homogeneous materials for this part is below the limit requirement of GB/T26572.

X：表示该有害物质至少在该部件的某一均质材料中的含量超出 GB/T 26572 规定的限量要求。

X：Indicates that the hazardous substance contained in at least one of the homogeneous materials used for this part is above the limit requirement of GB/T26572.

7.3.3 Taiwan Requirements — Taiwan RoHS

Taiwan RoHS refers to the Taiwan Bureau of Standards, Metrology and Inspection's (BSMI) requirements in standard CNS 15663, Guidance to reduction of the restricted chemical substances in electrical and electronic equipment. Seagate products must comply with the "Marking of presence" requirements in Section 5 of CNS 15663, effective January 1, 2018. This product is Taiwan RoHS compliant.

The following table meets the Section 5 "Marking of presence" requirements.

Table 22 Taiwan - Restricted Substances

設備名稱：固態硬碟， Equipment Name: 2.5 inch SSDs				型號（型式） Type Designation (Type)		
單元 Unit	限用物質及其化學符號 Restricted Substance and its chemical symbol					
	鉛 Lead (Pb)	汞 Mercury (Hg)	鎘 Cadmium (Cd)	六價鉻 Hexavalent Chromium (Cr^{+6})	多溴聯苯 Polybrominated biphenyls (PBB)	多溴二苯醚 Polybrominated diphenyl ethers (PBDE)
快閃記憶體 Flash Memory	O	O	O	O	O	O
連接器 Connector	O	O	O	O	O	O
外殼 Product Cover	O	O	O	O	O	O
印刷電路板總成 PCB Assembly	—	O	O	O	O	O

備考1.〝超出0.1 wt %〞及〝超出0.01 wt %〞係指限用物質之百分比含量超出百分比含量基準值。

Note 1: "Exceeding 0.1 wt %" and "exceeding 0.01 wt %" indicate that the percentage content of the restricted substance exceeds the reference percentage value of presence condition.

備考2.〝O〞係指該項限用物質之百分比含量未超出百分比含量基準值。

Note 2. "O" indicates that the percentage content of the restricted substance does not exceed the percentage of reference value of presence.

備考3.〝－〞係指該項限用物質為排除項目。

Note 3. "—" indicates that the restricted substance corresponds to the exemption.



Seagate Technology LLC
AMERICAS Seagate Technology LLC 10200 South De Anza Boulevard, Cupertino, California 95014, United States, 408-658-1000
ASIA/PACIFIC Seagate Singapore International Headquarters Pte. Ltd. 7000 Ang Mo Kio Avenue 5, Singapore 569877, 65-6485-3888
EUROPE, MIDDLE EAST, AND AFRICA Seagate Technology SAS 16-18 rue du Dôme, 92100 Boulogne-Billancourt, France, 33 1-4186 10 00
Publication Number: 100834145, Rev. B
November 2018