AKZM 756/IX

12NC: 852575638000

GTIN (EAN) code: 8003437818592

SENSING THE DIFFERENCE



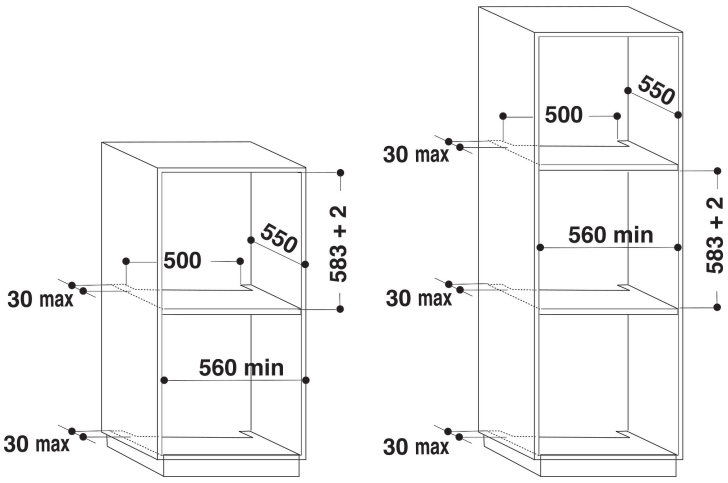

Whirlpool built in electric oven: inox color - AKZM 756/IX

This Whirlpool built in Oven features: advanced electric technology allowing you to cook dishes saving energy. Halogen lamp allowing a more energy-efficient performance.

LCD graphic assisted display
An intuitive LCD graphic display to assist you during cooking. It includes 9 special functions to help streamline your recipes.

Multifunction 5
Multiple cooking methods. The Multifunction 5 feature offers flexible cooking options, to ensure perfect results, whatever the recipe.

Push push
The knobs' 'push push' design ensure extra comfortable ease of use and a premium look.

XXL cavity
All the space you need. The XXL cavity in your oven has a capacity of 75 litres with 5 different shelf positions available.

Energy class
Outstanding energy savings. Ovens with an A/ A+ energy rating offer an excellent level of energy efficiency, ensuring lower consumption and saving you money on your energy bills.

Energy class A
Energy efficient. With its A energy rating, this Whirlpool appliance will allow you to enjoy both ideal performance and excellent energy consumption.

- Energy class A
- Cavity 73 L
- Defrost function
- Grill
- Easy Clean Enamel Interior
- Turbo grill function
- Maxi cooking
- Pastry function
- Special functions
- Fast Pre-Heating
- Tilting Grill for easy cleaning
- Conventional Cooking
- "Push Push" knobs
- Door Glasses Number: 3
- Protuding handle
- Child Lock
- Timer

AKZM 756/IX

12NC: 852575638000

GTIN (EAN) code: 8003437818592

Whirlpool
SENSING THE DIFFERENCE

MAIN FEATURES

Product group	Oven
Commercial code	AKZM 756/IX
Main colour of product	Inox
Construction type	Built-in
Type of control	Mechanical and electronic
Type of control settings	-
Are any hobs controls integrated?	No
Which kind of hobs can be controlled?	-
Automatic programmes	Yes
Current (A)	13
Voltage (V)	220-240
Frequency (Hz)	50/60
Length of Electrical Supply Cord (cm)	90
Plug type	No
Depth with open door 90 degree (mm)	-
Height of the product	595
Width of the product	595
Depth of the product	564
Minimum niche height	0
Minimum niche width	0
Niche depth	0
Net weight (kg)	35.5
Usable volume (of cavity)	73
Integrated Cleaning system	No
Grids of the cavity	2
Trays	1

TECHNICAL FEATURES

Timer	-
Time control	Electronic
Time-setting options	-
Safety device	-
Interior light	Yes
Number of interior lights of the cavity	1
Position of interior lights of the cavity	Rear
Oven guides of the cavity	Grids
Probe of the cavity	No

PERFORMANCES

Energy input	Electric
Type of energy of the cavity	Electricity
Energy efficiency class - NEW (2010/30/EU)	A
Energy consumption per cycle conventional - NEW (2010/30/EU)	0.91
Energy consumption per cycle forced air convection - NEW (2010/30/EU)	0.82

