BPK537221M

EN **User Manual**
Oven

USER MANUAL

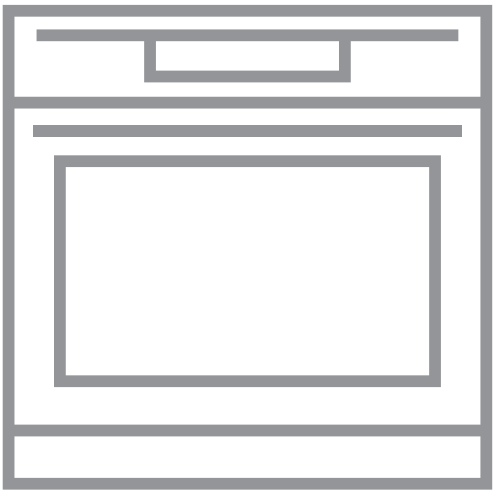

AEG

CONTENTS

1. SAFETY INFORMATION....3
2. SAFETY INSTRUCTIONS....4
3. INSTALLATION....8
4. PRODUCT DESCRIPTION....9
5. CONTROL PANEL....9
6. BEFORE FIRST USE....10
7. DAILY USE....10
8. CLOCK FUNCTIONS....12
9. USING THE ACCESSORIES....13
10. ADDITIONAL FUNCTIONS....14
11. HINTS AND TIPS....15
12. CARE AND CLEANING....26
13. TROUBLESHOOTING....29
14. ENERGY EFFICIENCY....32
15. SAUDI ARABIA - CUSTOMER SERVICE....32

FOR PERFECT RESULTS

Thank you for choosing this AEG product. We have created it to give you impeccable performance for many years, with innovative technologies that help make life simpler features you might not find on ordinary appliances. Please spend a few minutes reading to get the very best from it.
Visit our website for:



Get usage advice, brochures, trouble shooter, service information:
www.aeg.com/webselfservice



Register your product for better service:
www.registeraeg.com



Buy Accessories, Consumables and Original spare parts for your appliance:
www.aeg.com/shop

CUSTOMER CARE AND SERVICE

Always use original spare parts.
When contacting our Authorised Service Centre, ensure that you have the following data available: Model, PNC, Serial Number.
The information can be found on the rating plate.

⚠ Warning / Caution-Safety information

ⓘ General information and tips

Environmental information

Subject to change without notice.

1. ⚠ SAFETY INFORMATION

Before the installation and use of the appliance, carefully read the supplied instructions. The manufacturer is not responsible for any injuries or damage that are the result of incorrect installation or usage. Always keep the instructions in a safe and accessible location for future reference.

1.1 Children and vulnerable people safety

- This appliance can be used by children aged from 8 years and above and persons with reduced physical, sensory or mental capabilities or lack of experience and knowledge if they have been given supervision or instruction concerning the use of the appliance in a safe way and understand the hazards involved.
- Children between 3 and 8 years of age and persons with very extensive and complex disabilities shall be kept away from the appliance unless continuously supervised.
- Children of less than 3 years of age should be kept away from the appliance unless continuously supervised.
- Do not let children play with the appliance.
- Keep all packaging away from children and dispose of it appropriately.
- Keep children and pets away from the appliance when it operates or when it cools down. Accessible parts may become hot during use.
- If the appliance has a child safety device, it should be activated.
- Children shall not carry out cleaning and user maintenance of the appliance without supervision.

1.2 General Safety

- Only a qualified person must install this appliance and replace the cable.

- WARNING: The appliance and its accessible parts become hot during use. Care should be taken to avoid touching heating elements.
- Always use oven gloves to remove or put in accessories or ovenware.
- Before carrying out any maintenance, disconnect the appliance from the power supply.
- WARNING: Ensure that the appliance is switched off before replacing the lamp to avoid the possibility of electric shock.
- Do not use the appliance before installing it in the built-in structure.
- Do not use a steam cleaner to clean the appliance.
- Do not use harsh abrasive cleaners or sharp metal scrapers to clean the glass door since they can scratch the surface, which may result in shattering of the glass.
- If the mains power supply cable is damaged, it must be replaced by the manufacturer, its Authorised Service Centre or similarly qualified persons to avoid an electrical hazard.
- Excessive spillage must be removed before the pyrolytic cleaning. Remove all parts from the oven.
- To remove the shelf supports first pull the front of the shelf support and then the rear end away from the side walls. Install the shelf supports in the opposite sequence.

2. SAFETY INSTRUCTIONS

2.1 Installation

WARNING!
Only a qualified person must install this appliance.

- Remove all the packaging.
- Do not install or use a damaged appliance.
- Follow the installation instructions supplied with the appliance.
- Always take care when moving the appliance as it is heavy. Always use safety gloves and enclosed footwear.
- Do not pull the appliance by the handle.
- Keep the minimum distance from other appliances and units.
- Install the appliance in a safe and suitable place that meets installation requirements.
- The appliance is equipped with an electric cooling system. It must be operated with the electric power supply.

Cabinet minimum height (Cabinet under the worktop minimum height)	590 (600) mm
Cabinet width	560 mm
Cabinet depth	550 (550) mm
Height of the front of the appliance	594 mm
Height of the back of the appliance	576 mm
Width of the front of the appliance	595 mm
Width of the back of the appliance	559 mm
Depth of the appliance	569 mm
Built in depth of the appliance	548 mm
Depth with open door	1022 mm
Ventilation opening minimum size. Opening placed on the bottom rear side	560x20 mm
Mains supply cable length. Cable is placed in the right corner of the back side	1500 mm
Mounting screws	4x25 mm

2.2 Electrical connection

WARNING!
Risk of fire and electric shock.

- All electrical connections should be made by a qualified electrician.
- The appliance must be earthed.
- Make sure that the parameters on the rating plate are compatible with the electrical ratings of the mains power supply.
- Always use a correctly installed shockproof socket.
- Do not use multi-plug adapters and extension cables.
- Make sure not to cause damage to the mains plug and to the mains cable. Should the mains cable need to be replaced, this must be carried out by our Authorised Service Centre.
- Do not let mains cables touch or come near the appliance door or the niche below the appliance, especially when it operates or the door is hot.
- The shock protection of live and insulated parts must be fastened in such a way that it cannot be removed without tools.
- Connect the mains plug to the mains socket only at the end of the installation. Make sure that there is access to the mains plug after the installation.
- If the mains socket is loose, do not connect the mains plug.
- Do not pull the mains cable to disconnect the appliance. Always pull the mains plug.
- Use only correct isolation devices: line protecting cut-outs, fuses (screw type fuses removed from the holder), earth leakage trips and contactors.
- The electrical installation must have an isolation device which lets you disconnect the appliance from the mains at all poles. The isolation device must have a contact opening width of minimum 3 mm.
- Fully close the appliance door before you connect the mains plug to the mains socket.
- This appliance is supplied only with a main cable.

Cable types applicable for installation or replacement for Europe:
H07 RN-F, H05 RN-F, H05 RRF, H05 VV-F, H05 V2V2-F (T90), H05 BB-F

For the section of the cable refer to the total power on the rating plate. You can also refer to the table:

Total power (W)	Section of the cable (mm²)
maximum 1380	3 x 0.75
maximum 2300	3 x 1
maximum 3680	3 x 1.5

The earth cord (green / yellow cable) must be 2 cm longer than phase and neutral cables (blue and brown cables).

2.3 Use

WARNING!
Risk of injury, burns and electric shock or explosion.

- This appliance is for household use only.
- Do not change the specification of this appliance.
- Make sure that the ventilation openings are not blocked.
- Do not let the appliance stay unattended during operation.
- Deactivate the appliance after each use.
- Be careful when you open the appliance door while the appliance is in operation. Hot air can release.
- Do not operate the appliance with wet hands or when it has contact with water.
- Do not apply pressure on the open door.
- Do not use the appliance as a work surface or as a storage surface.
- Open the appliance door carefully. The use of ingredients with alcohol can cause a mixture of alcohol and air.
- Do not let sparks or open flames to come in contact with the appliance when you open the door.
- Do not put flammable products or items that are wet with flammable products in, near or on the appliance.

WARNING!
Risk of damage to the appliance.

- To prevent damage or discoloration to the enamel:
  - do not put ovenware or other objects in the appliance directly on the bottom.
  - do not put aluminium foil directly on the bottom of cavity of the appliance.
  - do not put water directly into the hot appliance.
  - do not keep moist dishes and food in the appliance after you finish the cooking.
  - be careful when you remove or install the accessories.
- Discoloration of the enamel or stainless steel has no effect on the performance of the appliance.
- Use a deep pan for moist cakes. Fruit juices cause stains that can be permanent.
- This appliance is for cooking purposes only. It must not be used for other purposes, for example room heating.
- Always cook with the oven door closed.
- If the appliance is installed behind a furniture panel (e.g. a door) make sure the door is never closed when the appliance is in operation. Heat and moisture can build up behind a closed furniture panel and cause subsequent damage to the appliance, the housing unit or the floor. Do not close the furniture panel until the appliance has cooled down completely after use.

2.4 Care and cleaning

WARNING!
Risk of injury, fire, or damage to the appliance.

- Before maintenance, deactivate the appliance and disconnect the mains plug from the mains socket.
- Make sure the appliance is cold. There is the risk that the glass panels can break.
- Replace immediately the door glass panels when they are damaged. Contact the Authorised Service Centre.
- Clean regularly the appliance to prevent the deterioration of the surface material.

- Clean the appliance with a moist soft cloth. Only use neutral detergents. Do not use any abrasive products, abrasive cleaning pads, solvents or metal objects.
- If you use an oven spray, follow the safety instruction on it's packaging.
- Do not clean the catalytic enamel (if applicable) with any kind of detergent.

2.5 Pyrolytic cleaning



WARNING!
Risk of Injury / Fires / Chemical Emissions (Fumes) in Pyrolytic Mode.

- Before carrying out a Pyrolitic self-cleaning function or the First Use please remove from the oven cavity:
  - any excess food residues, oil or grease spills / deposits.
  - any removable objects (including shelves, side rails etc., provided with the product) particularly any non-stick pots, pans, trays, utensils etc.
- Read carefully all the instructions for Pyrolytic cleaning.
- Keep children away from the appliance while the Pyrolytic cleaning operates.
  The appliance becomes very hot and hot air is released from the front cooling vents.
- Pyrolytic cleaning is a high temperature operation that can release fumes from cooking residues and construction materials, as such consumers are strongly advised to:
  - provide good ventilation during and after each Pyrolytic cleaning.
  - provide good ventilation during and after the first use at maximum temperature operation.
- Unlike all humans, some birds and reptiles can be extremely sensitive to potential fumes emitted during the cleaning process of all Pyrolytic Ovens.
  - Remove any pets (especially birds) from the vicinity of the appliance location during and after the Pyrolytic cleaning and first use maximum temperature operation to a well ventilated area.
- Small pets can also be highly sensitive to the localized temperature changes in the vicinity of all Pyrolytic Ovens when the Pyrolytic self cleaning program is in operation.
- Non-stick surfaces on pots, pans, trays, utensils etc., can be damaged by the high temperature Pyrolytic cleaning operation of all Pyrolytic Ovens and can be also a source for low level harmful fumes.
- Fumes released from all Pyrolytic Ovens / Cooking Residues as described are not harmful to humans, including children, or persons with medical conditions.

2.6 Internal lighting



WARNING!
Risk of electric shock.

- The type of light bulb or halogen lamp used for this appliance is for household appliances only. Do not use it for house lighting.
- Before replacing the lamp, disconnect the appliance from the power supply.
- Only use lamps with the same specifications.

2.7 Service

- To repair the appliance contact the Authorised Service Centre.
- Use original spare parts only.

2.8 Disposal



WARNING!
Risk of injury or suffocation.

- Disconnect the appliance from the mains supply.
- Cut off the mains electrical cable close to the appliance and dispose of it.
- Remove the door catch to prevent children or pets from becoming trapped in the appliance.

3. INSTALLATION

WARNING!
Refer to Safety chapters.

3.1 Building In

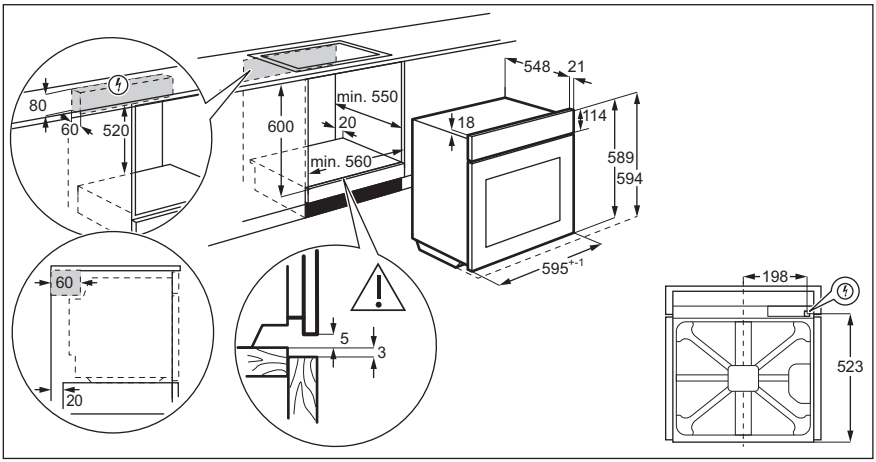

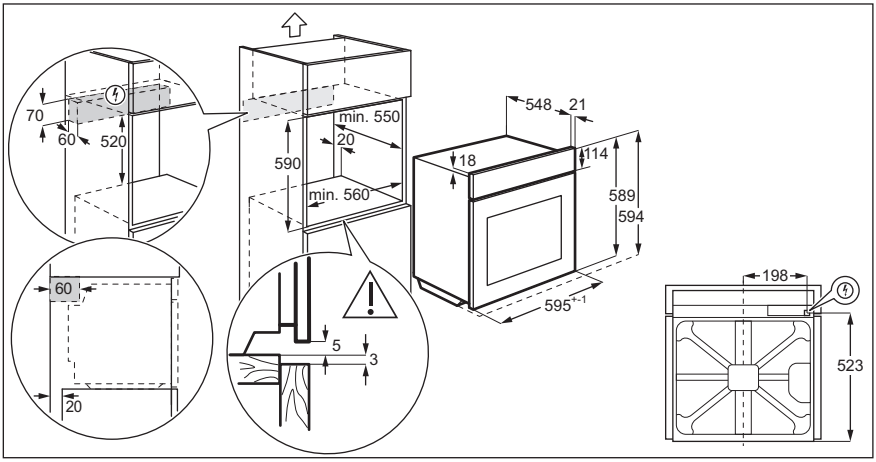

3.2 Securing the oven to the cabinet

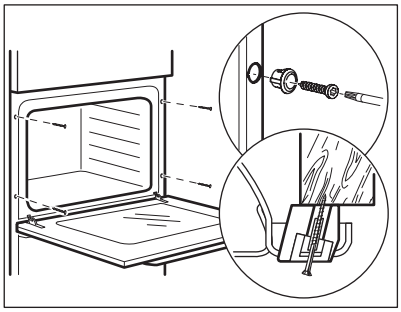

4. PRODUCT DESCRIPTION

4.1 General overview

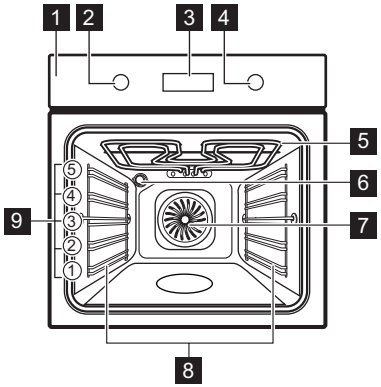

1 Control panel
2 Knob for the heating functions
3 Display
4 Control knob (for the temperature)
5 Heating element
6 Lamp
7 Fan
8 Shelf support, removable
9 Shelf positions

4.2 Accessories

- **Wire shelf**
  For cookware, cake tins, roasts.
- **Baking tray**
  For cakes and biscuits.
- **Grill- / Roasting pan**
  To bake and roast or as pan to collect fat.

5. CONTROL PANEL

5.1 Buttons

Sensor field / Button	Function	Description
3sec	MINUTE MINDER	To set the MINUTE MINDER. Hold it for more than 3 seconds to turn on or turn off the oven lamp.

Sensor field / Button	Function	Description
	CLOCK	To set a clock function.
°C	TEMPERATURE	To check the oven temperature or the temperature of the core temperature sensor (if applicable). Use only while a heating function operates.

5.2 Display

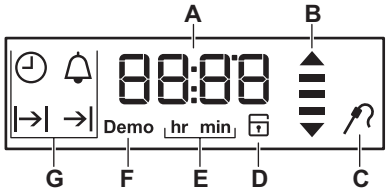

A. Timer / Temperature
B. Heat-up and residual heat indicator
C. Core temperature sensor (selected models only)
D. Door lock (selected models only)
E. Hours / minutes
F. Demo mode (selected models only)
G. Clock functions

6. BEFORE FIRST USE

WARNING!
Refer to Safety chapters.

To set the Time of day refer to "Clock functions" chapter.

6.1 Initial Cleaning

Remove all accessories and removable shelf supports from the oven.

Refer to "Care and cleaning" chapter.

Clean the oven and the accessories before the first use.
Put the accessories and the removable shelf supports back to their initial position.

6.2 Preheating

Preheat the empty oven before first use.

1. Set the function . Set the maximum temperature.
2. Let the oven operate for 1 hour.
3. Set the function . Set the maximum temperature.
4. Let the oven operate for 15 minutes.
5. Turn off the oven and let it cool down.

Accessories can become hotter than usual. The oven can emit an odour and smoke. Make sure that the airflow in the room is sufficient.

7. DAILY USE

WARNING!
Refer to Safety chapters.

7.1 Retractable knobs

To use the appliance press the knob. The knob comes out.

7.2 Heating functions

Oven function	Application
0 Off position	The oven is off.

Oven function	Application
 Fast Heat Up	To decrease the heat-up time.
 True Fan Cooking	To bake on up to three shelf positions at the same time and to dry food. Set the temperature 20 - 40 °C lower than for Conventional Cooking.
 Pizza Function	To bake pizza. To make intensive browning and a crispy bottom.
 Conventional Cooking	To bake and roast food on one shelf position.
 Bottom Heat	To bake cakes with crispy bottom and to preserve food.
 Defrost	To defrost food (vegetables and fruit). The defrosting time depends on the amount and size of the frozen food.

Oven function	Application
 Moist Fan Baking	This function is designed to save energy during cooking. For the cooking instructions refer to "Hints and tips" chapter, Moist Fan Baking. The oven door should be closed during cooking so that the function is not interrupted and to ensure that the oven operates with the highest energy efficiency possible. When you use this function, the temperature in the cavity may differ from the set temperature. The residual heat is used. The heating power may be reduced. For general energy saving recommendations refer to "Energy Efficiency" chapter, Energy Saving. This function was used to comply with the energy efficiency class according to EN 60350-1. When you use this function the lamp automatically turns off after 30 seconds.
 Fast Grilling	To grill flat food in large quantities and to toast bread.
 Turbo Grilling	To roast larger meat joints or poultry with bones on one shelf position. To make gratins and to brown.
 Pyrolysis	To turn on the pyrolytic cleaning of the oven. This function burns off residual dirt in the oven.

7.3 Setting a heating function

1. Turn the knob for the heating functions to select a heating function.

2. Turn the control knob to select the temperature.

The lamp turns on when the oven operates.

3. To turn off the oven, turn the knob for the heating functions to the off position.

7.4 Fast Heat Up

The fast heat up decreases the heat up time.

Do not put food in the oven when the Fast heat up operates.

1. Turn the knob for the oven functions to set the fast heat up.
2. Turn the knob for the temperature to set the temperature.

The signal sounds when the oven is at the set temperature.

3. Set an oven function.

7.5 Heat-up indicator

When the oven function operates, the bars in the display appear one by one when the temperature in the oven increases, and disappear when it decreases.

8. CLOCK FUNCTIONS

8.1 Clock functions table

Clock function	Application
TIME OF DAY	To show or change the time of day. You can change the time of day only when the oven is off.
DURATION	To set how long the oven works. Use only when a heating function is set.
END	To set when the oven turns off. Use only when a heating function is set.
TIME DELAY	Combination of DURATION and END function.
MINUTE MINDER	Use to set a countdown time. This function has no effect on the operation of the oven. You can set the MINUTE MINDER at any time, also if the oven is off.

8.2 Setting and changing the time

After the first connection to the mains, wait until the display shows **hr** and "**12:00**". "**12**" flashes.

1. Turn the knob for the temperature to set the hours.
2. Press to confirm and set the minutes.

The display shows **min** and the set hour. "**00**" flashes.

3. Turn the knob for the temperature to set the current minutes.
4. Press to confirm or the set time of day will be saved automatically after 5 seconds.

The display shows the new time.

To change the time of day press again and again until the indicator for the time of day flashes in the display.

8.3 Setting the DURATION function

1. Set a heating function.
2. Press again and again until starts to flash.
3. Turn the knob for the temperature to set the minutes and press to confirm. Turn the knob for the temperature to set the hours and press to confirm.

When the set Duration time ends the signal sounds for 2 minutes. and time setting flash in the display. The oven turns off automatically.

4. Press any button or open the oven door to stop the signal.

5. Turn the knob for the heating functions to the off position.

8.4 Setting the END function

1. Set a heating function.
2. Press ⏲ again and again until →| starts to flash.
3. Turn the knob for the temperature to set the hours and press ⏲ to confirm. Turn the knob for the temperature to set the minutes and press ⏲ to confirm.

At the set End time the signal sounds for 2 minutes. →| and time setting flash in the display. The oven turns off automatically.

4. Press any button or open the oven door to stop the signal.
5. Turn the knob for the heating functions to the off position.

8.5 Setting the TIME DELAY function

1. Set a heating function.
2. Press ⏲ again and again until |→| starts to flash.
3. Turn the knob for the temperature to set the minutes for DURATION time and press ⏲ to confirm. Turn the knob for the temperature to set the hours for DURATION time and press ⏲ to confirm.

The display shows flashing →|.

4. Turn the knob for the temperature to set the hours for END time and press ⏲ to confirm. Turn the knob for the temperature to set the minutes for END time and press ⏲ to confirm. The display shows |→|→| and the set temperature.

Oven turns on automatically later on, works for the set DURATION time and stops at the set END time.
At the set END time the signal sounds for 2 minutes. →| and time setting flash in the display. The oven turns off.

5. Press any button or open the oven door to stop the signal.
6. Turn the knob for the heating functions to the off position.

8.6 Setting the MINUTE MINDER

Minute minder can be both set when the oven is turned on and off.

1. Press 🔔 3sec again and again until 🔔 and "**00**" flash in the display.
2. Turn the knob for the temperature to set the seconds and than the minutes.
   When the time you set is longer than 60 minutes, **hr** flash in the display.
3. Set the hours.
4. The MINUTE MINDER starts automatically after 5 seconds.
   After 90% of the set time the signal sounds.
5. When the set time ends the signal sounds for 2 minutes. "**00:00**" and 🔔 flash in the display. Press any button to stop the signal.

9. USING THE ACCESSORIES

WARNING!
Refer to Safety chapters.

9.1 Inserting the accessories

Wire shelf:

Push the shelf between the guide bars of the shelf support and make sure that the feet point down.

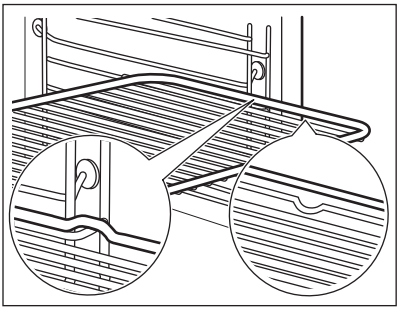

Baking tray/ Deep pan:

Push the baking tray / deep pan between the guide bars of the shelf support.

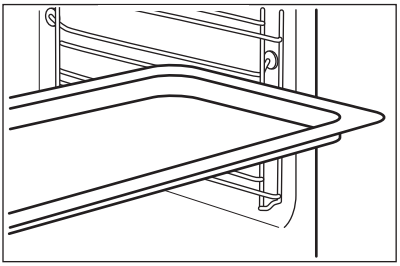

Wire shelf and baking tray / deep pan together:

Push the baking tray / deep pan between the guide bars of the shelf support and the wire shelf on the guide bars above.

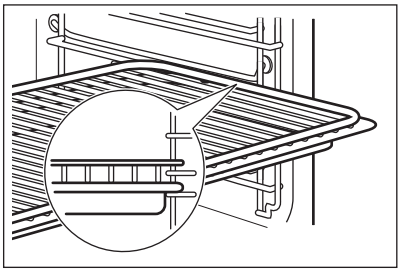

Small indentation at the top increase safety. The indentations are also anti-tip devices. The high rim around the shelf prevents cookware from slipping of the shelf.

10. ADDITIONAL FUNCTIONS

10.1 Using the Child Lock

When the Child Lock is on the oven cannot be turned on accidentally.

1. Ensure the knob for the oven functions is in the off position.
2. Press and hold ⏲ and °C at the same time for 2 seconds.

The signal sounds. SAFE and 🔒 appear on the display. The door is locked.

The symbol 🔒 appear on the display also when Pyrolysis function operates.

To turn off the Child Lock, repeat step 2.

10.2 Using the Function Lock

You can turn on the Function Lock function only when the oven operates.

When the Function lock is on the temperature and time settings of a running oven function cannot be changed accidentally.

1. Select an oven function and set it according your preferences.
2. Press and hold ⏲ and °C at the same time for 2 seconds.

The signal sounds. Loc appears on the display for 5 seconds.

Loc appears on the display when you turn the knob for the temperature or press any button when the Function lock is on.

When you turn the knob for the oven functions, the oven stops.

When you turn off the oven while the Function Lock is on, the Function Lock switches automatically to the Child Lock. Refer to "Using the Child Lock".

If the Pyrolysis function operates, the door is locked and appears on the display.

To turn off the Function Lock, repeat step 2.

10.3 Residual heat indicator

When you turn off the oven, the display shows the residual heat indicator if the temperature in the oven is more than 40 °C.Turn the knob for the temperature left or right to check the oven temperature.

10.4 Automatic Switch-Off

For safety reasons the oven turns off automatically after some time, if a heating function works and you do not change any settings.

(°C)	(h)
30 - 115	12.5
120 - 195	8.5
200 - 245	5.5
250 - maximum	3
Pyrolysis	4.5

The Automatic Switch-off does not work with the functions: Light, Duration, End Time.

10.5 Cooling fan

When the oven operates, the cooling fan turns on automatically to keep the surfaces of the oven cool. If you turn off the oven, the cooling fan can continue to operate until the oven cools down.

10.6 Safety thermostat

Incorrect operation of the oven or defective components can cause dangerous overheating. To prevent this, the oven has a safety thermostat which interrupts the power supply. The oven turns on again automatically when the temperature drops.

11. HINTS AND TIPS

WARNING!
Refer to Safety chapters.

The temperature and baking times in the tables are guidelines only. They depend on the recipes and the quality and quantity of the ingredients used.

11.1 Cooking recommendations

The oven has five shelf positions.

Count the shelf positions from the bottom of the oven floor.

Your oven may bake or roast differently to the oven you had before. The below tables provide you with the standard settings for temperature, cooking time and shelf position.

If you cannot find the settings for a special recipe, look for the similar one.

The oven has a special system which circulates the air and constantly recycles the steam. With this system you can cook in a steamy environment and keep the food soft inside and crusty outside. It decreases the cooking time and energy consumption.

Baking cakes
Do not open the oven door before 3/4 of the set cooking time is up.

If you use two baking trays at the same time, keep one empty level between them.

Cooking meat and fish
Use a deep pan for very fatty food to prevent the oven from stains that can be permanent.

Leave the meat for approximately 15 minutes before carving so that the juice does not seep out.

To prevent too much smoke in the oven during roasting, add some water into the deep pan. To prevent the smoke condensation, add water each time after it dries up.

Cooking times
Cooking times depend on the type of food, its consistency, and volume.

Initially, monitor the performance when you cook. Find the best settings (heat setting, cooking time, etc.) for your cookware, recipes and quantities when you use this appliance.

11.2 Inner side of the door

On the inner side of the door you can find:

- the numbers of the shelf positions.
- information about the oven functions, recommended shelf positions and temperatures for dishes.

11.3 Baking and roasting

CAKES						
	Conventional Cooking		True Fan Cooking		(min)	
	(°C)		(°C)			
Whisked recipes	170	2	160	3 (2 and 4)	45 - 60	Cake mould
Shortbread dough	170	2	160	3 (2 and 4)	20 - 30	Cake mould
Buttermilk cheesecake	170	1	165	2	80 - 100	Cake mould, Ø 26 cm
Strudel	175	3	150	2	60 - 80	Baking tray
Jam tart	170	2	165	2	30 - 40	Cake mould, Ø 26 cm
Sponge cake	170	2	150	2	40 - 50	Cake mould, Ø 26 cm
Christmas cake, preheat the empty oven	160	2	150	2	90 - 120	Cake mould, Ø 20 cm
Plum cake, preheat the empty oven	175	1	160	2	50 - 60	Bread tin

CAKES

	Conventional Cooking		True Fan Cooking		(min)	
	(°C)		(°C)			
Muffins, preheat the empty oven	170	3	150 - 160	3	20 - 30	Baking tray
Muffins, two levels, preheat the empty oven	-	-	140 - 150	2 and 4	25 - 35	Baking tray
Muffins, three levels, preheat the empty oven	-	-	140 - 150	1, 3 and 5	30 - 45	Baking tray
Biscuits	140	3	140 - 150	3	25 - 45	Baking tray
Biscuits, two levels	-	-	140 - 150	2 and 4	35 - 40	Baking tray
Biscuits, three levels	-	-	140 - 150	1, 3 and 5	35 - 45	Baking tray
Meringues	120	3	120	3	80 - 100	Baking tray
Meringues, two levels, preheat the empty oven	-	-	120	2 and 4	80 - 100	Baking tray
Buns, preheat the empty oven	190	3	190	3	12 - 20	Baking tray
Eclairs	190	3	170	3	25 - 35	Baking tray
Eclairs, two levels	-	-	170	2 and 4	35 - 45	Baking tray
Plate tarts	180	2	170	2	45 - 70	Cake mould, Ø 20 cm
Rich fruit cake	160	1	150	2	110 - 120	Cake mould, Ø 24 cm

Preheat the empty oven.

BREAD AND PIZZA

	Conventional Cooking		True Fan Cooking		(min)	
	(°C)		(°C)			
White bread, 1 - 2 pieces, 0.5 kg each	190	1	190	1	60 - 70	-
Rye bread, preheating is not needed	190	1	180	1	30 - 45	Bread tin
Bread rolls, 6 - 8 rolls	190	2	180	2 (2 and 4)	25 - 40	Baking tray
Pizza	230 - 250	1	230 - 250	1	10 - 20	Baking tray / Deep pan
Scones	200	3	190	3	10 - 20	Baking tray

Preheat the empty oven.

Use the cake mould.

FLANS

	Conventional Cooking		True Fan Cooking		(min)
	(°C)		(°C)		
Pasta flan, preheating is not needed	200	2	180	2	40 - 50
Vegetable flan, preheating is not needed	200	2	175	2	45 - 60
Quiches	180	1	180	1	50 - 60
Lasagne	180 - 190	2	180 - 190	2	25 - 40
Cannelloni	180 - 190	2	180 - 190	2	25 - 40

Use the second shelf position.

Use the wire shelf.

MEAT

	Conventional Cooking (°C)	True Fan Cooking (°C)	(min)
Beef	200	190	50 - 70
Veal	190	175	90 - 120
English roast beef, rare	210	200	50 - 60
English roast beef, medium	210	200	60 - 70
English roast beef, well done	210	200	70 - 75

MEAT

	Conventional Cooking		True Fan Cooking		(min)
	(°C)		(°C)		
Leg of lamb	190	2	175	2	110 - 130
Whole chicken	220	2	200	2	70 - 85
Whole turkey	180	2	160	2	210 - 240
Whole duck	175	2	220	2	120 - 150
Whole goose	175	2	160	1	150 - 200
Rabbit, cut in pieces	190	2	175	2	60 - 80
Hare, cut in pieces	190	2	175	2	150 - 200
Whole pheasant	190	2	175	2	90 - 120

Use the second shelf position.

FISH			
	Conventional Cooking	True Fan Cooking	(min)
	(°C)	(°C)	
Trout / Sea bream, 3 - 4 fish	190	175	40 - 55
Tuna / Salmon, 4 - 6 fillets	190	175	35 - 60

11.4 Grill

Preheat the empty oven.

Use the fourth shelf position.

Grill with the maximum temperature setting.

GRILL			
	(kg)	(min) 1st side	(min) 2nd side
Fillet steaks, 4 pieces	0.8	12 - 15	12 - 14
Beef steak, 4 pieces	0.6	10 - 12	6 - 8
Chicken, half, 2	1	30 - 35	25 - 30
Kebabs, 4	-	10 - 15	10 - 12
Chicken breast, 4 pieces	0.4	12 - 15	12 - 14
Burgers, 6	0.6	20 - 30	-
Fish fillet, 4 pieces	0.4	12 - 14	10 - 12
Toasted sandwiches, 4 - 6	-	5 - 7	-
Toast, 4 - 6	-	2 - 4	2 - 3

11.5 Turbo Grilling

Preheat the empty oven.

Use the first or the second shelf position.

To calculate the roasting time multiple the time given in the table below by the centimetres of thickness of the fillet.

BEEF

	(°C)	(min)
Roast beef or fillet, rare	190 - 200	5 - 6
Roast beef or fillet, medium	180 - 190	6 - 8
Roast beef or fillet, well done	170 - 180	8 - 10

VEAL

	(°C)	(min)
Roast veal, 1 kg	160 - 180	90 - 120
Veal knuckle, 1.5 - 2 kg	160 - 180	120 - 150

LAMB

	(°C)	(min)
Lamb leg / Roast lamb, 1 - 1.5 kg	150 - 170	100 - 120
Lamb saddle, 1 - 1.5 kg	160 - 180	40 - 60

POULTRY

	(°C)	(min)
Poultry, portions, 0.2 - 0.25 kg each	200 - 220	30 - 50
Chicken, half, 0.4 - 0.5 kg each	190 - 210	35 - 50
Chicken, poulard, 1 - 1.5 kg	190 - 210	50 - 70
Duck, 1.5 - 2 kg	180 - 200	80 - 100
Goose, 3.5 - 5 kg	160 - 180	120 - 180
Turkey, 2.5 - 3.5 kg	160 - 180	120 - 150
Turkey, 4 - 6 kg	140 - 160	150 - 240

FISH (STEAMED)

	(°C)	(min)
Whole fish, 1 - 1.5 kg	210 - 220	40 - 60

11.6 Defrost

	(kg)	Defrosting time (min)	Further defrosting time (min)	
Chicken	1	100 - 140	20 - 30	Place chicken on an upturned saucer placed on a large plate. Turn halfway through.
Meat	1	100 - 140	20 - 30	Turn halfway through.
	0.5	90 - 120		
Cream	2 x 0.2	80 - 100	10 - 15	Cream can also be whipped when still slightly frozen in places.
Trout	0.15	25 - 35	10 - 15	-
Strawberries	0.3	30 - 40	10 - 20	-
Butter	0.25	30 - 40	10 - 15	-
Gateau	1.4	60	60	-

11.7 Dehydrating - True Fan Cooking

Cover trays with grease proof paper or baking parchment.

For a better result, stop the oven halfway through the drying time, open the door and let it cool down for one night to complete the drying.

For 1 tray use the third shelf position.

For 2 trays use the first and fourth shelf position.

VEGETABLES

	(°C)	(h)
Beans	60 - 70	6 - 8
Peppers	60 - 70	5 - 6

VEGETABLES

	(°C)	(h)
Vegetables for soup	60 - 70	5 - 6
Mushrooms	50 - 60	6 - 8
Herbs	40 - 50	2 - 3

Set the temperature to 60 - 70 °C.

FRUIT

	(h)
Plums	8 - 10
Apricots	8 - 10

FRUIT	
	(h)
Apple slices	6 - 8
Pears	6 - 9

11.8 Moist Fan Baking - recommended accessories

Use the dark and non-reflective tins and containers. They have better heat absorption than the light colour and reflective dishes.

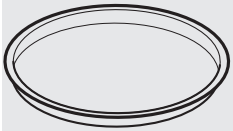 Pizza pan	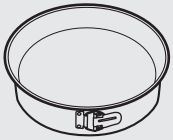 Baking dish	 Ramekins	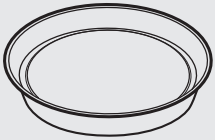 Flan base tin
Dark, non-reflective 28 cm diameter	Dark, non-reflective 26 cm diameter	Ceramic 8 cm diameter, 5 cm height	Dark, non-reflective 28 cm diameter

11.9 Moist Fan Baking

For the best results follow suggestions listed in the table below.

		(°C)		(min)
Sweet rolls, 16 pieces	baking tray or dripping pan	180	2	20 - 30
Rolls, 9 pieces	baking tray or dripping pan	180	2	30 - 40
Pizza, frozen, 0.35 kg	wire shelf	220	2	10 - 15
Swiss roll	baking tray or dripping pan	170	2	25 - 35
Brownie	baking tray or dripping pan	175	3	25 - 30
Soufflè, 6 pieces	ceramic ramekins on wire shelf	200	3	25 - 30
Sponge flan base	flan base tin on wire shelf	180	2	15 - 25

		(°C)		(min)
Victoria sandwich	baking dish on wire shelf	170	2	40 - 50
Poached fish, 0.3 kg	baking tray or dripping pan	180	3	20 - 25
Whole fish, 0.2 kg	baking tray or dripping pan	180	3	25 - 35
Fish fillet, 0.3 kg	pizza pan on wire shelf	180	3	25 - 30
Poached meat, 0.25 kg	baking tray or dripping pan	200	3	35 - 45
Shashlik, 0.5 kg	baking tray or dripping pan	200	3	25 - 30
Cookies, 16 pieces	baking tray or dripping pan	180	2	20 - 30
Macaroons, 24 pieces	baking tray or dripping pan	180	2	25 - 35
Muffins, 12 pieces	baking tray or dripping pan	170	2	30 - 40
Savory pastry, 20 pieces	baking tray or dripping pan	180	2	25 - 30
Short crust biscuits, 20 pieces	baking tray or dripping pan	150	2	25 - 35
Tartlets, 8 pieces	baking tray or dripping pan	170	2	20 - 30
Vegetables, poached, 0.4 kg	baking tray or dripping pan	180	3	35 - 45
Vegetarian omelette	pizza pan on wire shelf	200	3	25 - 30
Mediterranean vegetables, 0.7 kg	baking tray or dripping pan	180	4	25 - 30

11.10 Information for test institutes

Tests according to IEC 60350-1.

				(°C)	(min)	
Small cakes, 20 per tray	Conventional Cooking	Baking tray	3	170	20 - 30	-
Small cakes, 20 per tray	True Fan Cooking	Baking tray	3	150 - 160	20 - 35	-
Small cakes, 20 per tray	True Fan Cooking	Baking tray	2 and 4	150 - 160	20 - 35	-
Apple pie, 2 tins Ø20 cm	Conventional Cooking	Wire shelf	2	180	70 - 90	-
Apple pie, 2 tins Ø20 cm	True Fan Cooking	Wire shelf	2	160	70 - 90	-
Sponge cake, cake mould Ø26 cm	Conventional Cooking	Wire shelf	2	170	40 - 50	Preheat the oven for 10 minutes.
Sponge cake, cake mould Ø26 cm	True Fan Cooking	Wire shelf	2	160	40 - 50	Preheat the oven for 10 minutes.
Sponge cake, cake mould Ø26 cm	True Fan Cooking	Wire shelf	2 and 4	160	40 - 60	Preheat the oven for 10 minutes.
Short bread	True Fan Cooking	Baking tray	3	140 - 150	20 - 40	-
Short bread	True Fan Cooking	Baking tray	2 and 4	140 - 150	25 - 45	-
Short bread	Conventional Cooking	Baking tray	3	140 - 150	25 - 45	-
Toast, 4 - 6 pieces	Grill	Wire shelf	4	max.	2 - 3 minutes first side; 2 - 3 minutes second side	Preheat the oven for 3 minutes.

				(°C)	(min)	
Beef burger, 6 pieces, 0.6 kg	Grill	Wire shelf and dripping pan	4	max.	20 - 30	Put the wire shelf on the fourth level and the dripping pan on the third level of the oven. Turn the food halfway through the cooking time. Preheat the oven for 3 minutes.

12. CARE AND CLEANING

WARNING!
Refer to Safety chapters.

12.1 Notes on cleaning

Cleaning Agents	Clean the front of the oven with a soft cloth with warm water and a mild cleaning agent.
	To clean metal surfaces, use a dedicated cleaning agent.
	Clean stubborn stains with a special oven cleaner.

Everyday Use	Clean the oven cavity after each use. Fat accumulation or other food remains may cause fire. The risk is higher for the grill pan.
	Moisture can condense in the oven or on the door glass panels. To decrease the condensation, operate the oven for 10 minutes before cooking. Dry the cavity with a soft cloth after each use.

Accessories	Clean all accessories after each use and let them dry. Use a soft cloth with warm water and a cleaning agent. Do not clean the accessories in a dishwasher.
	Do not clean the non-stick accessories using aggressive agents, sharp-edged objects or in a dishwasher.

12.2 Stainless steel or aluminium ovens

Clean the oven door with a damp cloth or sponge only. Dry it with a soft cloth.

Do not use steel wool, acids or abrasive materials as they can damage the oven surface. Clean the oven control panel with the same precautions.

12.3 Removing the shelf supports

To clean the oven, remove the shelf supports.

CAUTION!
Be careful when you remove the shelf supports.

1. Pull the front of the shelf support away from the side wall.

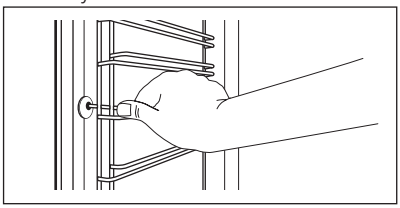

2. Pull the rear end of the shelf support away from the side wall and remove it.

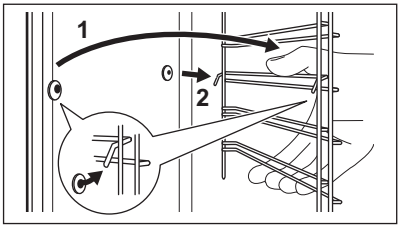

Install the removed accessories in the opposite sequence.

12.4 Pyrolysis

CAUTION!
Remove all accessories and removable shelf supports.

Do not start the Pyrolysis if you did not fully close the oven door. In some models, the display shows "C3" when this error occurs.

WARNING!
The oven becomes very hot. There is a risk of burns.

CAUTION!
If there are other appliances installed in the same cabinet, do not use them when the Pyrolysis function operates. It can cause damage to the appliance.

1. Wipe out the cavity with a wet, soft cloth.
2. Clean the inner side of the door with hot water, so that the residues do not burn from the hot air.
3. Set the Pyrolysis function. Refer to "Daily use" chapter, "Oven Functions".
4. When |→| flashes, turn the knob for the temperature to set the pyrolysis duration:

Option	Description
P1	Light cleaning. Duration: 2 h.
P2	Normal cleaning. Duration: 2 h 30 min.

After 2 seconds the pyrolysis starts.
You can use the END function to delay the start of the cleaning.
During the pyrolysis the oven lamp is off.

5. When the oven is at the set temperature, the door locks. The display shows and the bars of the heat indicator until the door unlocks. To stop pyrolysis before it is completed, turn the knob for the oven functions to the off position.
6. When pyrolysis is completed, the display shows the time of day. The oven door stays locked.
7. When the oven is cool again, the door unlocks.

12.5 Cleaning reminder

To remind you that the pyrolysis is necessary, PYR flashes in the display for 10 seconds after each activation and deactivation of the oven.

The cleaning reminder goes out:

- after the end of the pyrolysis.
- if you press 3sec and °C at the same time while PYR flashes in the display.

12.6 Removing and installing door

The oven door has four glass panels. You can remove the oven door and the internal glass panels to clean them. Read the whole "Removing and installing door" instruction before you remove the glass panels.

The oven door may close if you try to remove the glass panels before you remove the oven door.

CAUTION!
Do not use the oven without the glass panels.

1. Fully open the door and find the hinge to the right side of the door.
2. Use a screwdriver to lift and turn fully the right side hinge lever.

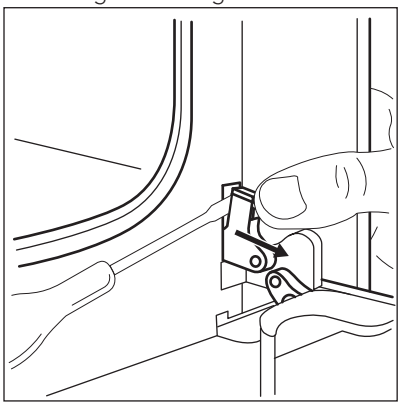

3. Find the hinge to the left side of the door.

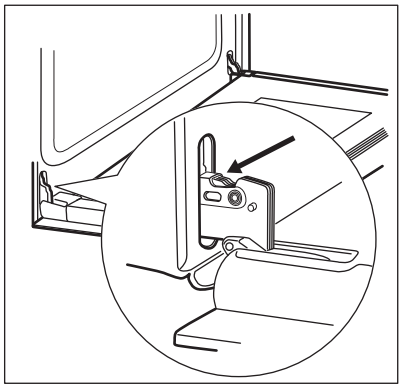

4. Lift and turn the lever fully on the left hinge.

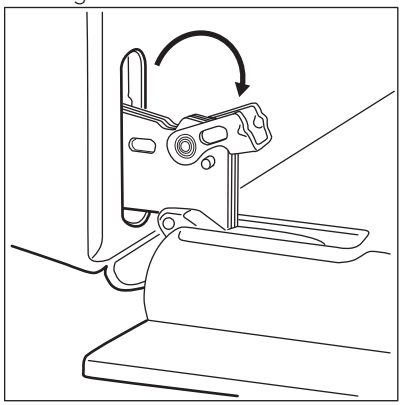

5. Close the oven door halfway to the first opening position. Then lift and pull forward and remove the door from its seat.

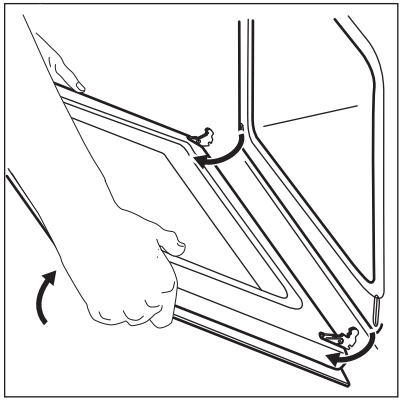

6. Put the door on a soft cloth on a stable surface.

7. Hold the door trim (B) on the top edge of the door at the two sides and push inwards to release the clip seal.

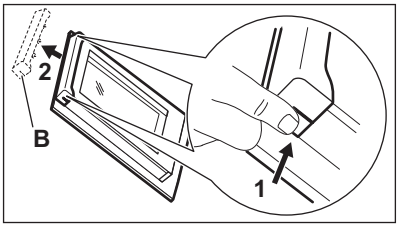

8. Pull the door trim to the front to remove it.
9. Hold the door glass panels by their top edge and carefully pull them out one by one. Start from the top panel. Make sure the glass slides out of the supports completely.

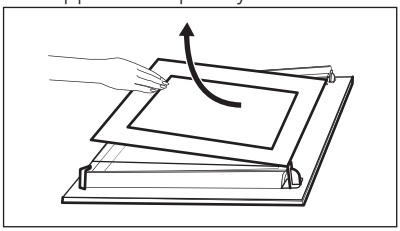

10. Clean the glass panels with water and soap. Dry the glass panels carefully. Do not clean the glass panels in the dishwasher.

When the cleaning is completed, install the glass panels and the oven door.

Make sure that you put the glass panels (A, B and C) back in the correct sequence. Check for the symbol / printing on the side of the glass panel, each of the glass panels looks different to make the disassembly and assembly easier.

When installed correctly the door trim clicks.

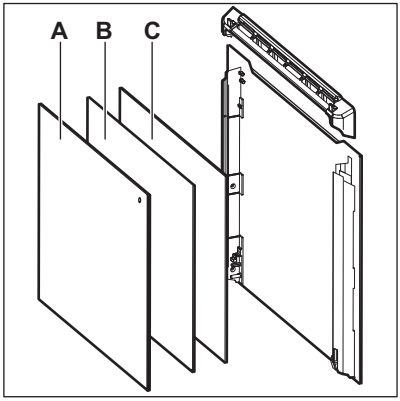

Make sure that you install the middle panel of glass in the seats correctly.

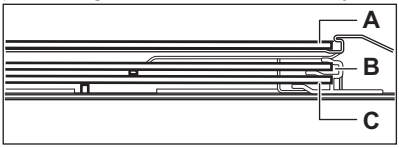

12.7 Replacing the lamp

WARNING!
Risk of electric shock.
The lamp can be hot.

1. Turn off the oven.

Wait until the oven is cooled down.

2. Disconnect the oven from the mains.
3. Put a cloth on the bottom of the cavity.

CAUTION!
Always hold the halogen lamp with a cloth to prevent grease residue from burning on the lamp.

The back lamp

1. Turn the lamp glass cover to remove it.
2. Clean the glass cover.
3. Replace the lamp with a suitable 300 °C heat-resistant lamp.
4. Install the glass cover.

13. TROUBLESHOOTING

WARNING!
Refer to Safety chapters.

13.1 What to do if...

Problem	Possible cause	Remedy
You cannot activate or operate the oven.	The oven is not connected to an electrical supply or it is connected incorrectly.	Check if the oven is correctly connected to the electrical supply (refer to the connection diagram if available).
The oven does not heat up.	The oven is deactivated.	Activate the oven.
The oven does not heat up.	The clock is not set.	Set the clock.
The oven does not heat up.	The necessary settings are not set.	Make sure that the settings are correct.
The oven does not heat up.	The automatic switch-off is activated.	Refer to "Automatic switch-off".
The oven does not heat up.	The Child Lock is on.	Refer to "Using the Child Lock".
The oven does not heat up.	The door is not closed correctly.	Fully close the door.
The oven does not heat up.	The fuse is blown.	Make sure that the fuse is the cause of the malfunction. If the fuse is blown again and again, contact a qualified electrician.
The lamp does not operate.	The lamp is defective.	Replace the lamp.
Steam and condensation settle on the food and in the cavity of the oven.	You left the dish in the oven for too long.	Do not leave the dishes in the oven for longer than 15 - 20 minutes after the cooking process ends.
The display shows "C3".	The cleaning function does not operate. You did not fully close the door, or the door lock is defective.	Fully close the door.
The display shows "F102".	• You did not fully close the door. • The door lock is defective.	• Fully close the door. • Deactivate the oven with the house fuse or the safety switch in the fuse box and activate it again. • If the display shows "F102" again, contact the Customer Care Department.

Problem	Possible cause	Remedy
The display shows an error code that is not in this table.	There is an electrical fault.	• Deactivate the oven with the house fuse or the safety switch in the fuse box and activate it again. • If the display shows the error code again, contact the Customer Care Department.
The appliance is activated and does not heat up. The fan does not operate. The display shows **"Demo"**.	The demo mode is activated.	1. Deactivate the oven. 2. Press and hold at the same time 3sec °C. 3. The first digit on the display and **Demo** indicator start to blink. 4. Enter the code 2468 by turning the knob for the temperature right or left to change the values and press to confirm. 5. The next digit starts to blink. 6. **Demo** mode deactivates when you confirm the last digit and the code is correct.
The display shows "12.00".	There was a power cut.	Reset the clock.

13.2 Service data

If you cannot find a solution to the problem yourself, contact your dealer or an Authorised Service Centre.

The necessary data for the service centre is on the rating plate. The rating plate is on the front frame of the oven cavity. Do not remove the rating plate from the oven cavity.

We recommend that you write the data here:	
Model (MOD.)	.....
Product number (PNC)	.....
Serial number (S.N.)	.....

14. ENERGY EFFICIENCY

14.1 Energy saving



The oven contains features which help you save energy during everyday cooking.

Make sure that the oven door is closed properly when the oven operates. Do not open the door too often during cooking. Keep the door gasket clean and make sure it is well fixed in its position.

Use metal cookware to improve energy saving.

When possible, do not preheat the oven before cooking.

Keep breaks between baking as short as possible when you prepare a few dishes at one time.

Cooking with fan
When possible, use the cooking functions with fan to save energy.

Residual heat
If a programme with the Duration or End Time selection is activated and the cooking time is longer than 30 minutes, the heating elements automatically turn off earlier in some oven functions.

The fan and lamp continue to operate. When you turn off the oven, the display shows the residual heat. You can use that heat to keep the food warm.

When the cooking duration is longer than 30 minutes, reduce the oven temperature to minimum 3 - 10 minutes before the end of cooking. The residual heat inside the oven will continue to cook.

Use the residual heat to warm up other dishes.

Keep food warm
Choose the lowest possible temperature setting to use residual heat and keep a meal warm. The residual heat indicator or temperature appears on the display.

Moist Fan Baking
Function designed to save energy during cooking.

When you use this function the lamp automatically turns off after 30 seconds.

15. SAUDI ARABIA - CUSTOMER SERVICE

Further after-sales service agencies overseas

In these countries our respective agents' own guarantee conditions are applicable. Please obtain further details directly.

Awad Badi Nahas Trading Co. Ltd.

Address:

RAWDAH DISTRICT, BEHIND SARI ST., JEDDAH P.O. BOX 11529 JEDDAH 21463

Kingdom of Saudi Arabia

Contact numbers:

Tel: +966 2 2560888/+966 2 2561333

Fax: +966 2 2560555

Customer Service (Maintenance & Spare Parts)

Tel: +966 2 920003240

E-mail: info@awadnahas.com

Website: www.awadnahas.com

http://www.facebook.com/awadbadinahas

http://twitter.com/awadbadinahas

Alia Trading Establishment

P.O.BOX: 4101

Riyadh: 11491

Showroom tel: 00966 1 464 5977

Service Center tel: 00966 1 463 1957

Fax: 00966 1 465 8103

Riyadh — Olaya

Makkah Road

Saudi Arabia

16. ENVIRONMENTAL CONCERNS

Recycle materials with the symbol ♺. Put the packaging in relevant containers to recycle it. Help protect the environment and human health by recycling waste of electrical and electronic appliances. Do not dispose of appliances marked with the symbol with the household waste. Return the product to your local recycling facility or contact your municipal office.

www.aeg.com/shop



867341864-B-172019

CE

Made in Italy

AEG