Register your product and get support at

www.philips.com/welcome

Notebook mouse

SPM6910
SPM6910X



EN User manual

PHILIPS

1

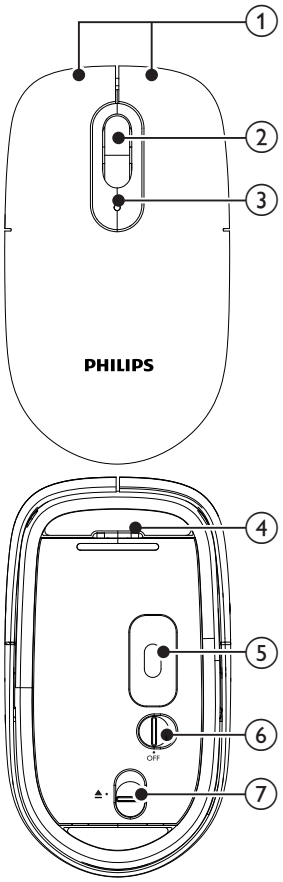

2

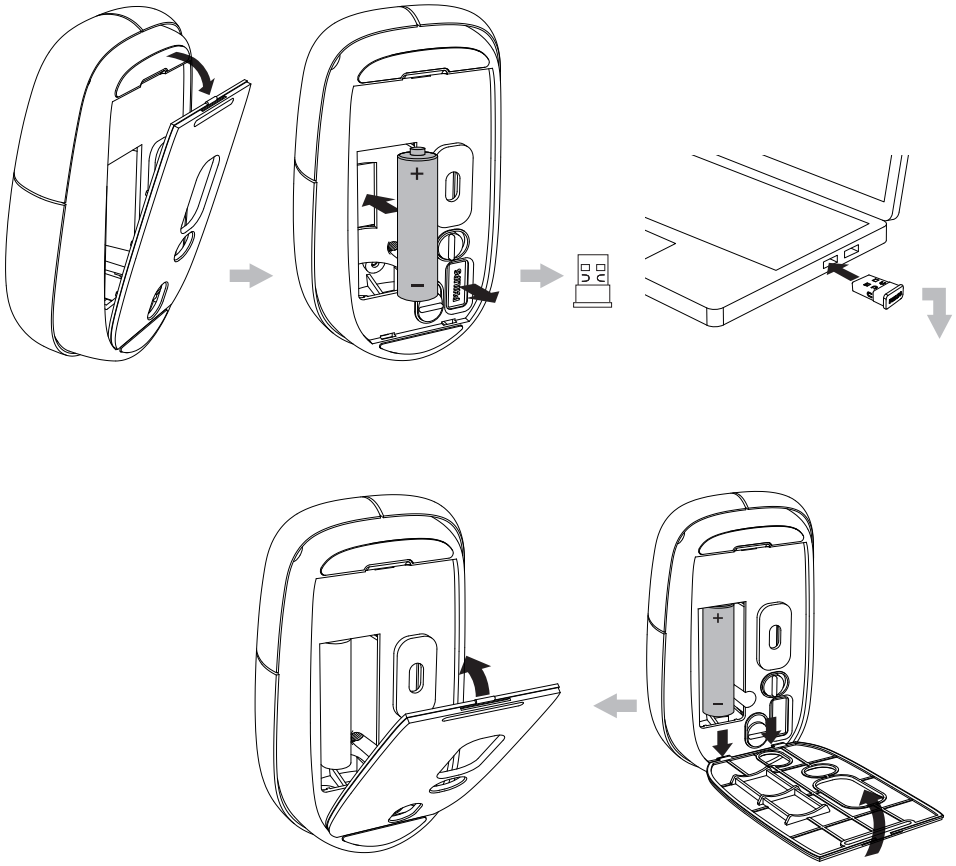

Contents

1 Important 4
Health Warning 4
Electric-, Magnetic- and Electromagnetic Fields (EMF) 4
Disposal of your old product 4

2 System requirements 5

3 Function overview 6

4 Troubleshooting 7

1 Important

Health Warning

Improper work habits when using of a keyboard or mouse may result in discomfort or serious injury such as strain to your hands,wrists or other parts of your body.
Whether you are working or playing, it is important to avoid awkward postures and position your body comfortably. Not only can this improve your overall productivity, it may help you avoid MSDs (Musculoskeletal Disorders).
Changing your posture during extended tasks may also help you avoid discomfort and fatigue.

Electric-, Magnetic- and Electromagnetic Fields (EMF)

1. Royal Philips Electronics manufactures and sells many products targeted at consumers, which, like any electronic apparatus, in general have the ability to emit and receive electromagnetic signals.
2. One of Philips' leading Business Principles is to take all necessary health and safety measures for our products, to comply with all applicable legal requirements and to stay well within the EMF standards applicable at the time of producing products.
3. Philips is committed to develop, produce and market products that cause no adverse health effects.
4. Philips confirms that if its products are handled properly for their intended use, they are safe to use according to scientific evidence available today.
5. Philips plays an active role in the development of international EMF and safety standards, enabling Philips to anticipate further developments in standardization for early integration in its products.

Disposal of your old product



Your product is designed and manufactured with high quality materials and components, which can be recycled and reused.



When this crossed-out wheeled bin symbol is attached to a product it means that the product is covered by the European Directive 2002/96/EC.
Please inform yourself about the local separate collection system for electrical and electronic products.
Please act according to your local rules and do not dispose of your old products with your normal household waste. Correct disposal of your old product helps to prevent potential negative consequences for the environment and human health.



Your product contains batteries covered by the European Directive 2006/66/EC, which cannot be disposed with normal household waste.Please inform yourself about the local rules on separate collection of batteries because correct disposal helps to prevent negative consequences for the environmental and human health.

2 System requirements

- Windows® 7, Vista, XP; Mac OS® X 10.4 and above
- USB port

3 Function overview

1. Left and right click buttons
2. Scroll wheel
3. LED indicator
4. Battery compartment
5. Laser sensor
6. Power switch
7. Height adjustment (2 levels)

Battery status	Indicator status
Power on	Flash once
Power low	Blinking

4 Troubleshooting

- Ensure that the Nano Dongle of your mouse is properly plugged into a USB port on your computer.
- Ensure that there is power in the battery.
- Ensure that batteries are inserted with correct polarity (+/-) as indicated.
- Ensure that you are not using the product on glass.
- If no response from the product, ensure that you use the product within effective range.

Philips Consumer Lifestyle

AQ95-56F-1292KR

(Report No. / Numéro du Rapport)

2010

(Year in which the CE mark is affixed / Année au cours de laquelle le marquage CE a été apposé)

EC DECLARATION OF CONFORMITY

(DECLARATION DE CONFORMITE CE)

We / Nous, PHILIPS CONSUMER LIFESTYLE B.V.
(Name / Nom de l'entreprise)

TUSSENDIEPEN 4, 9206 AD DRACHTEN, THE NETHERLANDS
(address / adresse)

Declare under our responsibility that the electrical product(s):
(Déclarons sous notre propre responsabilité que le(s) produit(s) électrique(s):)

PHILIPS

(brand name, nom de la marque)

SPM6910/10, SPM6910X/10
SPM6910/28, SPM6910X/28,
SPM6910D

(Type version or model, référence ou modèle)

Wireless Netbook Mouse & Nano Dongle

(product description, description du produit)

To which this declaration relates is in conformity with the following harmonized standards:
(Auquel cette déclaration se rapporte, est conforme aux normes harmonisées suivantes)
(title, number and date of issue of the standard / titre, numéro et date de parution de la norme)

EN 60950:2006+A11:2009
EN 60825-1:2007;
EN 62311:2008
EN 301489-1 V1.8.1:2008;
EN 301489-3 V1.4.2:2002
EN 300440-1 V1.5.1:2009;
EN 300440-2 V1.3.1:2008

Following the provisions of :
(Conformément aux exigences essentielles et autres dispositions pertinentes de:)

1999/5/EC (R&TTE Directive)

And are produced under a quality scheme at least in conformity with ISO 9001 or CENELEC Permanent Documents
(Et sont fabriqués conformément à une qualité au moins conforme à la norme ISO 9001 ou aux Documents Permanents CENELEC)

The Notified Body (L'Organisme Notifié) TUV Rheinland LGA Products GmbH/ CE0197 *(Name and number/ nom et numéro)* performed (a effectué) Statement of Opinion (description of intervention / description de l'intervention)

And issued the certificate, *(et a délivré le certificat)* RT 60033256 0001 / RT 60033258 0001 *(certificate number / numéro du certificat)*

Remarks:
(Remarques:)

Drachten, The Netherlands, 02.09.2010
(place,date / lieu, date)

A.Speelman, CL Compliance Manager
(signature, name and function / signature, nom et fonction)



© 2010 Koninklijke Philips Electronics N.V.
All rights reserved.
SPM6910_UM_10_V1.1

CE 0197

