AG neovo

FMC-04



160 kg
(353 lb)

Installation Manual

Floor Mounting Cart

AG Neovo Floor Mounting Carts.

The FMC-04 is an easy to move and adjust floor mounting cart designed specifically for large displays up to 98" (160 kg). Working with the AG Neovo mounting bracket (LMK-04) results in a durable solution for training and presentation applications in public and multi-user environments.

MOUNTING INSTRUCTIONS

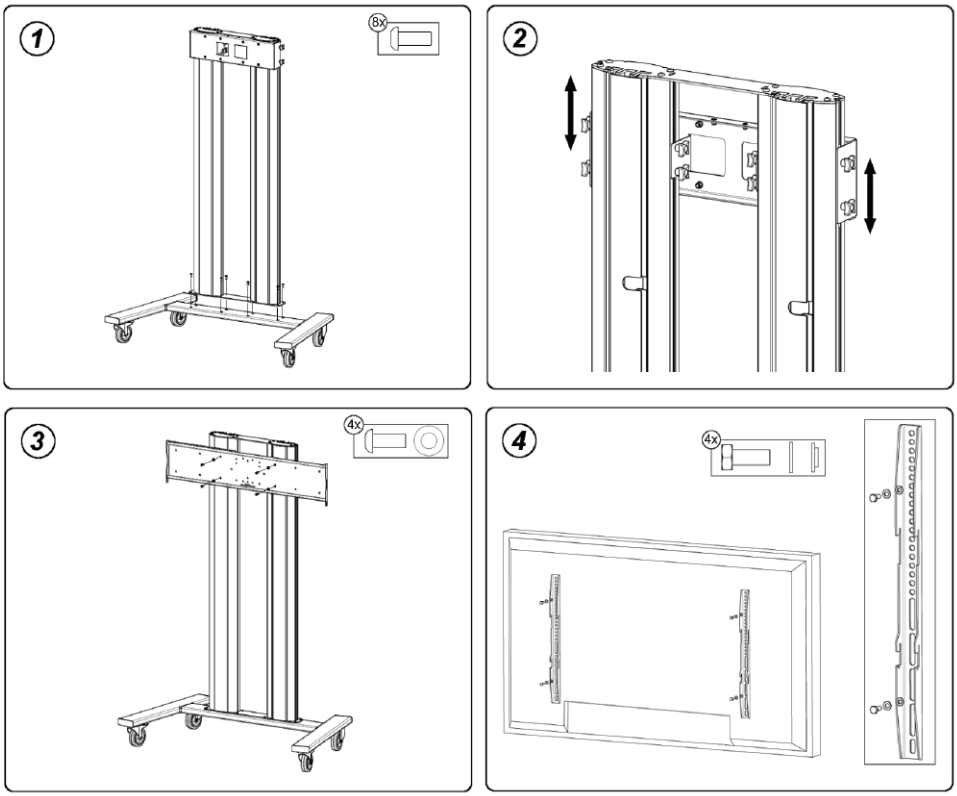

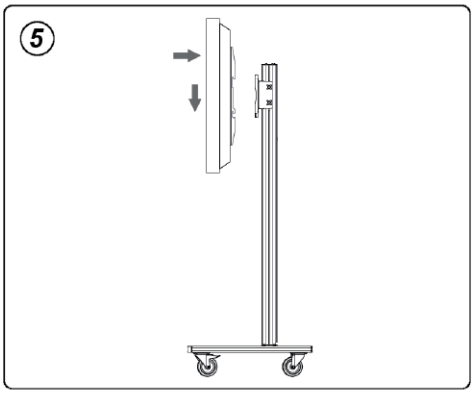

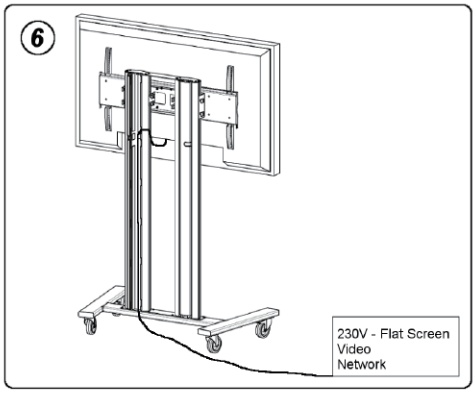

1. Mount the two columns to the wheel frame.
2. Loose the eight knobs on the inside and outside of the stand head and slide the stand head to the preferred height. Tighten the eight knobs again.
3. Mount the back plate of AG Neovo LMK-04 to the stand head.
4. Mount the two mount profiles to the back of the display. Divide the profiles in height as well as possible.
5. Connect the display to the stand and make sure it is centered.
6. Run the cables through the aluminum column. Connect the cables to the display.

SPECIFICATION

Maximum Length	1960 mm
Weight	68.00 kg
Colour	Dark, Aluminum
Maximum Loading	160 kg
Screen Position	Landscape / Portrait
Display Range	Max. 98”
Mobile or Fixed	Mobile
Height Adjustment	Manual
Bracket / Interface	Excluded (AG Neovo LMK-04)
Mounting System	Universal 170x140
Cable Management	Yes