EW7W3964LB



EN Washer Dryer

User Manual

Electrolux

CONTENTS

1. SAFETY INFORMATION....3
2. SAFETY INSTRUCTIONS....6
3. INSTALLATION....7
4. PRODUCT DESCRIPTION....11
5. CONTROL PANEL....11
6. DIAL AND BUTTONS....14
7. PROGRAMMES....17
8. SETTINGS....24
9. BEFORE FIRST USE....25
10. DAILY USE - WASHING ONLY....25
11. DAILY USE - WASHING & DRYING....29
12. DAILY USE - DRYING ONLY....31
13. FLUFF IN THE FABRICS....32
14. HINTS AND TIPS....32
15. CARE AND CLEANING....34
16. TROUBLESHOOTING....39
17. CONSUMPTION VALUES....43
18. TECHNICAL DATA....44
19. ACCESSORIES....44

WE'RE THINKING OF YOU

Thank you for purchasing an Electrolux appliance. You've chosen a product that brings with it decades of professional experience and innovation. Ingenious and stylish, it has been designed with you in mind. So whenever you use it, you can be safe in the knowledge that you'll get great results every time.
Welcome to Electrolux.
Visit our website for:

Get usage advice, brochures, trouble shooter, service information:
www.electrolux.com/webselfservice

Register your product for better service:
www.registerelectrolux.com

Buy Accessories, Consumables and Original spare parts for your appliance:
www.electrolux.com/shop

CUSTOMER CARE AND SERVICE

Always use original spare parts.
When contacting our Authorised Service Centre, ensure that you have the following data available: Model, PNC, Serial Number.
The information can be found on the rating plate.

⚠ Warning / Caution-Safety information

ⓘ General information and tips

Environmental information

Subject to change without notice.

1. ⚠ SAFETY INFORMATION

Before the installation and use of the appliance, carefully read the supplied instructions. The manufacturer is not responsible for any injuries or damages that are the result of incorrect installation or usage. Always keep the instructions in a safe and accessible location for future reference.

1.1 Children and vulnerable people safety

⚠ **WARNING!**
Risk of suffocation, injury or permanent disability.

- This appliance can be used by children aged from 8 years and above and persons with reduced physical, sensory or mental capabilities or lack of experience and knowledge if they have been given supervision or instruction concerning the use of the appliance in a safe way and understand the hazards involved.
- Children between 3 and 8 years of age and persons with very extensive and complex disabilities shall be kept away unless continuously supervised.
- Children of less than 3 years of age should be kept away unless continuously supervised.
- Do not let children play with the appliance.
- Keep all packaging away from children and dispose of it appropriately.
- Keep detergents away from children.
- Keep children and pets away from the appliance when the door is open.
- If the appliance has a child safety device, it should be activated.
- Children shall not carry out cleaning and user maintenance of the appliance without supervision.

1.2 General Safety

- Do not change the specification of this appliance.
- This appliance is intended to be used in household and similar applications such as:
  - staff kitchen areas in shops, offices and other working environments;
  - by clients in hotels, motels, bed & breakfast and other residential type environments;
  - areas for communal use in blocks of flats or in launderettes.
- The appliance shall be installed as a freestanding product or below the kitchen worktop if space margins permit.
- Do not install the appliance behind a lockable door, a sliding door or a door with a hinge on the opposite side, that would prevent the appliance door from being fully open.
- Connect the mains plug to the mains socket only at the end of the installation process. Make sure that the mains plug is accessible after installation.
- The ventilation opening in the base must not be covered by a carpet, mat, or any floor covering.
- WARNING: The appliance must not be supplied through an external switching device, such as a timer, or connected to a circuit that is regularly switched on and off by a utility.
- Ensure good air ventilation in the room where the appliance is installed to avoid the backflow of unwanted gases into the room from appliances burning gas or other fuels, including open fires.
- Exhaust air must not be discharged into a flue which is used for exhausting fumes from any appliances burning gas or other fuels.
- The operating water pressure at the water entry point from the outlet connection must be between 0.5 bar (0.05 MPa) and 8 bar (0.8 MPa).

- Do not exceed the maximum load of 9 kg (refer to the "Programme chart" chapter).
- The appliance must be connected to the water mains using the new supplied hose sets, or other new hose sets supplied by the Authorised Service Centre.
- Old hose sets must not be reused.
- If the mains power supply cable is damaged, it must be replaced by the manufacturer, its Authorised Service Centre or similarly qualified persons to avoid an electrical hazard.
- Wipe away lint or packaging debris that has accumulated around the appliance.
- Items that have been soiled with substances such as vegetable or mineral oil, acetone, alcohol, petrol, kerosene, spot removers, turpentine, waxes and wax removers should be washed separately with an extra amount of detergent before being dried in the washer dryer.
- Do not use the appliance if items have been soiled with industrial chemicals.
- Do not dry unwashed items in the wash dryer.
- Items such as foam rubber (latex foam), shower caps, waterproof textiles, and rubber backed articles and clothes, or pillows fitted with foam rubber pads should not be dried in the washer dryer.
- Fabric softeners, or similar products, should only be used as specified by the product manufacturer’s instructions.
- Remove all objects from items that could be a source of fire ignition such as lighters or matches.
- Never stop the washer dryer before the end of the drying cycle unless all items are quickly removed and separated so that residual heat can dissipate.
- The final part of the washer dryer cycle takes place without heat (cool down cycle) to ensure that items reach a temperature that will not cause damage to them.

- Do not use high pressure water sprays and/or steam to clean the appliance.
- Clean the appliance with a moist cloth. Use only neutral detergents. Do not use abrasive products, abrasive cleaning pads, solvents or metal objects.
- Before any maintenance operation, deactivate the appliance and disconnect the mains plug from the socket.

2. SAFETY INSTRUCTIONS

2.1 Installation

The installation must comply with relevant national regulations.

- Follow the installation instructions supplied with the appliance.
- Do not install or use the appliance where the temperature can be less than 0°C or where it is exposed to the weather.
- Always keep the appliance vertical when it is being moved.
- Make sure that there is air circulation between the appliance and the floor.
- Remove all the packaging and the transit bolts.
- The floor area on which the appliance is to be installed must be flat, stable, heat resistant and clean.
- Keep the transit bolts in a safe place. If the appliance is to be moved in the future they must be reattached to lock the drum to prevent an internal damage.
- Always take care when moving the appliance as it is heavy. Always use safety gloves and enclosed footwear.
- Do not install or use a damaged appliance.
- Do not install the appliance where the appliance door cannot be fully opened.
- Adjust the feet to have the necessary space between the appliance and the flooring.
- When the appliance is in its permanent position, check if it is levelled correctly with the aid of a spirit level. If it is not, adjust the feet accordingly.

2.2 Electrical Connection

WARNING!
Risk of fire and electric shock.

- The appliance must be earthed.
- Always use a correctly installed shockproof socket.
- Do not use multi-plug adapters and extension cables.
- Do not pull the mains cable to disconnect the appliance. Always pull the mains plug.
- Do not touch the mains cable or the mains plug with wet hands.
- This appliance complies with the E.E.C. Directives.

2.3 Water Connection

- Do not cause damage to the water hoses.
- Before connection to new pipes, pipes not used for a long time, where repair work has been carried out or new devices fitted (water meters, etc.), let the water flow until it is clean and clear.
- Ensure that there are no visible water leaks during and after the first use of the appliance.

2.4 Use

WARNING!
Risk of injury, electric shock, fire, burns or damage to the appliance.

- Do not put flammable products or items that are wet with flammable products in, near or on the appliance.
- Do not touch the glass door while a programme is in operation. The glass can get hot.
- Do not dry damaged (torn, frayed) items that contain padding or fillings.
- If laundry has been washed with a stain remover, carry out an additional rinse cycle before starting a drying cycle.
- Make sure that all metal objects are removed from the laundry.
- Only dry fabrics that are suitable to dry in the washer dryer. Follow the cleaning instruction on the item label.
- Plastic items are not heat resistant.
  - If a detergent ball is used, remove it before starting a drying programme.
  - Do not use a detergent ball if setting a non-stop programme.

WARNING!
Risk of injury or damage to the appliance.

- Do not sit or stand on the open door.
- Do not dry dripping wet clothes in the appliance.

2.5 Service

- To repair the appliance contact an Authorised Service Centre.
- Use original spare parts only.

2.6 Disposal

- Disconnect the appliance from the mains electrical and water supplies.
- Cut off the mains electrical cable close to the appliance and dispose of it.
- Remove the door catch to prevent children or pets from becoming trapped in the drum.
- Dispose of the appliance in accordance with local requirements for the disposal of Waste Electrical and Electronic Equipment (WEEE).

3. INSTALLATION

WARNING!
Refer to Safety chapters.

3.1 Unpacking

1. Remove the external film. If necessary, use a cutter.

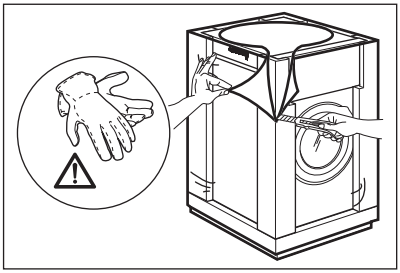

2. Remove the cardboard top and the polystyrene packaging materials.

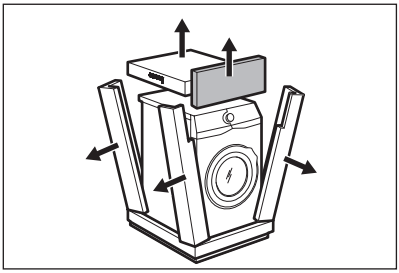

3. Open the door. Remove all the items from the drum .

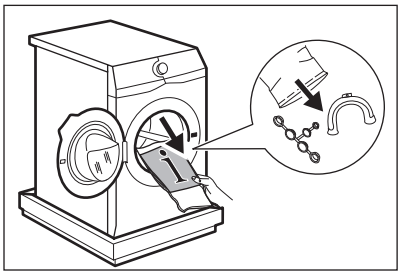

4. Put the front polystyrene packaging element on the floor under the appliance. Carefully put down the appliance onto its rear side.

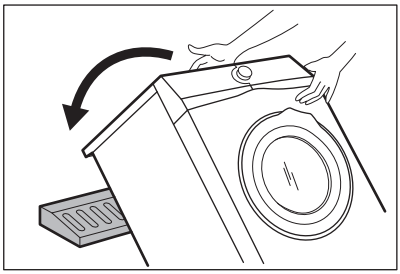

5. Remove the polystyrene protection from the bottom. Put the appliance back into an upright position.

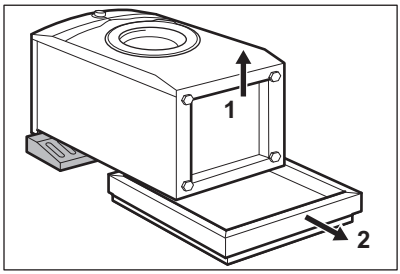

6. Remove the power supply cable and the drain hose from the hose holders.
It is possible to see water flowing from the drain hose. This is because the washing machine has been tested at the factory.

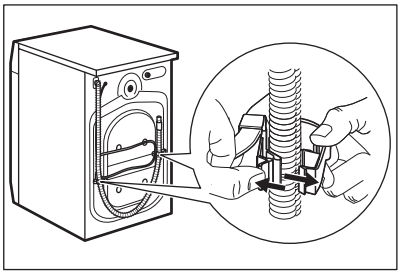

7. Remove the three transit bolts and pull out the plastic spacers.

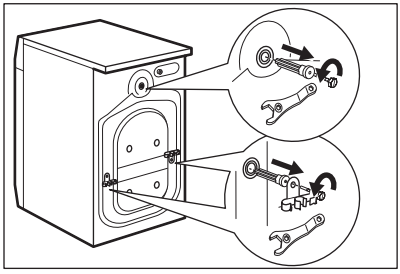

8. Put the plastic caps, that you find in the user manual bag, in the holes.

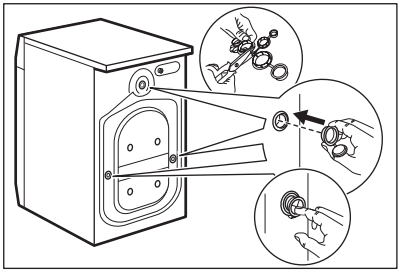

We recommend that you keep the packaging and the transit bolts for any transport of the appliance.

3.2 Information for installation

1. Positioning and levelling

Correctly adjusting the appliance so that it is level prevents vibration, noise and movement of the appliance when in operation.

1. Install the appliance on a flat hard floor. The appliance must be levelled and stable. Make sure that the appliance does not touch the wall or other units and

there is air circulation below the appliance.

2. Loosen or tighten the feet to adjust the level. All feet must rest firmly on the floor.

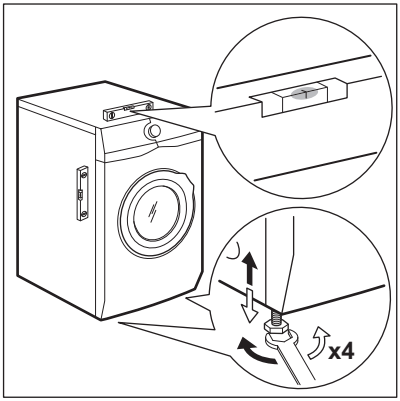

WARNING!
Do not put cardboard, wood or equivalent materials below the appliance feet to adjust the level.

2. The inlet hose

CAUTION!
Make sure there is no damage to hoses and there are no leaks from the couplings. Do not use an extension hose if the inlet hose is too short. Contact the service centre for a replacement inlet hose.

1. Connect the water inlet hose to the back of the appliance.

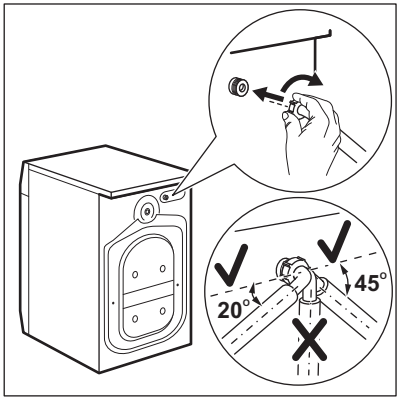

2. Position it toward left or right depending on the positon of the water tap. Make sure that the inlet hose is not in vertical position.

3. If necessary, loosen the ring nut to set it in the correct position.

4. Connect the water inlet hose to the cold water tap with 3/4" thread.

3. Water drainage

The drain hose should stay at a height of no less than 60 cm and not more than 100 cm.

You can extend the drain hose to maximum 400 cm. Contact the authorised service centre for the other drain hose and the extension.

It is possible to connect the drain hose in different ways:

1. Make a U shape with the drain hose and put it around the plastic hose guide.

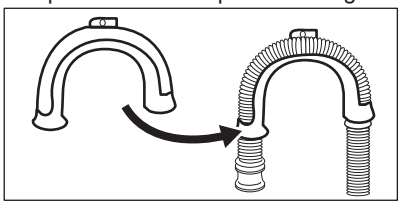

2. **On the edge of a sink** - Fasten the guide to the water tap or to the wall.

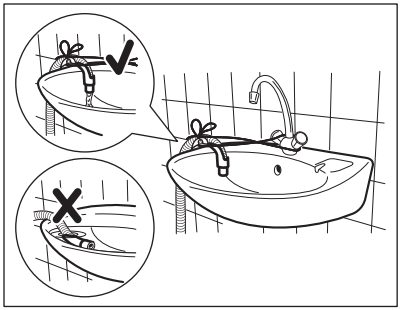

Make sure that the plastic guide cannot move when the appliance drains and the drain hose end is not immersed in the water. There may be a return of dirty water into the appliance.

3. If the end of the drain hose looks like this (see the picture), you can push it directly into the stand pipe.

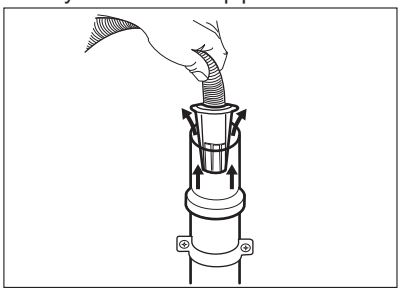

4. **To a stand pipe with vent-hole** - Insert the drain hose directly into a drain pipe. Refer to the illustration.

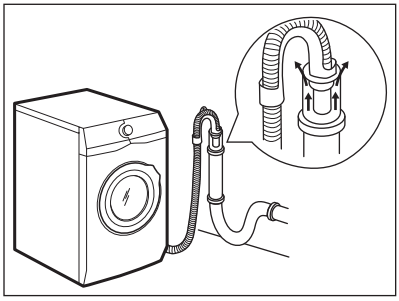

The end of the drain hose must always be ventilated , i.e. the inner diameter of the drain pipe (min. 38 mm - min. 1.5") must be larger than the external diameter of the drain hose.

5.**Without the plastic hose guide, to a sink spigot**- Put the drain hose in the spigot and tighten it with a clamp. Refer to the illustration.

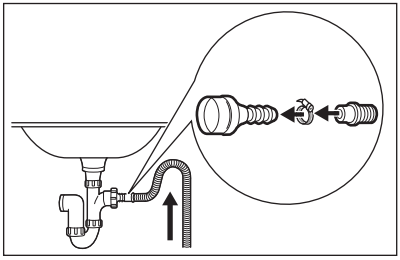

Make sure that the drain hose makes a loop to prevent particles going into the appliance from the sink.

6. Position the hose **directly to a built-in drain pipe in the room wall** and tighten it with a clamp.

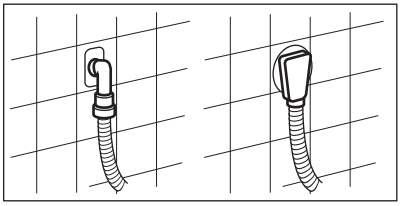

4. PRODUCT DESCRIPTION

4.1 Appliance overview

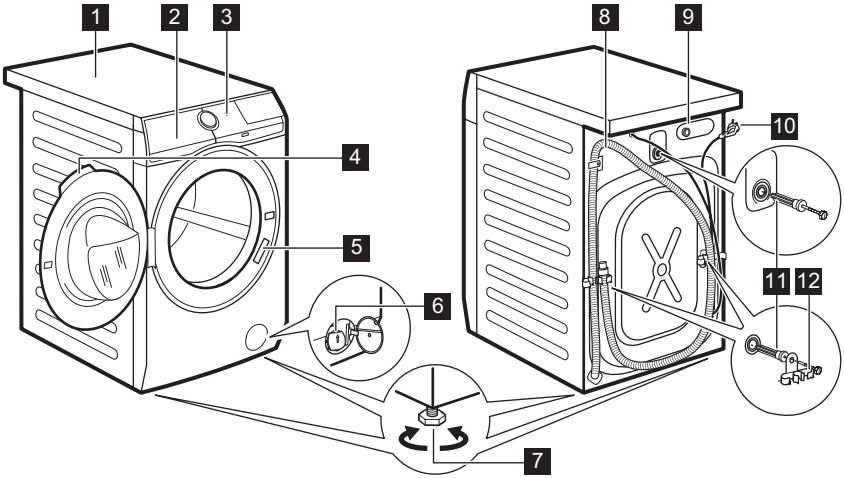

1 Worktop
2 Detergent dispenser
3 Control panel
4 Door handle
5 Rating plate
6 Drain pump filter
7 Feet for levelling the appliance
8 Drain hose
9 Inlet hose connection
10 Mains cable
11 Transit bolts
12 Hose support

5. CONTROL PANEL

5.1 Special features

Your new washer-dryer meets all modern requirements for effective treatment of laundry with low water, energy and detergent consumption and detergent consumption and proper care of fabric.

- **FreshScent System**, thanks to new **Freshscent** steam programme, offers the perfect solution for refreshing even the most delicate garments without washing. Use the delicate fragrance exclusively developed by **ELECTROLUX** to add a pleasant feeling of "just-washed" garment to the removing odours and wrinkles action.
- Thanks to the **Soft plus option**, the fabric softener is uniformly spread out in the laundry and deeply penetrates the fabric fibres favouring a perfect softness.
- The **SensiCare System** detects the laundry load size defining the programme duration in 30 seconds. The washing programme is tailored to the laundry load and the type of fabric without consuming more time, energy and water than necessary.

5.2 Control panel description

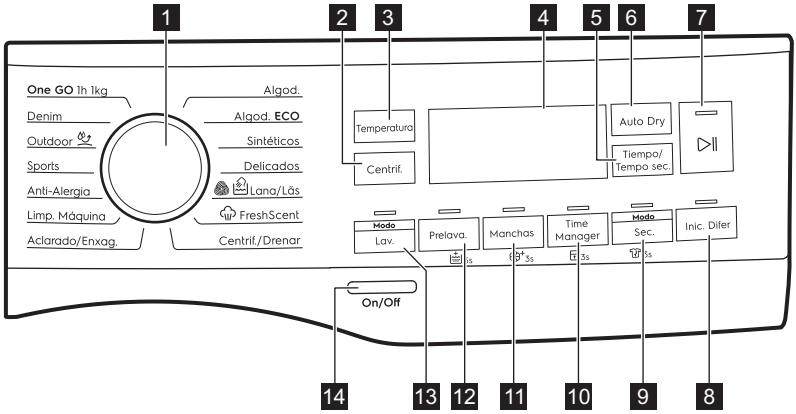

The permanent options are set by holding pressed the relative button for at least 3 seconds.

1. Programme dial
2. Centrif. touch button
3. Temperatura touch button
4. Display
5. Tiempo/Tempo sec. touch button
6. Auto Dry touch button
7. Inicio/Pausa touch button ▷‖
8. Inic.Difer touch button
9. Modo - Sec. touch button and permanent Anti-crease option 3s
10. Time Manager touch button and permanent Child Lock option 3s
11. Manchas touch button and permanent Soft Plus option 3s
12. Prelava. touch button and permanent Extra Rinse option 3s
13. Modo - Lav. touch button
14. On/Off push button

5.3 Display

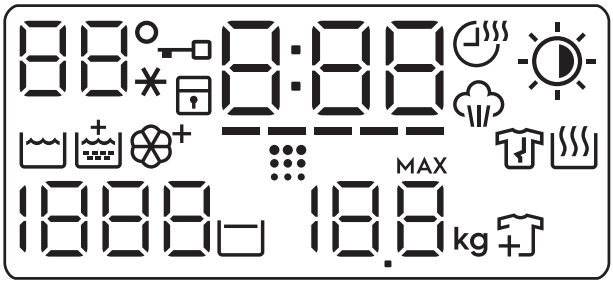

	The Temperature area: Temperature indicator . Cold water indicator.
	Door locked indicator.
	Child safety lock indicator.
	The digital indicator can show: • Programme duration (e. g. , washing and/or drying phase). • Delay time (e. g.). • Cycle end (). • Warning code (e.g.). • Error indicator (– – –).
	Time Manager indicator.
	Tiempo/Tempo sec. indicator.
	Steam phase indicator.
	Auto Dry indicator: Iron dry Cupboard dry Extra dry
	Washing phase indicator
	Extra Rinse indicator.
	Soft Plus indicator.
	Drum clean indicator. This is a recommendation to perform the drum cleaning.
	Anti-crease phase indicator.
	Drying phase indicator.
	The spin area: Spin speed indicator – – – No Spin indicator. Spin phase is off.
	Rinse Hold indicator.
	Maximum load indicator (refer to "The SensiCare System load detection " paragraph). **MAX** It flashes when the laundry load exceeds the maximum declared load of the selected programme.

	Add garments indicator. It lights at the beginning of the washing phase, when it is still possible to pause the appliance and add more laundry.

6. DIAL AND BUTTONS

6.1 Introduction

The options/functions are not available with all washing programmes. Check the compatibility between options/functions and washing programmes in the "Programme Chart". An option/function can exclude another one, in this case the appliance doesn't allow you to set incompatible options/functions.

6.2 On/Off

Press this button for a few seconds to activate or deactivate the appliance. Two different tunes sound while switching the appliance on or off.

As the Stand-by function automatically deactivates the appliance after several minutes to reduce the energy consumption, you may need to activate the appliance again.

For more details, refer to Stand-by paragraph in Daily Use chapter.

6.3 Temperatura

When you select a washing programme, the appliance automatically proposes a default temperature.

Touch this button repeatedly until the desired temperature value appears on the display.

When the display shows the indicators _ _*, the appliance does not heat the water.

6.4 Centrif.

When you set a programme, the appliance automatically sets the maximum spin speed allowed, except for programme Denim. With this option you can decrease the default spin speed.

Touch repeatedly this button to:

- **Decrease the spin speed.** The display shows only the spin speeds available for the set programme.
- Additional spin options **No Spin** – – –.
  Set this option to deactivate all spin phases. The appliance performs the only draining phase of the selected washing programme. Set this option for very delicate fabrics. The rinses phase uses more water for some washing programmes
- Activate the **Rinse Hold** option. The final spin is not performed. The water of the last rinse is not drained out to prevent the fabrics from creasing. The washing programme ends with water in the drum.
  The indicator is on display. The door stays locked and the drum turns regularly to reduce creasing. You must drain the water to unlock the door.
  If you touch the Inicio/Pausa button, the appliance performs the spinning phase and drains the water.

The appliance empties the water out automatically after 18 hours approximately.

6.5 Modo - Lav.

This button allows to activate or deactivate the washing mode. When the washing mode is activated, the button indicator is on.

6.6 Prelava.

With this option you can add a prewash phase to a washing programme.

The corresponding indicator above the touch button illuminates.

- Use this option to add a pre-wash phase at 30 °C before the washing phase.
  This option is recommended for heavily soiled laundry, especially if containing sand, dust, mud and other solid particles.

The options can increase the programme duration.

6.7 Permanent Extra Rinse 3s

With this option you can permanently have an extra rinse when you set a new programme.

To **activate/deactivate** this option, hold the Prelava. button pressed for 3 seconds until the indicator **comes on/ goes off** on the display.

When it is activated, the appliance will default to this option after you switch it off or change/reset the programme.

This option increases the programme duration.

6.8 Manchas

Touch this button to add the stain phase to a programme.

The corresponding indicator above the touch button illuminates.

Use this option for laundry with hard stains to remove.

When you set this option, put the stain remover into compartment .

This option increases the programme duration.
This option is not available with a temperature lower than 40 °C.

6.9 Permanent Soft Plus 3s

Set this option to optimise the fabric softener distribution and improve fabric softness.

Recommended when you use fabric softener.

To **activate/deactivate** this option , hold the Manchas button pressed for 3 seconds until the indicator **comes on/goes off** on the display.

When it is activated, the appliance will default to this option after you switch it off or change/reset the programme.

This option increases the programme duration.

6.10 Time Manager

With this option you can reduce the programme duration depending on the load size and the degree of soiling.

When you set a washing programme, the display shows the default duration and ––––– dashes.

Touch Time Manager button to reduce the programme duration according to your needs. The display shows the new programme duration and a number of dashes will decrease accordingly:

–––– suitable for a full load of normally soiled garments.

––– a quick cycle for a full load of lightly soiled garments.

–– very quick cycle for a smaller lightly soiled load (max. half load recommended).

– the shortest cycle to freshen up a small amount of laundry.

The Time Manager is available only with the programmes in the table.

indicator	Algod.	Algod.Eco	Sintéticos
––––– 1)	■	■	■
––––	■	■	■

indicator	Algod.	Algod.Eco	Sintéticos
–––	■	■	■
––	■	■	■
–	■	■	■

1) Default duration for all programmes.

Time Manager with steam programmes

When setting a steam programme, this button allows to chose three steam levels and the programme duration is reduced accordingly:

- ––– : maximum.
- –– : medium.
- – : minimum.

6.11 Child Lock 3s

With this option you can prevent children from playing with the control panel.

To **activate/deactivate** this option, hold the Time Manager button pressed until the indicator **comes on/goes off** on the display.

When it is activated, the appliance will default to this option after you switch it off or change/reset the programme. If you press any button, the indicator blinks to indicate that the buttons are disabled.

6.12 Modo - Sec.

This button allows to activate or deactivate the drying mode. When the drying mode is activated, the button indicator is on.

6.13 Permanent Anti-crease 3s

This option adds a short anti-crease phase at the end of the programme.

This phase reduces fabric creasing and facilitates the fabric ironing.

To **activate/deactivate** this option, hold the Modo - Sec. button pressed for 3 seconds until the indicator **comes on/goes off** on the display.

When it is activated, the appliance will default to this option after you switch it off or change/reset the programme.

This option can increase the programme duration.

6.14 Tiempo/Tempo sec.

Touch this button to set the time that suits the fabrics you have to dry (refer to "Timed drying" table). The display shows the set value.

Each time you touch this button the time value increases by 5 minutes.

You cannot set all time values for different types of fabrics.

6.15 Auto Dry

Touch this button to set one the automatic dryness levels proposed by the appliance.

On the display the relevant dryness indicator goes on:

- **Iron dry**: laundry to be ironed.
- **Cupboard dry**: laundry to be put in store.
- **Extra dry**: laundry to be fully dried.

You can not set all automatic levels for each type of fabrics.

6.16 Inic.Difer

With this option you can delay the start of a programme to a more convenient time.

Touch the button repeatedly to set the required delay. The time increases in steps of 1 hour up to 20 hours.

The display shows the indicator and the selected delay time. After touching the Inicio/Pausa button, the appliance begins the countdown and the door is locked.

6.17 Inicio/Pausa

Touch the Inicio/Pausa button to start, pause the appliance or interrupt a running programme.

7. PROGRAMMES

7.1 Programme Chart

Programme Default temperature Temperature range	Reference spin speed Spin speed range	Maximum load	Programme description (Type of load and soil level)
Washing programmes			
Algod. 40 °C 90 °C - Cold	1600 rpm (1600- 400 rpm)	9 kg	**White cotton and coloured cotton**. Normal, heavy and light soil.
Algod.Eco[1)] 40 °C 60 °C - 40 °C	1600 rpm (1600- 400 rpm)	9 kg	**White cotton and fast-coloured cotton**. Normal soil. The energy consumption decreases and the time of the washing programme is extended.
Sintéticos 40 °C 60 °C - Cold	1200 rpm (1200 - 400 rpm)	4 kg	**Synthetic items or mixed fabric items**. Normal soil.
Delicados 40 °C 40 °C - Cold	1200 rpm (1200- 400 rpm)	4 kg	**Delicate fabrics such as acrylics, viscose and mixed fabrics requiring gentler washing**. Normal soil.
Lana/Lãs 40 °C 40 °C - Cold	1200 rpm (1200 - 400 rpm)	1.5 kg	**Machine washable wool, hand washable wool and other fabrics** with «hand washing» care symbol[2)].

Programme Default temperature Temperature range	Reference spin speed Spin speed range	Maximum load	Programme description (Type of load and soil level)
Steam programme with FreshScent System Steam programme can be used for reducing wrinkles and odours[3] of garments that just need to be refreshed, avoiding washing. The fabric fibres are relaxed and afterwards ironing becomes effortless. When the programme is completed, quickly remove the laundry from the drum[4]. Steam programmes do not perform any hygienic cycle. Do not set one of these programmes with the following type of items: • Items that are not suitable for tumble drying. • All items with plastic, metal, wooden parts or alike. **ELECTROLUX fragrance**. If you use this special gentle fragrance, your laundry will scent as just washed: pour a single dose bottle in the compartment and simply start a steam programme. Reduce the fragrance dosage when treating smaller load. By means of the Time Manager button, you can reduce the programme duration when treating items labeled to be washed at low temperature. **DO NOT**: • Tumble dry the garments treated with fragrance. Its benefit would evaporate. • Use the fragrance with different purposes than those here described. • Use the fragrance on new garments. New garments may contain residual finishing compounds which are not compatible with it. The fragrance dose bottles are available on **ELECTROLUX** web shop or by authorised dealer.			
Freshscent	-	1.5 kg	**Cottons, Synthetics, Delicates.** Short and gentle steam programme to refresh even your very delicate garments, including very delicate garments with sequins, lace etc. When treating smaller loads, the programme duration can be further reduced by means of the Time Manager option. **WARNING!** Do not use this programme with wool and garments labelled as dry-clean only.
Centrif./Drenar	1600 rpm (1600 - 400 rpm)	9 kg	To spin the laundry and to drain the water in the drum. **All fabrics, except woollens and delicate fabrics**.

Programme Default temperature Temperature range	Reference spin speed Spin speed range	Maximum load	Programme description (Type of load and soil level)
Aclarado/ Enxag.	1600 rpm (1600- 400 rpm)	9 kg	**All fabrics, except woollens and very delicate fabrics.** Programme for rinsing and spinning the laundry. The default spin speed is the one used for cotton programmes. Reduce the spin speed accordingly to the type of laundry. If necessary, set the Extra Rinse option to add rinses. With a low spin speed, the appliance performs delicate rinses and a short spin.
Limp. Máquina 60 °C	1200 rpm (1200 - 400 rpm)	-	Maintenance cycle with hot water to clean and freshen the drum and to remove residue that may cause odour. For the best result use this cycle once a month. Before running this cycle, remove all items from the drum. In the washing phase compartment of the detergent dispenser, put the flap of the compartment in upward position. Pour a cup of chlorine bleach or a washing machine cleaner in the washing phase compartment. **DO NOT** use both together. ⓘ After the drum cleaning, run a further rinse cycle with empty drum and no detergent to remove any residue of bleach. If you set this programme with the Modo - Sec., the appliance performs the anti-fluff action. Refer to chapter 'Fluff in the fabrics'.
Anti-Alergia 60 °C	1600 rpm (1600 - 400 rpm)	9 kg	**White cotton items**. This programme removes micro-organisms thanks to a washing phase with the temperature maintained above 60°C for several minutes. This helps remove germs, bacteria, micro-organism and particles. An additional rinsing phase ensures a proper removal of detergent residues and pollens/allergenic items. In this way the wash is more effective.
Sports 30 °C 40 °C - Cold	1200 rpm (1200- 400 rpm)	4 kg	**Synthetic sport items**. This programme is designed to gently wash modern outdoor sportswear and is also suitable for gym, cycling or jogging clothes or similar.

Programme Default temperature Temperature range	Reference spin speed Spin speed range	Maximum load	Programme description (Type of load and soil level)
Outdoor 30 °C 40 °C - Cold	1200 rpm (1200- 400 rpm)	2 kg	Do not use fabric softener and make sure that there is no softener residue in the detergent dispenser. **Outdoor clothing, technical, sport fabrics, waterproof and breathable jackets, shell jackets with a removable fleece or inner insulation**. By performing a non-stop wash and dry programme, the drying phase also acts as water-repellent restorer. Make sure that the garment care label permits tumble drying.
Denim 30 °C 40 °C - Cold	1200 rpm (1200 - 400 rpm)	4 kg	**Special programme for Denim clothing with delicate washing phase to minimize colour fading and marks**. For better care a reduced load size is recommended.
One GO 1h 1kg 30 °C 40 °C - 30 °C	1200 rpm (1200 - 400 rpm)	1 kg	**Mixed fabrics (cotton and synthetic items)**. Complete short programme to wash and dry laundry loads up to 1 kg in one go. It only lasts 1 hour.
•	Reset position. The display shows dashes only.		

1) **Cottons energy saving programme**. This programme at 60ºC with a load of 9 kg is the reference programme for data entered in the energy label, in compliance with 96/60/EC Directive. Set this programme to have a good washing results and decrease the energy consumption. The time of the washing programme is extended.

2) During this cycle the drum rotates slowly to ensure a gentle wash. It can seem that the drum doesn't rotate or doesn't rotate properly, but this is normal for this programme.

3) Steam programme doesn't remove particularly intense odour.

4) After the steam treatment the laundry can be humid. Hang items out for a few minutes.

Programme options compatibility

Programme	Centrif.	– – – No Spin		Prelava.[1]	3s	Manchas[1]	3s	Time Manager	3s	Inic.Difer
Algod.	■	■	■	■	■	■	■	■	■	■
Algod.Eco	■	■	■	■	■	■	■	■	■	■
Sintéticos	■	■	■	■	■	■	■	■	■	■
Delicados	■	■	■	■	■	■	■		■	■
Lana/Lãs	■	■	■							■
Freshscent								■		■
Centrif./Drenar	■	■[2]								■
Aclarado/Enxag.	■	■	■		■				■	■
Limp. Máquina	■	■								■
Anti-Alergia	■	■	■	■	■	■	■		■	■
Sports	■	■	■	■	■				■	■
Outdoor	■	■	■		■				■	■
Denim	■	■	■		■		■		■	■
One GO 1h 1kg									■	■

1) Prelava. and Manchas cannot be selected together.

2) If you set the No Spin option, the appliance performs draining only.

7.2 Woolmark Apparel Care - Blue



- The wool wash cycle of this machine has been approved by The Woolmark Company for the washing of wool garments labelled as "hand wash" provided that the products are washed according to the instructions on the garment label and those issued by the manufacturer of this washing machine. M1230
- The wool drying cycle of this machine has been tested and approved by The Woolmark Company. The cycle is suitable to dry wool garments which are labelled "hand wash" provided that the garments are washed in a Woolmark endorsed hand washing cycle and dried according to the instructions issued by the manufacturer. M1224

In UK, Eire, Hong Kong and India the Woolmark symbol is a certification trademark.

7.3 Automatic drying

Dryness Level	Type of fabric	Load
☀-1) **Extra Dry** For towelling materials	**Cottons and Linen** (bathrobes, bath towels, etc)	up to 6 kg
	Denim garments	up to 4 kg

Dryness Level	Type of fabric	Load
☼1) **Cupboard Dry**[2)] For items to be stored	**Cottons and Linen** (bathrobes, bath towels, etc)	up to 6 kg
	Synthetics and mixed fabrics (jumpers, blouses, underwear, household and bed linen)	up to 4 kg
	Delicate fabrics (acrylics, viscose and delicate mixed fabrics)	up to 2 kg
	Wool items (woollen jumpers)	up to 1 kg
	Outdoor sporting garments (Outdoor clothing, technical, sport fabrics, waterproof and breathable jackets, shell jackets)	up to 2 kg
	Denim garments	up to 4 kg
	Sports	up to 4 kg
☼ **Iron Dry** Suitable for ironing	**Cottons and Linen** (sheets, tablecloths, shirts, etc)	up to 6 kg

1) Also available with Anti-Alergia and Algod.Eco programme.

2) **Hints for test institute** The test performance, in accordance with EN 50229, must be carried out with a FIRST drying load of the maximum declared drying capacity (load composition according to EN61121) by setting the AUTOMATIC CUPBOARD DRY for Algod.Eco programme. The SECOND drying load with the residual load must be tested by setting the AUTOMATIC CUPBOARD DRY for Algod.Eco programme.

7.4 Timed drying

Dryness Level	Type of fabric	Load (kg)	Spin speed (rpm)	Suggested duration (mins)
Extra Dry For towelling materials	**Cottons and Linen** (bathrobes, bath towels, etc)	6	1600	245 - 265
		4	1600	165 - 185
		2	1600	125 - 135
	Denim garments	4	1200	180

Dryness Level	Type of fabric	Load (kg)	Spin speed (rpm)	Suggested duration (mins)
Cupboard Dry For items to be stored	**Cottons and Linen** (bathrobes, bath towels, etc)	6	1600	235 - 255
		4	1600	155 - 175
		2	1600	115 - 125
	Synthetics and mixed fabrics (jumpers, blouses, underwear, household and bed linen)	4	1200	135 - 145
		1	1200	40 - 50
	Delicates (acrylics, viscose and delicate mixed fabrics)	2	1200	150
	Wool (woollen jumpers)	1	1200	110 - 130
	Outdoor sporting garments (Outdoor clothing, technical, sport fabrics, waterproof and breathable jackets, shell jackets)	2	1200	160
	Denim garments	4	1200	170
	Sports	4	1200	195
Iron Dry Suitable for ironing	**Cottons and Linen** (sheets, tablecloths, shirts, etc)	6	1600	170 - 190
		2	1600	105 - 125
		1	1600	75 - 85

8. SETTINGS

8.1 Acoustic signals

This appliance has different acoustic signals, that operate when:

- You activate the appliance (special short tune).
- You deactivate the appliance (special short tune).
- You touch the buttons (click sound).
- You make an invalid selection (3 short sounds).
- The programme is completed (sequence of sounds for about 2 minutes).
- The appliance has a malfunction (sequence of short sounds for about 5 minutes).

To **activate/deactivate** the acoustic signals when the programme is completed, touch the Lav. and the Prelava. buttons simultaneously for about 2 seconds. The display shows On or Off.



If you deactivate the acoustic signals, they continue to operate when the appliance has a malfunction.

9. BEFORE FIRST USE

1. Make sure that the electrical power is available and the water tap is open.
2. Pour 2 litres of water into the detergent compartment marked by II.

This action activates the drain system.

3. Pour a small quantity of detergent into the compartment marked by II.
4. Set and start a programme for cotton at the highest temperature without any laundry in the drum.

This removes all possible dirt from the drum and the tub.

10. DAILY USE - WASHING ONLY

WARNING!
Refer to Safety chapters.

10.1 Activating the appliance

1. Connect the mains plug to the mains socket.
2. Open the water tap.
3. Press the On/Off button for a few seconds to activate the appliance.

A short tune sounds.

10.2 Loading the laundry

1. Open the appliance door.
2. Shake the items before you put them in the appliance.
3. Put the laundry in the drum, one item at a time.

Do not put too much laundry in the drum.

4. Close the door firmly.

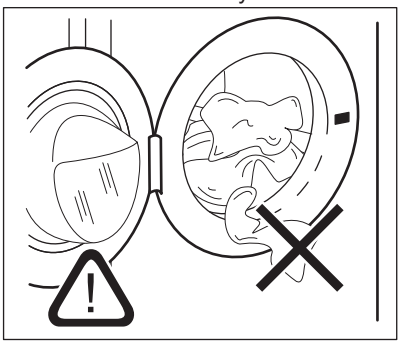

CAUTION!
Make sure that no laundry gets caught between the seal and the door to avoid risk of water leakage and damage to the laundry.

Washing heavily oiled, greasy stains could cause damage to rubber parts of the washing machine.

10.3 Filling the detergent and additives

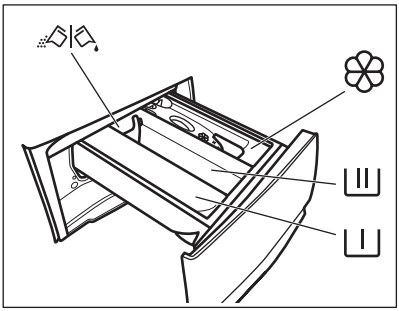

I - Compartment for prewash phase, soak programme or stain remover.

II - Compartment for washing phase.

❀ - Compartment for fabric softener and other liquid treatments(fabric conditioner, starch).
MAX - Maximum level for quantity of liquid additives.
- Flap for powder or liquid detergent.

Always follow the instructions that you find on the packaging of the detergent products, but we recommend that you do not exceed the maximum indicated level (**MAX**). This quantity will however guarantee the best washing results.

After a washing cycle, if necessary, remove any detergent residue from the detergent dispenser.

10.4 Check the position of the detergent flap

1. Pull out the detergent dispenser until it stops.

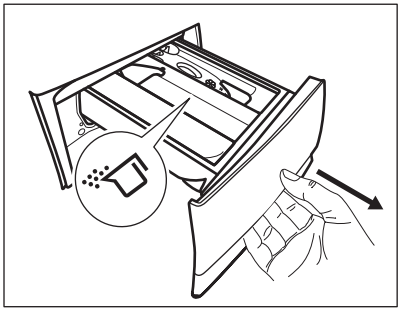

2. Press the lever down to remove the dispenser.
3. To use powder detergent, turn the flap up.
4. To use liquid detergent, turn the flap down.

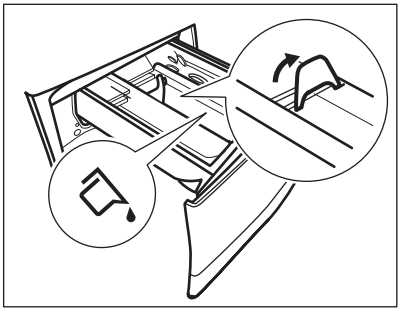

With the flap in the position **DOWN**:
- Do not use gelatinous or thick liquid detergents.
- Do not exceed to liquid detergent dose indicated on the flap.
- Do not set the prewash phase.
- Do not set the delay start function.

5. Measure out the detergent and the fabric conditioner.
6. Carefully close the detergent dispenser.

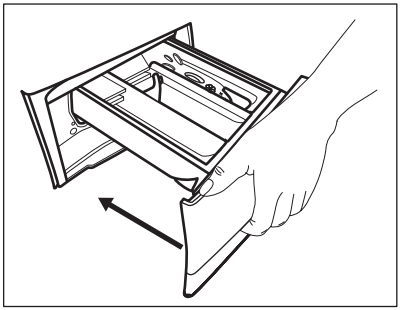

Make sure that the flap does not cause a blockage when you close the drawer.

10.5 Setting a programme

1. Turn the programme dial to select the desired washing programme.

The indicator of Modo - Lav. button illuminates.

The indicator of the Inicio/Pausa ▷‖ button flashes.
The display shows an indicative programme duration and the maximum load.

2. To change the temperature and/or the spin speed, touch the related buttons.
3. If desired, set one or more options by touching the related buttons. The

related indicators illuminate on the display and the given information changes accordingly.

If a selection is **not possible** an acoustic signal sounds and the display shows – – –.

10.6 Starting a programme

Touch the Inicio/Pausa ▷‖ button to start the programme. It is not possible to start the programme when the indicator of the button is off and doesn't flash (e.g. the door is open).
The related indicator stops flashing and stays on.
The programme starts, the door is locked. The display shows the indicator ⊶▯.

The drain pump can operate shortly before the appliance fills water.

10.7 Starting a programme with the delay start

1. Touch the Inic.Difer button repeatedly until the display shows the desired delay time. On the display the indicator shows ◷.

2. Touch the Inicio/Pausa ▷‖ button. The appliance door locks and starts the countdown of the delay start. The display shows the indicator ⊶▯.
When the countdown is completed, the programme starts automatically.

Cancelling the delay start after the countdown has started

To cancel the delay start:

1. Touch the Inicio/Pausa ▷‖ button to pause the appliance. The related indicator flashes.
2. Touch the Inic.Difer button repeatedly until the display shows ▯ and the indicator ◷ goes off.
3. Touch the Inicio/Pausa ▷‖ button again to start the programme immediately.

Changing the delay start after the countdown has started

To change the delay start:

1. Touch the Inicio/Pausa ▷‖ button to pause the appliance. The related indicator flashes.
2. Touch the Inic.Difer button repeatedly until the display shows the desired delay time.
3. Touch the Inicio/Pausa ▷‖ button again to start the new countdown.

10.8 The SensiCare System load detection

The programme duration in the display is referred to a **medium/high load**.

After touching the Inicio/Pausa ▷‖ button, the maximum declared load indicator goes off, the SensiCare System starts the laundry load detection:

1. The appliance detects the load in the first 30 seconds. During this phase the Time Manager bars ‾‾‾‾ placed below the time digits play a simple animation, the drum rotates shortly.
2. The programme duration will be adjusted accordingly and could increase or decrease. After further 30 seconds, the water filling starts.

At the end of the load detection, **in case of drum overload**, the indicator **MAX** is flashing in the display:

In this case, for 30 seconds, it is possible to pause the appliance and remove the exceeding garments.

Once removed the exceeding garments, touch the Inicio/Pausa ▷‖ button to start the programme again. The SensiCare phase can be repeated up to three times (see point 1).

Important! If the laundry amount will not be reduced, the washing programme starts anyway, despite the overload. In this case, it will be not possible to guarantee the best washing results.

About 20 minutes after the programme start, the programme duration could be adjusted again depending on the capacity of water absorption of the fabrics.

The SensiCare detection is carried out with complete washing programmes only and if the programme duration has not been reduced by means of the Time Manager button.

10.9 Interrupting a programme and changing the options

When the programme is running, you can change **only some** options:

1. Touch the Inicio/Pausa ▷‖ button.

The related indicator flashes.

2. Change the options. The given information in the display changes accordingly.
3. Touch the Inicio/Pausa ▷‖ button again.

The washing programme continues.

To start the programme again make sure that the programme dial is correctly positioned on the interrupted programme and the indicator of the Inicio/Pausa ▷‖ button is flashing.

10.10 Cancelling a running programme

1. Press the button On/Off to cancel the programme and to deactivate the appliance.
2. Press the button On/Off again to activate the appliance.

If the SensiCare System has completed and the water filling has already started, the new programme starts **without repeating the SensiCare System**. The water and the detergent are not drained out in order to avoid waste. The display shows the maximum duration of the programme, updating it about 20 minutes after the starting of the new programme.

There is also an alternative way of cancelling:

1. Rotate the selector knob to the "Reset" position • .
2. Wait for 1 second. The display shows ––– .

Now, you can set a new washing programme.

10.11 Opening the door - Adding garments

If the temperature and level of the water in the drum are too high and/or the drum is still rotating you cannot open the door.

While a programme or the delay start operates, the appliance door is locked.

1. Touch the button Inicio/Pausa ▷‖.

In the display the related door lock indicator goes off.

2. Open the appliance door. If necessary, add or remove the items.
3. Close the door and touch the Inicio/Pausa ▷‖ button.

The programme or the delay start continues.

10.12 End of the programme

When the programme has finished, the appliance stops automatically. The acoustic signals operate (if they are active). The display shows 0:00

The indicator of the Inicio/Pausa button goes off.

The door unlocks and the indicator goes off.

1. Press button On/Off to deactivate the appliance.

After five minutes from the end of the programme, the energy saving function automatically deactivates the appliance.

When you activate the appliance again, the display shows the end of the previous programme. Turn the programme dial to set a new cycle.

2. Remove the laundry from the appliance.
3. Make sure that the drum is empty.
4. Keep the door and the detergent dispenser slightly ajar to prevent mildew and odours.
5. Close the water tap.

10.13 Draining water out after end of cycle

If you have chosen a programme or an option that does not empty out the water of the last rinse, the programme is completed, but:

- The time area shows 0:00 and the display shows the door locked.
- The indicator of the Inicio/Pausa button starts flashing.
- The drum still turns at regular intervals to prevent creases in the laundry.
- The door stays locked.
- You must drain the water to open the door:

1. If necessary, touch the Centrif. button to decrease the spin speed proposed by the appliance.
2. Press the Inicio/Pausa button: the appliance drains the water and spins.

The option indicator Rinse Hold disappears.

If you have selected No Spin – – –, the appliance will only drain the water.

3. When the programme is completed and the door locked indicator goes off, you can open the door.
4. Press the On/Off button for a few seconds to deactivate the appliance.

10.14 Stand-by function

The Stand-by function automatically deactivates the appliance to reduce the energy consumption when:

- You do not use the appliance for 5 minutes when no programme is running.
  Press the button On/Off to activate the appliance again.
- 5 minutes after the end of the washing programme.
  Press the On/Off button to activate the appliance again.
  The display shows the end of the last programme.
  Turn the programme dial to set a new cycle.

If the dial is rotated to the "Reset" position • , the appliance automatically turns off in 30 seconds.

If you set a programme or an option that ends with water in the drum, the Stand-by function **doesn't deactivate** the appliance to remind you to drain the water.

11. DAILY USE - WASHING & DRYING

WARNING!
Refer to Safety chapters.

This appliance is an automatic washer dryer.

11.1 NON-STOP programme - Wash and dry

Not all programmes are compatible with drying function. The One GO 1h 1kg programme is already a complete wash&dry programme.

You can wash and dry your laundry setting a «non stop-programme». Proceed as follows:

1. Press the On/Off button for some seconds to activate the appliance.
2. Load the laundry one item at a time.
3. Put the detergent and the additives in the appropriate compartment.
4. Turn the programme dial to the washing programme. The appliance defaults to the washing only mode and the indicator of the Modo - Lav. button is on. The display shows the default temperature and spin. If necessary, change them according to your laundry. The display also shows the maximum recommended load for washing phase.
5. Set the desired options, if there are available.
6. Tap on the Modo - Sec. button to activate also the drying function. Both indicators of the Modo - Lav. and Modo - Sec. buttons are on. The indicators and appear on the display. The display also shows the maximum recommended load for a washing and drying programme (e.g. 6 kg for cottons).

11.2 Washing and Drying - Automatic levels

1. Tap on the Auto Dry button repeatedly until the display shows the required dryness level. The indicators in the display illuminate accordingly:
   a. **Iron dry**: for cotton items;
   b. **Cupboard dry**: for cotton and synthetic items;
   c. **Extra dry**: for cotton items.

The time value on the display is the duration of both cycles washing and drying, calculated on a default load size.

To have a good drying by using less energy and in a shorter time, the appliance does not let you set a too low spin speed for the items to be washed and dried.

2. Touch button Inicio/Pausa to start the programme. The SensiCare estimation starts.

In the display the door locked indicator comes on.
The display also shows the remaining programme time.

11.3 Washing and Timed Drying

1. Tap on the Tiempo/Tempo sec. button repeatedly to set the desired time value (see the "Timed drying" table the "Programmes" chapter).
   The drying level indicator goes off and the indicator comes on.

Each time you tap on this button the time value increases by 5 minutes. The display shows the set new time value.

2. Touch the Inicio/Pausa button to start the programme. The SensiCare estimation starts.

In the display the door locked indicator comes on.
The display also shows the remaining programme time.

11.4 At the end of the drying programme

- The appliance stops automatically.
- The acoustic signals operate (if they are active).
- In the display comes on.
- The indicator of button Inicio/Pausa goes off. The door locked goes off.
  The appliance continues to operate with the anti-crease phase for approximately 30 minutes or more if Anti-crease option was set.

The anti-crease phase reduces creasing.
You can remove the laundry before the anti-crease phase is completed. We recommend, for better results, that you remove the laundry when the phase is almost completed or completed. The indicator remains lit.

- Press the button On/Off for some seconds to deactivate the appliance.

After some minutes from the end of the programme, the energy saving function deactivates the appliance automatically.

1. Remove the laundry from the appliance.
2. Make sure that the drum is empty.

After drying phase, clean the drum, the seal and the inside of the door with a wet cloth.

12. DAILY USE - DRYING ONLY

WARNING!
Refer to Safety chapters.

This appliance is an automatic washer dryer.

12.1 Preparation to drying

1. Press the On/Off button for some seconds to activate the appliance.
2. Load the laundry one item at a time.
3. Turn the programme dial to the programme suitable for the items to dry. The appliance defaults to the washing only mode and the indicator of the Modo - Lav. button is on.
4. Tap on the Modo - Sec. button and then on the Modo - Lav. button to perform drying only. The indicator of Modo - Sec. button illuminates and the indicator of Modo - Lav. button goes off. The indicators and appear on the display and the indicator disappears.

When drying a big amount of laundry, to have good drying performances, make sure that the laundry itself is not rolled up and that is uniformly distributed in the drum.

12.2 Drying - Automatic levels

1. Tap on the Auto Dry button repeatedly until the display shows the required dryness level. The indicators in the display illuminate accordingly:
   a. **Iron dry**: for cotton items;
   b. **Cupboard dry**: for cotton and synthetic items;
   c. **Extra dry**: for cotton items.

The display shows the drying programme duration.

2. Touch the Inicio/Pausa button to start the programme.

In the display the door locked indicator comes on.
The display also shows the remaining programme time.

12.3 Timed Drying

1. Tap on the Tiempo/Tempo sec. button repeatedly to set the desired time value (see the "Timed drying" table the "Programmes" chapter).
   The drying level indicator goes off and the indicator comes on.

Each time you tap on this button the time value increases by 5 minutes. The display shows the set new time value.

2. Touch the Inicio/Pausa ▷‖ to start the programme.

In the display the door locked ⊸▯ indicator comes on.
The display also shows the remaining programme time.

12.4 At the end of the drying programme

- The appliance stops automatically.
- The acoustic signals operate (if they are active).
- In the display 0:00 comes on.
- The indicator of button Inicio/Pausa goes off. The door locked ⊸▯ goes off.
  The appliance continues to operate with the anti-crease phase for approximately 30 minutes or more if Anti-crease option was set.
  The anti-crease phase reduces creasing.
  You can remove the laundry before the anti-crease phase is completed. We recommend, for better results, that you remove the laundry when the phase is almost completed or completed. The indicator 👕 remains lit.
- Press the button On/Off for some seconds to deactivate the appliance.

ⓘ After some minutes from the end of the programme, the energy saving function deactivates the appliance automatically.

1. Remove the laundry from the appliance.
2. Make sure that the drum is empty.

ⓘ After drying phase, clean the drum, the seal and the inside of the door with a wet cloth.

13. FLUFF IN THE FABRICS

During the washing and/or drying phase, some types of fabric, (sponge, wool, sweatshirt) could release fluff.

The released fluff could stick to the fabrics during the next cycle.

This inconvenient increases with technical fabrics.

To prevent the fluff in your laundry, we recommend that you:

- To do not wash dark fabrics after you washed and dried light coloured fabrics (hand towel, wool, sweatshirt) and the contrary.
- To dry this type of fabrics at open air when they are washed the first time.
- To clean the drain filter.
- After the drying phase, clean the empty drum, the gasket and the door with a wet cloth.

To remove the fluff inside the drum, set a special programme:

- Empty the drum.
- Clean the drum, the gasket and the door with a wet cloth.
- Set the Limp. Máquina programme and the Modo - Sec. together to activate the anti-fluff action.
- Touch the Inicio/Pausa ▷‖ button to start the programme.

ⓘ If the appliance is frequently used, carry out the cleaning programme regularly.

14. HINTS AND TIPS

⚠ **WARNING!**
Refer to Safety chapters.

14.1 The laundry load

- Divide the laundry into: white, coloured, synthetics, delicates and wool.
- Follow the washing instructions on the laundry care labels.
- Do not wash white and coloured items together.
- Some coloured items can discolour with the first wash. We recommend that you wash them separately for the first couple of times.
- Button up pillowcases, close zippers, hooks and poppers. Tie up belts.
- Empty pockets and unfold.
- Turn multilayered fabrics, wool and items with printed illustrations inside out.
- Pre-treat tough stains.
- Wash heavy soil stains with a special detergent.
- Be careful with curtains. Remove the hooks and put the curtains in a washing bag or pillowcase.
- Do not wash laundry without hems or with cuts.
- Use a washing bag to wash small and/or delicate items (e.g. underwired bras, belts, tights, etc.).
- A very small load can cause balance problems with the spin phase leading to excessive vibration. If this occurs:
  a. interrupt the programme and open the door (refer to "Daily Use" chapter);
  b. manually redistribute the load so that the items are spaced evenly around the tub;
  c. press the Inicio/Pausa button. The spin phase continues.

14.2 Stubborn stains

For some stains, water and detergent is not sufficient.

We recommend that you pre-treat these stains before you put the items in the appliance.

Special stain removers are available. Use the special stain remover that is applicable to the type of stain and fabric.

14.3 Detergents and other treatments

- Only use detergents and other treatments specially made for washing machines:
  – powder detergents for all types of fabric, excluding delicate. Prefer powder detergents containing bleach for whites and laundry sanitization
  – liquid detergents, preferably for low temperature wash programmes (60 °C max) for all types of fabric, or special ones for woollens only.
- Do not mix different types of detergents.
- To help the environment, do not use more than the recommended quantity of detergent.
- Follow the instructions that you find on packaging of the detergents or other treatments without exceeding the indicated maximum level (**MAX**).
- Use the recommended detergents for the type and colour of the fabric, the programme temperature and the level of soil.

14.4 Ecological hints

- Set a programme without the prewash phase to wash laundry with normal soil.
- Always start a washing programme with the maximum load of laundry allowed.
- If you pre-treat the stains or use a stain remover, set a programme with a low temperature.
- To use the correct quantity of detergent, check the water hardness of your domestic system. Refer to "Water hardness".

14.5 Water hardness

If the water hardness in your area is high or moderate, we recommend that you use a water softener for washing machines. In areas where the water hardness is soft it is not necessary to use a water softener.

To find out the water hardness in your area, contact your local water authority.

Use the correct quantity of water softener. Follow the instructions that you find on the packaging of the product.

14.6 Drying hints

Prepare the drying cycle
- Open the water tap.
- Check if the drain hose is connected properly. Refer to installation chapter for more information.
- For the maximum laundry load of the drying programmes, refer to the drying programmes table.

14.7 Items not suitable for drying

Do not set a drying programme for this laundry:
- Synthetic curtains.
- Pieces of clothing with metal inserts.
- Nylon stockings.
- Quilts.
- Bed covers.
- Duvets.
- Anoraks.
- Sleeping bags.
- Fabrics with residue of hair sprays, nail solvents or similar.
- Garments with foam-rubber or materials similar to foam-rubber.

14.8 Garment labels

When you dry the laundry, obey the indications on the labels of the manufacturers:

- = The item can be tumble dried
- = The drying cycle is at high temperature
- = The drying cycle is at reduced temperature
- = The item can not be tumble dried.

14.9 Drying cycle duration

The drying time can change depending on:
- speed of the last spin
- dryness level
- type of laundry
- weight of the load

14.10 Additional drying

If, at the end of the drying programme, the laundry is still damp, set a short drying cycle again.

WARNING!
To avoid creasing and shrinkage do not overdry the laundry.

14.11 General Tips

Refer to the «Drying programmes» table to find the **average** drying times. Experience will help you to dry the laundry better. Take note of the duration of the cycles done before.

To avoid the static charge at the end of the drying cycle:

1. Use fabric conditioner in the washing cycle.
2. Use special fabric conditioner for tumble dryers.

When the drying programme is completed remove the laundry promptly.

15. CARE AND CLEANING

WARNING!
Refer to Safety chapters.

CAUTION!
Do not use alcohol, solvents or chemical products.

15.1 External cleaning

Clean the appliance with mild soap and warm water only. Fully dry all the surfaces.

CAUTION!
Do not clean the metal surfaces with chlorine-based detergent.

15.2 Descaling

If the water hardness in your area is high or moderate, we recommend that you use a water descaling product for washing machines.

Regularly examine the drum to check for limescale.

Regular detergents already contain water softening agents, but we recommend to run a cycle with an empty drum and a descaling product occasionally.

Always follow the instructions that you find on the packaging of the product.

15.3 Maintenance wash

The repeated and prolonged use of low temperature programmes can cause detergent deposits, fluff residues, bacterial growth inside the drum and the tub. This could generate bad odours and mildew. To eliminate these deposits and clean the inner part of the appliance, run a maintenance wash regularly (at least once a month).

Refer to Cleaning the drum chapter.

15.4 Door seal

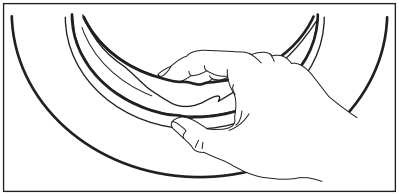

Regularly examine the seal and remove all objects from the inner part.

15.5 Cleaning the drum

Regularly examine the drum to prevent rust forming.

Clean the drum with special products for stainless steel.

Always follow the instructions that you find on the packaging of the product.

For a thorough clean:

- Remove all laundry from the drum.
- Run the Limp. Máquina programme . For more details, refer to washing programme table.

Occasionally, at the end of a cycle the display may show the icon : this is a recommendation to perform the “drum cleaning”.

15.6 Cleaning the detergent dispenser

To prevent possible deposits of dried detergent or clotted fabric softener and/or formation of mould in the detergent dispenser drawer, once in a while carry out the following cleaning procedure:

1. Open the drawer. Press the catch downwards as indicated in the picture and pull it out.

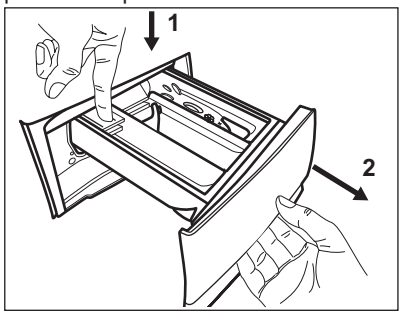

2. Remove the top part of the additive compartment to aid cleaning and

flush it out under running warm water, to remove any traces of accumulated detergent. After cleaning, put the top part back into position.

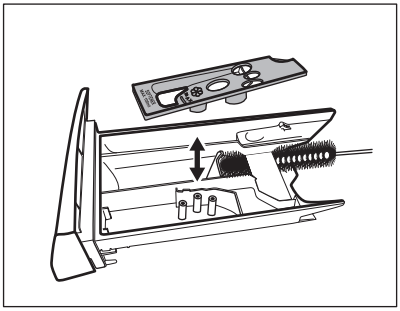

3. Make sure that all detergent residue is removed from the upper and lower part of the recess. Use a small brush to clean the recess.

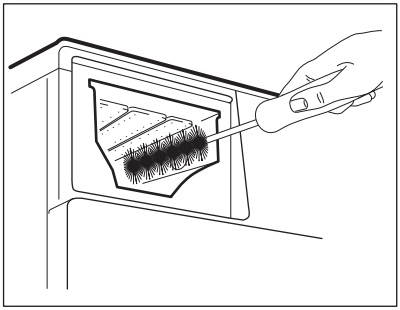

4. Insert the detergent drawer into the guide rails and close it. Run the rinsing programme without any clothes in the drum.

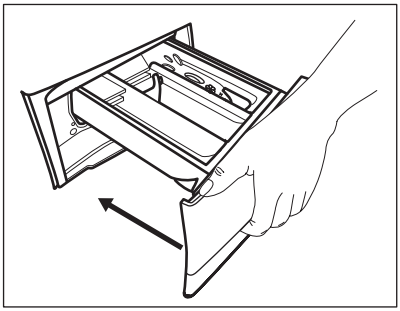

15.7 Cleaning the drain pump

WARNING!
Disconnect the mains plug from the mains socket.

Regularly check the drain pump filter and make sure that it is clean.

Clean the drain pump if:
- The appliance does not drain the water.
- The drum does not turn.
- The appliance makes an unusual noise because of the blockage of the drain pump.
- The display shows the alarm code E20.

WARNING!
- Do not remove the filter while the appliance operates.
- Do not clean the pump if the water in the appliance is hot. Wait until the water cools down

Proceed as follows to clean the pump:

1. Open the pump cover.

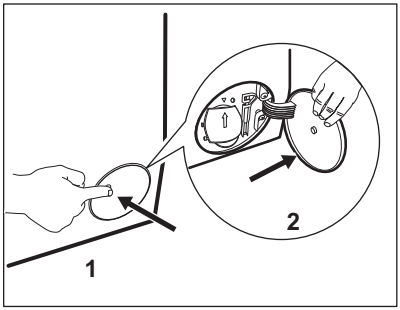

2. Place a suitable bowl below the drain pump access to collect the water that flows out.
3. Open the chute downwards. Always keep a rag nearby to dry up any water spillages when removing the filter.

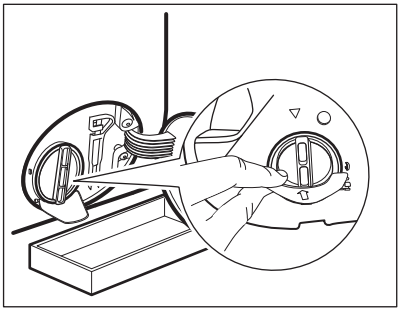

4. Turn the filter 180 degrees in anti-clockwise direction to open it, without removing. Let the water flow out.

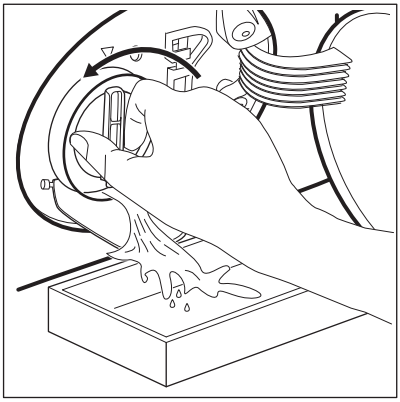

5. When the bowl is full of water, turn the filter back and empty the container.
6. Repeat the steps 4 and 5 until the water stops to flow out.
7. Turn the filter anti-clockwise to remove it.

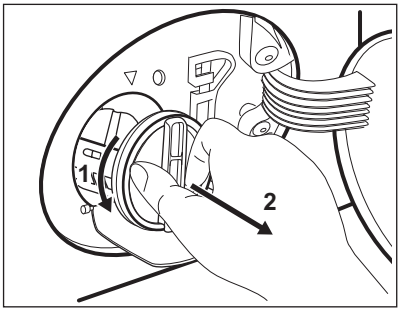

8. If it is necessary, remove fluff and objects from the filter recess.
9. Make sure that the impeller of the pump can rotate. If it does not rotate, contact the Authorised Service Centre.

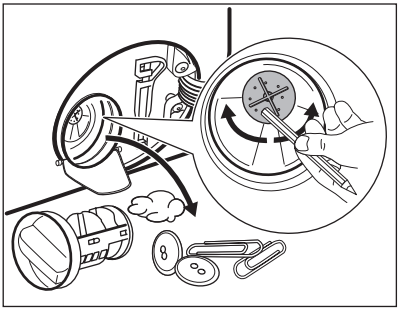

10. Clean the filter under the water tap.

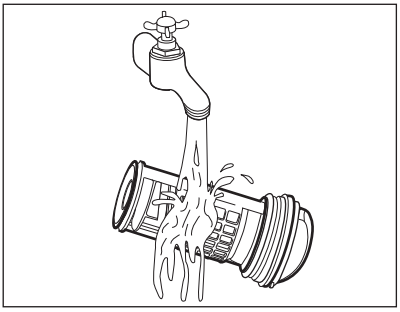

11. Put the filter back into the special guides by turning it clockwise. Make sure that you tighten the filter correctly to prevent leakages.

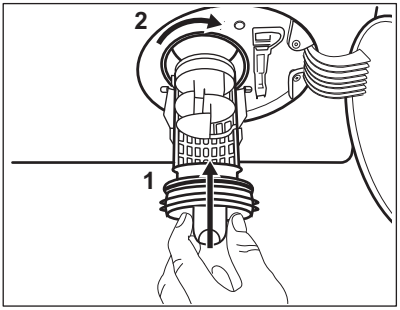

12. Close the pump cover.

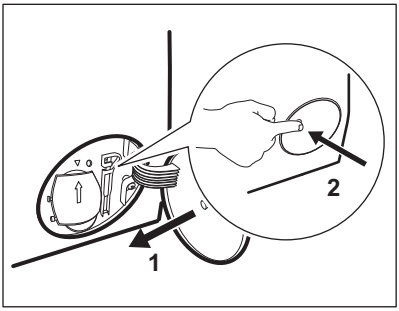

When you drain the water with the emergency drain procedure, you must activate the drain system again:

a. Put 2 litres of water in the main wash compartment of the detergent dispenser.
b. Start the programme to drain the water.

15.8 Cleaning the inlet hose and the valve filter

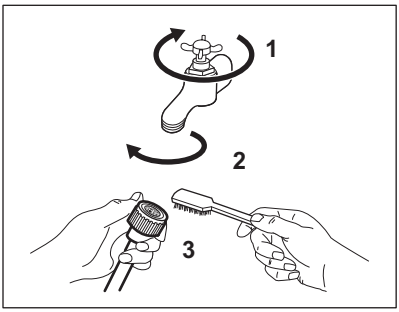

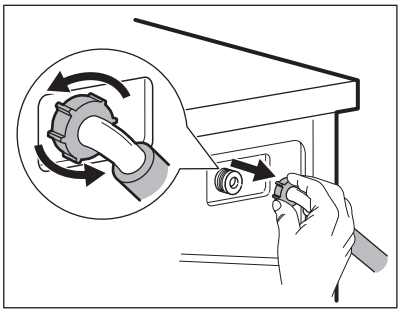

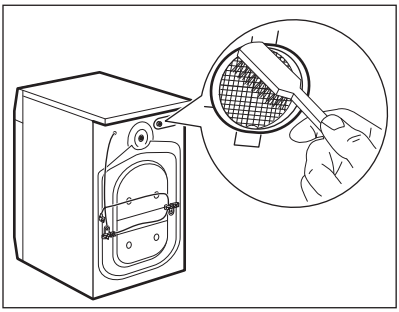

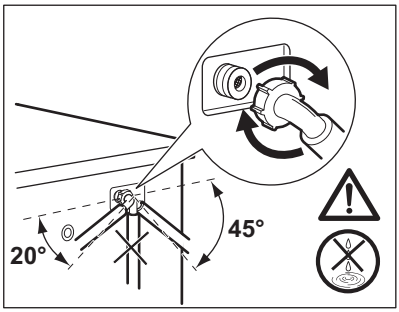

15.9 Emergency drain

If the appliance cannot drain the water, carry out the same procedure, described in 'Cleaning the drain pump' paragraph. If necessary, clean the pump.

When you drain the water with the emergency drain procedure, you must activate the drain system again:

1. Put 2 litres of water in the main wash compartment of the detergent dispenser.
2. Start the programme to drain the water.

15.10 Frost precautions

If the appliance is installed in an area where the temperature can reach values around 0° C or drop below, remove the remaining water from the inlet hose and the drain pump.

1. Disconnect the mains plug from the mains socket.
2. Close the water tap.
3. Put the two ends of the inlet hose in a container and let the water flow out of the hose.

4. Empty the drain pump. Refer to the emergency drain procedure.
5. When the drain pump is empty, install the inlet hose again.

WARNING!
Make sure that the temperature is higher than 0 °C before you use the appliance again.
The manufacturer is not responsible for damages caused by low temperatures.

16. TROUBLESHOOTING

WARNING!
Refer to Safety chapters.

16.1 Introduction

The appliance does not start or it stops during operation.

First try to find a solution to the problem (refer to the table). If the problem persists, contact the Authorised Service Centre.

In case of major problems, the acoustic signals operate, the display shows an alarm code and the Inicio/Pausa **button may flash continuously:**

- EH0 - The mains supply is unstable. Wait until the mains supply is stable.
- E91 - No communication between electronic elements of the appliance. Switch it off and switch on again. The programme was not finished properly or the appliance stopped too early. If the alarm code appears again, contact the Authorised Service Centre.
- E 10 - The appliance does not fill with water properly. After the proper check, start the appliance again by pressing Inicio/Pausa button the appliance tries to resume the cycle . If the error persists the alarm code will appear again.
- E20 - The appliance does not drain the water.
- E40 - The appliance door is open or not closed correctly. Please check the door!

If the appliance is overloaded, remove some items from the drum and/or hold the door shut while touching the Inicio/Pausa button until the indicator stops flashing (see the picture below).

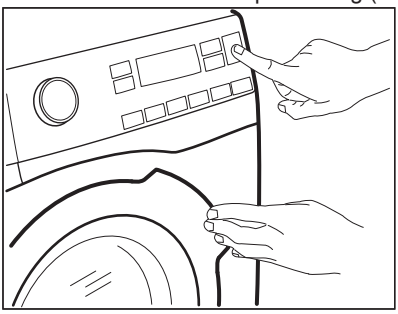

WARNING!
Deactivate the appliance before carrying out any check.

16.2 Possible failures

Problem	Possible solution
The programme does not start.	• Make sure that the mains plug is connected to the mains socket. • Make sure that the appliance door is closed. • Make sure that there is no damaged fuse in the fuse box. • Make sure that the Inicio/Pausa has been touched. • If the delay start is set, cancel the setting or wait for the end of countdown. • Deactivate the Child Lock function if it is on. • Check the position of the knob on the selected programme.
The appliance does not fill with water properly.	• Make sure that the water tap is open. • Make sure that the pressure of the water supply is not too low. For this information, contact your local water authority. • Make sure that the water tap is not clogged. • Make sure that the inlet hose has no kinks, damages or bends. • Make sure that the connection of the water inlet hose is correct. • Make sure that the filter of the inlet hose and the filter of the valve are not clogged. Refer to 'Care and cleaning'.
The appliance fills with water and drains immediately	• Make sure that the drain hose is in the correct position. The hose may be positioned too low. Refer to "Installation instruction".

Problem	Possible solution
The appliance does not drain the water.	• Make sure that the sink spigot is not clogged. • Make sure that the drain hose has no kinks or bends. • Make sure that the drain filter is not clogged. Clean the filter, if necessary. Refer to "Care and cleaning". • Make sure that the connection of the drain hose is correct. • Set the drain programme if you set a programme without drain phase. • Set the drain programme if you set an option which ends with water in the tub.
The spin phase does not operate or the washing cycle lasts longer than usual.	• Set the spin programme. • Make sure that the drain filter is not clogged. Clean the filter, if necessary. Refer to "Care and cleaning". • Adjust manually the items in the tub and start the spin phase again. This problem may be caused by balance problems.
There is water on the floor.	• Make sure that the couplings of the water hoses are tight and there is not water leakages. • Make sure that the water inlet hose and the drain hose have no damages. • Make sure you use the correct detergent and the correct quantity of it.
You cannot open the appliance door.	• Make sure that a washing programme that ends with water in tub, has been selected. • Make sure that the washing programme is finished. • Set the drain or the spin programme if there is water in the drum. • Make sure that the appliance receives electrical power. • This problem may be caused by a failure of the appliance. Contact the Authorised Service Centre. If you need to open the door, please read carefully "Emergency door opening".
The appliance makes an unusual noise and vibrates.	• Make sure the levelling of the appliance is correct. Refer to "Installation instruction". • Make sure that the packaging and/or the transit bolts are removed. Refer to "Installation instruction". • Add more laundry in the drum. The load may be too small.
The programme duration increases or decreases during programme execution.	• The SensiCare System is able to adjust the programme duration according to the type and the laundry load size. Refer to "The SensiCare System load detection" in "Daily Use" chapter.

Problem	Possible solution
The washing results are not satisfactory.	• Increase the detergent quantity or use a different detergent. • Use special products to remove the stubborn stains before you wash the laundry. • Make sure that you set the correct temperature. • Decrease the laundry load.
Too much foam in the drum during the washing cycle.	• Reduce the quantity of detergent.
After the washing cycle, there are some detergent residues in the dispenser drawer.	• Make sure that the flap is in the correct position (UP for powder detergent - DOWN for liquid detergent). • Make sure you have used the detergent dispenser according the indications given in this user manual.
The appliance does not dry or does not dry correctly.	• Turn the water tap on. • Make sure the drain filter is not clogged. • Reduce the laundry load. • Make sure you have set the correct cycle. if necessary, set again a short drying time.
The laundry is full of different colours fluff.	The fabrics washed in the previous cycle released fluff of a different colour: • The drying phase helps to eliminate some fluff. • Clean the clothes with a fluff remover. In case of an excessive amount of fluff in the drum run the special programme to clean it (refer to “Fluff in the fabrics" for more details).

After the check, activate the appliance. The programme continues from the point of interruption.
If the problem occurs again, contact the Authorised Service Centre.
If the display shows other alarm codes, deactivate and activate the appliance. If the problem continues, contact the Authorised Service Centre.

16.3 Emergency door opening

In case of power failure or functioning failure the appliance door remains locked. The washing programme continues when the power is restored. If the door remains locked in case of failure, it is possible to open it using the emergency unlock function.

Before opening the door:

CAUTION!
Risk of burns! Make sure that the water temperature is not too high and the laundry is not hot. If necessary, wait until they cool down.

CAUTION!
Risk of injury! Make sure that the drum is not rotating. If necessary, wait until the drum stops rotating.

Make sure that the water level inside the drum is not too high. If necessary, proceed with an emergency drain (refer to «Emergency drain» in «Care and cleaning» chapter).

To open the door, proceed as follows:

1. Press the On/Off button to switch the appliance off.
2. Disconnect the mains plug from the mains socket.
3. Open the filter flap.
4. Pull twice the emergency unlock trigger downward and open the appliance door.

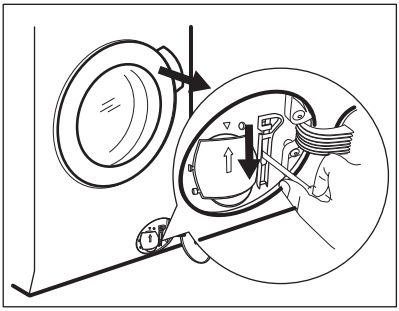

5. Take out the laundry and then close the appliance door.
6. Close the filter flap.

17. CONSUMPTION VALUES

Stated values are obtained in laboratory conditions with relevant standards. Different causes can change the data: the quantity and type of laundry and ambient temperature. Water pressure, the supply voltage and the temperature of inlet water may also affect the washing programme duration.

Technical specifications may be changed without prior notice to improve the quality of product.

During the washing programme, the ProSense technology can vary the wash duration and the consumption values. For further details see 'The ProSense load detection' paragraph in 'Daily Use' chapter.

Programmes	Load (kg)	Energy consumption (kWh)	Water consumption (litre)	Approximate programme duration (minutes)
Cottons 60°C	9	1.65	80	200
Algod.Eco Cotton Energy Saving Programme 60°C[1)]	9	0.85	56	295
Cottons 40°C	9	1.25	80	200
Synthetics 40°C	4	0.78	55	130
Delicates 40°C	4	0.60	63	91

Programmes	Load (kg)	Energy consumption (kWh)	Water consumption (litre)	Approximate programme duration (minutes)
Wool/Handwash 30°C	1.5	0.35	57	60

1) «Cotton Energy Saving programme » at 60°C with a load of 9kg is the reference programme for the data entered in the energy label, in compliance with 96/60/EC Directive.

18. TECHNICAL DATA

Dimension	Width/ Height/ Depth/ Total depth	600 mm/ 850 mm/ 631 mm/ 660 mm
Electrical connection	Voltage Overall power Fuse Frequency	230 V 2200 W 10 A 50 Hz
Level of protection against ingress of solid particles and moisture ensured by the protective cover, except where the low voltage equipment has no protection against moisture		IPX4
Water supply 1)		Cold water
Water supply pressure	Minimum Maximum	0,5 bar (0,05 MPa) 8 bar (0,8 MPa)
Maximum wash load	Cotton	9 kg
Maximum dry load	Cotton Synthetics	6 kg 4 kg
Spin Speed	Maximum	1550 rpm

1) Connect the water inlet hose to a water tap with a 3/4" thread.

19. ACCESSORIES

19.1 Available in www.electrolux.com/shop or from authorised dealer

Only appropriate accessories approved by ELECTROLUX ensure the safety standards of the appliance. If unapproved parts are used, any claims will be invalidated.

19.2 Fixing plate kit (4055171146)

Available from your authorised dealer.

If you install the appliance on a plinth, secure the appliance in the fixing plates.

Read carefully the instructions supplied with the accessory.

19.3 Pedestal with the drawer

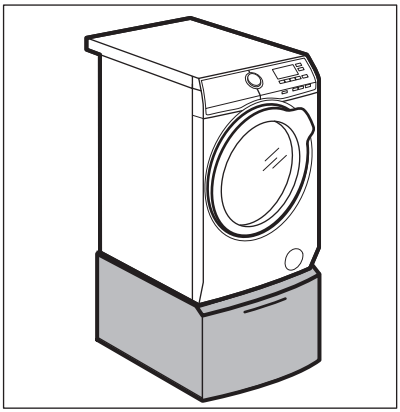

To raise your appliance and make loading and unloading laundry easier.

The drawer can be used for laundry storage e.g.: towels, cleaning products and more.

Read carefully the instructions supplied with the accessory.

20. ENVIRONMENTAL CONCERNS

Recycle materials with the symbol ♺. Put the packaging in relevant containers to recycle it. Help protect the environment and human health by recycling waste of electrical and electronic appliances. Do not dispose of appliances marked with the symbol with the household waste. Return the product to your local recycling facility or contact your municipal office.

www.electrolux.com/shop



157015480-A-102018

CE