XHB432-EUK



43" Xtreme™ High Bright Outdoor Display

There has never been an outdoor daylight readable display built to withstand the harsh outdoor elements like the Peerless-AV® Xtreme™ High Bright. Featuring a fully sealed, IP68 Rated design and a patented Dynamic Thermal Transfer™ System, Xtreme High Bright Outdoor Displays are maintenance-free, with no fans, vents or filters, and are fully protected against water, dust, moisture and even insects. The display's cover glass is optically bonded, which increases the perceived contrast ratio and cuts down on glare, providing amazing picture quality even in direct sunlight. With an operating temperature range of -35°C to 60°C, Xtreme Displays are designed to thrive year-round outside, without worry of extreme hot or cold temperature waves. This High Bright line of commercial displays offer 2500nits of light output to combat high ambient lighting conditions, while the ambient light sensor automatically adjusts the display's brightness to optimize the power consumption and enhance the viewing experience. Providing unmatched capabilities, Xtreme High Bright Outdoor Displays are the perfect digital signage or entertainment solution for any professional application.

Commercial INTEGRATOR 2017 BEST WINNER

All Weather Rated (IP68)

Operating Temperature Range: -35°C to 60°C

- Optically bonded, anti-reflective cover glass increases the perceived contrast ratio and cuts down on glare, providing amazing picture quality, even in direct sunlight
- Daylight readable with LED backlight and full HD 1080p resolution for a bright, crisp picture
- Includes Quarter Wave Plate polarizer, allowing for portrait and landscape installations
- IPS panel provides colour accuracy, even at the harshest of angles
- Remote and Local monitoring, supported via IP addressable user interface, for temperature, humidity, and power draw diagnostics of the display
- Convenient cavity to store localised small format media players (Internal - 356mm x 159mm x 33mm Opening - 306mm x 127mm)

AMBIENT LIGHT SENSOR
Automatically adjusts brightness to best match the lighting conditions, which optimizes the display's power consumption and enhances the viewing experience (optional ALS extender accessory available)

HIGH BRIGHT OUTPUT
Offers 2500nits of light output to combat high ambient lighting conditions



FULLY-SEALED DESIGN
Highest environmental rating (IP68) prevents the ingress of foreign materials, such as water, dust, moisture and insects, from entering the display

IK10 RATED, IMPACT RESISTANT, TEMPERED COVER GLASS
Protects the screen against vandalism and debris



PATENTED DYNAMIC THERMAL TRANSFER™ SYSTEM
Keeps internal components properly cooled in extreme heat

RoHS 2002/95/EC

sales@peerless-av.eu.com
peerless-av.com

peerless-AV®
Driving Technology Through Innovation

Model Numbers

WARRANTY: 2 years

XHB432-EUK	43" Xtreme™ High Bright Outdoor Display

LCD Display

ACTIVE SCREEN SIZE	42.51" (1080mm) Diagonal
PIXEL PITCH	.4902 x .4902mm
ASPECT RATIO	16:9
RESOLUTION	1920 x 1080
COLOUR DEPTH	8Bit (16.7 Million Colours)
BRIGHTNESS	2,500cd/m²
BACKLIGHT ADJUSTMENT	Automatic (Ambient Light Sensor)
CONTRAST RATIO	1300:1
VIEWING ANGLE	178° Vertical/Horizontal
RESPONSE TIME	12ms (Grey to Grey)
REFRESH RATE	60Hz

Environmental

OPERATING TEMPERATURE	-35°C - 60°C (-31°F - 140°F)
IP RATING	IP68
SAFETY/EMC	FCC Class A

Power

AC INPUT	100 VAC to 240 VAC, 50 to 60 Hz	**POWER CONSUMPTION**	293W

Display Controller Features

PICTURE ADJUSTMENT	Brightness, Contrast, Tint, Sharpness, Colour
PICTURE MODE	Standard, Dynamic, Personal, Theater
COLOUR TEMPERATURE ADJUSTMENT	Cool, Normal, Warm, Personal
SCREEN ADJUSTMENT	4:3, 16:9, Full, Zoom
CLOCK, SLEEP TIMER	Yes
V-CHIP	Yes

Mechanical

SIZE (W x H x D)	1003 x 591 x 124mm (39.50" x 23.28" x 4.89")
COLOUR	Black
GLASS	IK10 Rated, Tempered & Anti-reflective
VESA® PATTERN	400 x 200, 400 x 400mm
NET WEIGHT	39.91kg (88lb)

Input/Output Connections

VGA INPUT	15 pin D-SUB (x1)
HDMI INPUT	HDMI (x3), 480i, 480p, 720p, 1080i , 1080p
CVBS INPUT	3.5mm (x1)
YPBPR INPUT	3.5mm (x1)
VGA STEREO AUDIO INPUT	3.5mm (x1)
DISPLAYPORT	DP (x1)
ANALOG AUDIO OUTPUT	3.5mm Headphone Jack (x1)
DIGITAL AUDIO OUTPUT	Optical (x1)
USB DATA INPUT	USB 2.0 A (x1) [Audio, Video, Text & Photo]
RS232	DB-9 (Female)
12VDC 2.5A OUTPUT	2.5mm (x1)
USB POWER 5VDC 2.4A OUTPUT	USB 2.0 A (x1)
IR EXTENDER	3.5mm (x1)
AMBIENT LIGHT SENSOR EXTENDER	3.5mm (x1)
LAN INPUT	RJ-45 (x1)

Package Specifications

	PACKAGE SIZE (W x H x D)	PACKAGE SHIP WEIGHT	PACKAGE UPC CODE	PACKAGE CONTENTS	PALLET SIZE (W X D)	UNITS IN PACKAGE
XHB432-EUK	1067 x 661 x 216mm (42.00" x 26.00" x 8.50")	43.5kg (96lb)	735029322559	Display, Waterproof Universal Remote Control, User's Guide, Hex Wrench, Power Cord, IR Extender	1200mm x 1000mm (4x per pallet)	1

Accessories

EDS-VW765-LAND:	SmartMount® Outdoor Full Service Video Wall Mount, Landscape
EPA762PU:	Outdoor Articulating Wall Mount
EPT650(-S):	Outdoor Universal Tilt Wall Mount
ESA763PU:	Outdoor Articulating Wall Mount
ESF655P:	Outdoor Universal Flat Wall Mount, Portrait
ECMU:	Wind Rated Ceiling Mount
EPMU:	Wind Rated Pedestal Mount
EWMU:	Wind Rated Wall Mount
ACCD-05K:	5 Volt Accessory Kit
ACCD-12K:	12 Volt Accessory Kit
ACCD-ALG:	Analog Accessory Kit
ACCD-ALS:	Ambient Light Sensor Extender
CLCOV-LG-BLK:	Display Cover - Large

All dimensions = inch (mm)

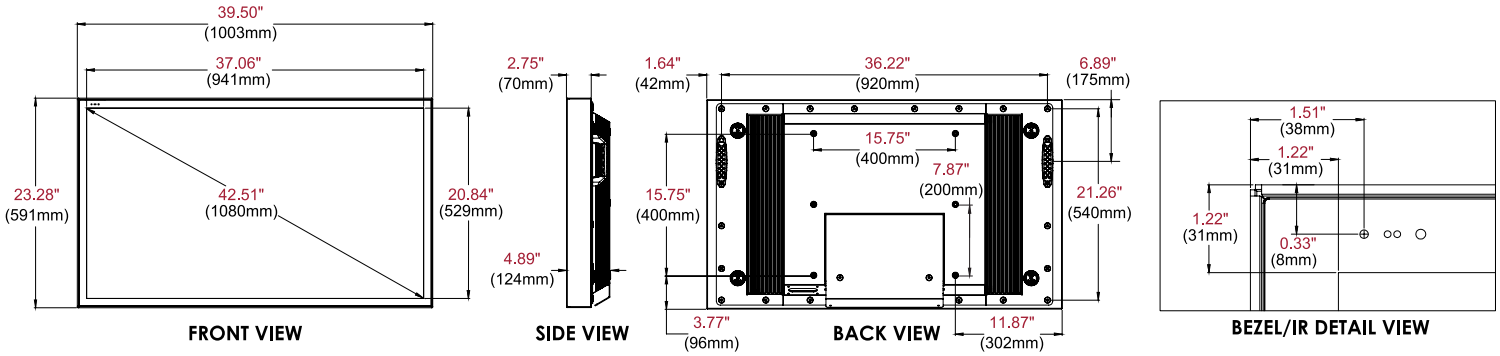

Architect Specifications

The Xtreme™ High Bright Outdoor Display shall be a Peerless-AV model XHB432-EUK and shall be located where indicated on the plans. Assembly and installation shall be done according to instructions provided by the manufacturer.

Visit **peerless-av.com** to see the complete line of AV solutions from Peerless-AV, including outdoor displays, wireless, kiosks, digital audio, display mounts, projector mounts, carts/stands, and a full assortment of accessories.

Peerless-AV
2300 White Oak Circle
Aurora, IL 60502 USA

(800) 865-2112
(630) 375-5100
Fax: (800) 359-6500

Peerless-AV EMEA
Unit 3 Watford Interchange
Colonial Way, Watford
Herts, WD24 4WP
United Kingdom
+44 (0) 1923 200100
Fax: +44 (0) 1923 200101

Peerless-AV Latin America
Ave de las Industrias 413
Parque Industrial Escobedo
Escobedo, N.L.,
Mexico 66062
+52 (81) 8384-8300
Fax: +52 (81) 8384-8360

peerless-AV®
Driving Technology Through Innovation

© 2018 Peerless Industries, Inc. Peerless-AV® is a registered trademark and Xtreme™ is a trademark of Peerless Industries, Inc. All rights reserved.
Other parties' marks are the property of their respective owners.