ZEBRA

Accessories Guide

# VEHICLE-MOUNTED COMPUTERS

VH10

VC80 Series

VC70

# VEHICLE-MOUNTED COMPUTERS

## Accessories Guide




**VC80**
**Windows 7/10**




**VH10**
**Windows CE**




**VC70**
**Windows CE**




**VC80x**
**Android**

ZEBRA



Zebra Confidential: For Internal Use Only



# ACCESSORIES GUIDE

The Zebra Technologies portfolio of accessories extends the capabilities of your **VH10**, **VC80, VC80x** or **VC70**, and enables you to lower the cost of ownership of your Zebra mobile computer.

This simple step-by-step guide is designed to assist you with the selection of your accessories based on your needs and use of the computers.



Zebra Confidential: For Internal Use Only

# VEHICLE-MOUNTED COMPUTERS INSTALL ILLUSTRATION

| STEP | ACCESSORY | SLIDE |
|---|---|---|
| 1 | Power Supplies & Cables | 6-14 |
| 2 | Mounts | 15-19 |
| 3 | Scanners | 20-22 |
| 4 | Keyboards | 23-26 |
| 5 | Antennas | 27-29 |
| 6 | Voice | 30-31 |
| 7 | Miscellaneous | 32-33 |
| 8 | Service Parts | 34-35 |

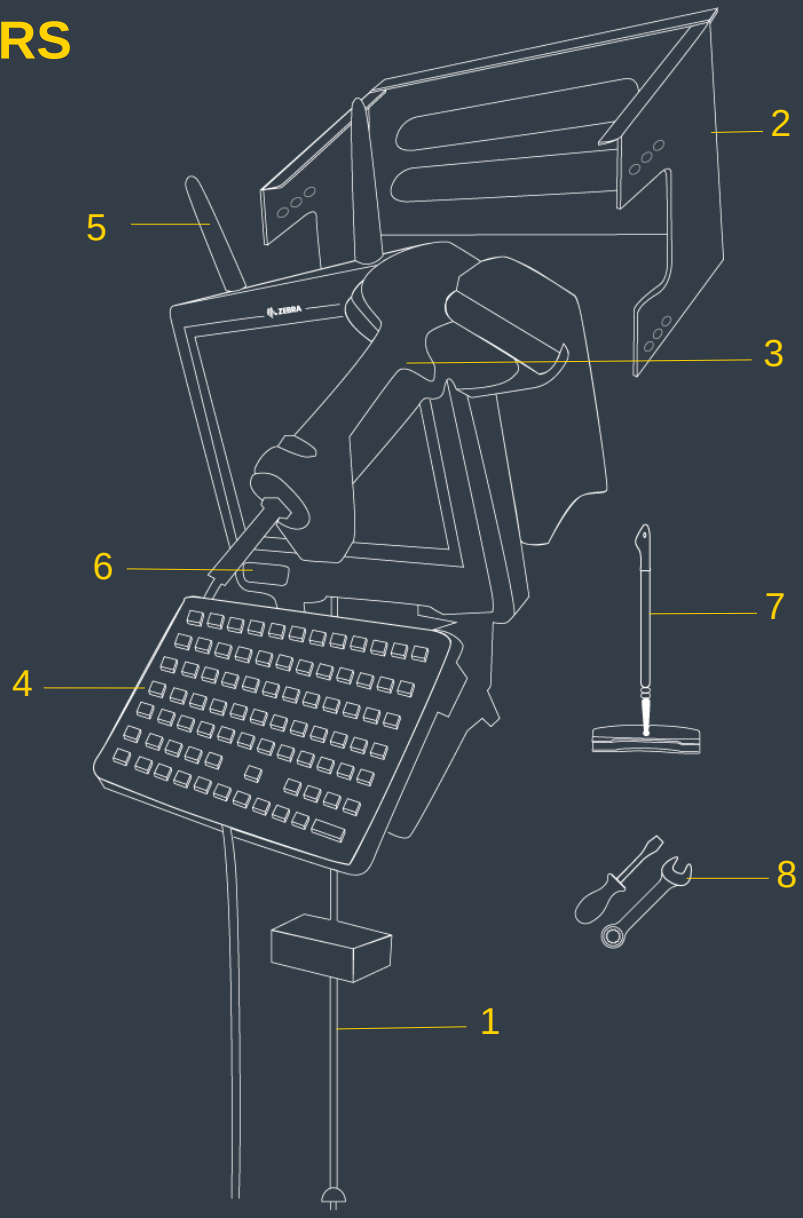




Zebra Confidential: For Internal Use Only

# STEP 1: POWER SUPPLIES AND CABLES

CHOOSE FROM MULTIPLE INSTALLATION CASES:

- PLUG INTO AN AC WALL OUTLET
  - **VC70, VC80 Series OR VH10** — SLIDE 6

- PLUG INTO THE VEHICLE'S DC POWER
  - **VC70** — SLIDE 7-9
  - **VH10 OR VC80 Series** — SLIDE 10-14

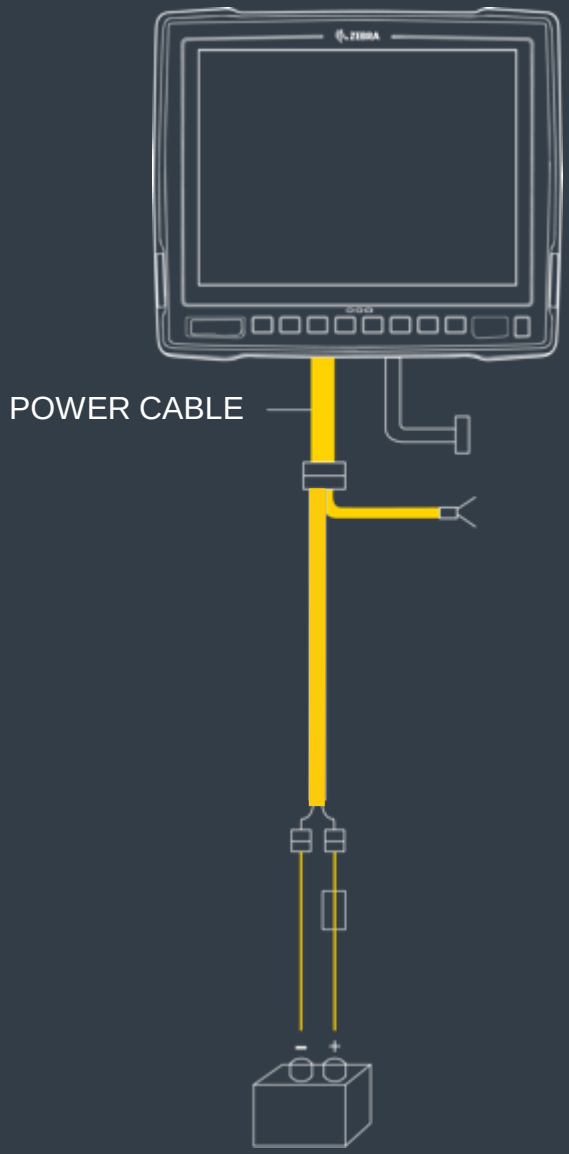




Zebra Confidential: For Internal Use Only

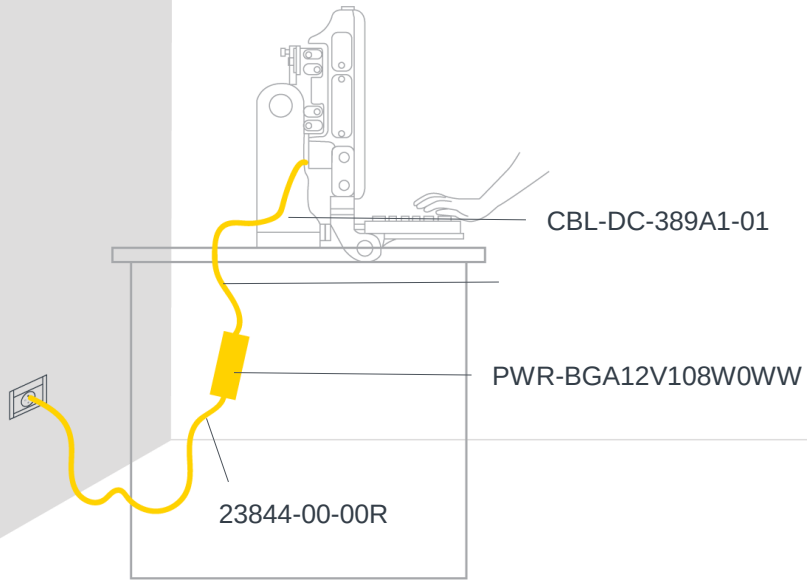


## VC70, VC80 Series OR VH10 — POWERED BY PLUGGING INTO AN AC WALL OUTLET

| | | VH10 | VC70 | VC80 Series |
|---|---|---|---|---|
|  | **AC POWER CABLE** \| **ID:** 23844-00-00R<br>US AC line cord, 7.5 feet long, grounded, three wire for the AC power supplies PS1450 and PWR-BGA12V108W0WW. Associated Countries: United States. | • | • | • |
|  | **AC POWER SUPPLY for VC70** \| **ID:** PWR-BGA12V108W0WW<br>Order country specific 3 wire grounded AC line cord separately. | | • | |
|  | **DC POWER SUPPLY ADAPTER CABLE for VC70** \| **ID:** CBL-DC-389A1-01<br>6.5', required when the PWR-BGA12V108W0WW is used. | | • | |
|  | **AC POWER SUPPLY for VH10 and VC80 Series** \| **ID:** PS1450<br>100/240 VAC Power Supply, 12V, 6A, order AC cable separate | • | | • |



Zebra Confidential: For Internal Use Only

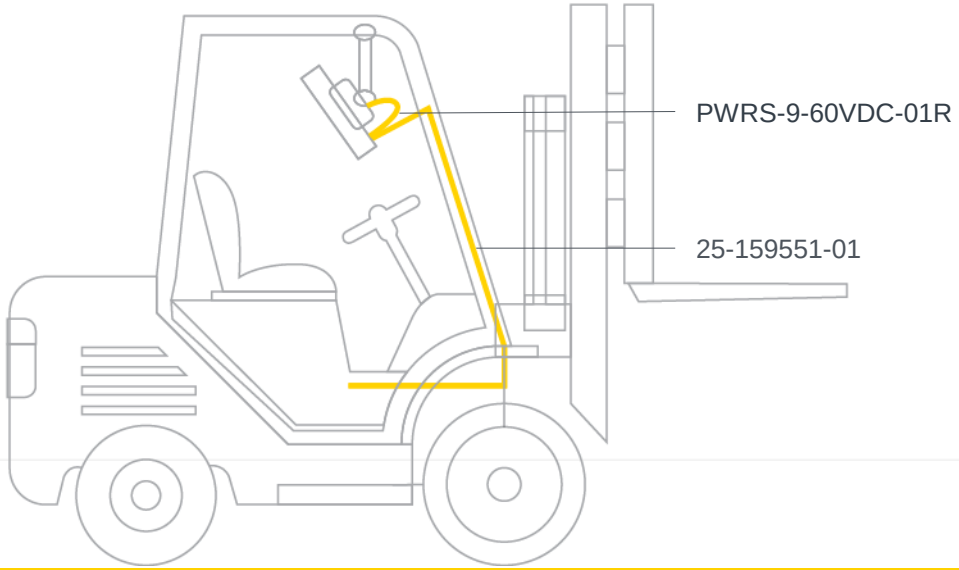


| VC70 | VEHICLE MOUNT (DC POWER SUPPLY MOUNTED ON THE VC70) |
|---|---|
| Buy both  | **DC POWER SUPPLY \| ID:** PWRS-9-60VDC-01R<br>External DC Power supply,VC70, 9-60VDC Requires 25-159551-01 fused DC power cable to vehicle battery |
|  | **DC POWER CABLE \| ID:** 25-159551-01<br>Cable, external 9-60V DC power supply to vehicle battery, 10', includes fuse, VC70. Required for the PWRS-9-60VDC-R |



Zebra Confidential: For Internal Use Only

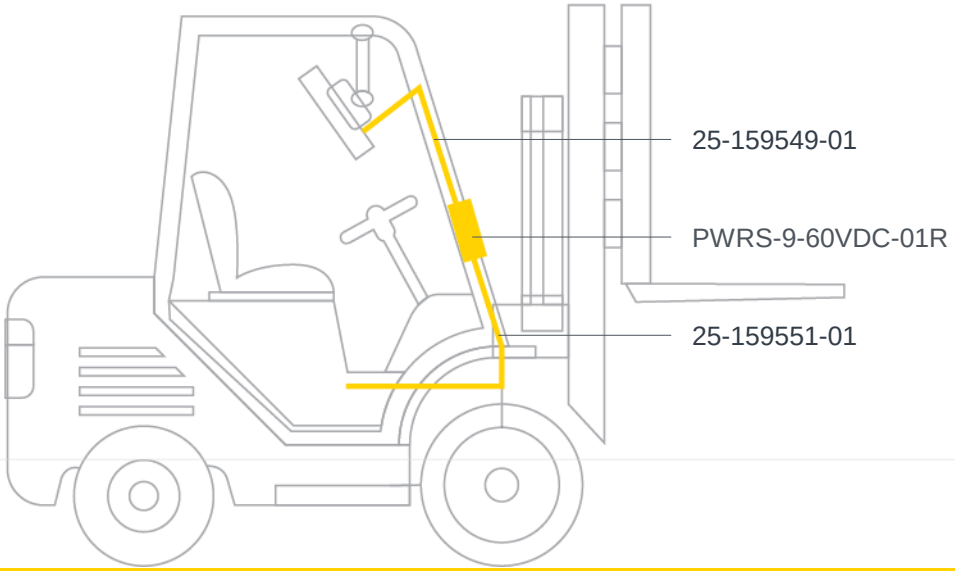


| VC70 | VEHICLE MOUNT (DC POWER SUPPLY NOT MOUNTED ON THE VC70) |
|---|---|
| Buy all of these | |
|  | **EXTENSION CABLE \| ID:** 25-159549-01<br>Cable, external power supply to VC70 extender. 6.5', VC70. Required when the PWRS-9-60VDC-01R is not mounted on the back of the VC70. |
|  | **DC POWER SUPPLY \| ID:** PWRS-9-60VDC-01R<br>External DC Power supply,VC70, 9-60VDC Requires 25-159551-01 fused DC power cable to vehicle battery |
|  | **DC POWER CABLE \| ID:** 25-159551-01<br>Cable, external 9-60V DC power supply to vehicle battery, 10', includes fuse, VC70. Required for the PWRS-9-60VDC-R |



Zebra Confidential: For Internal Use Only

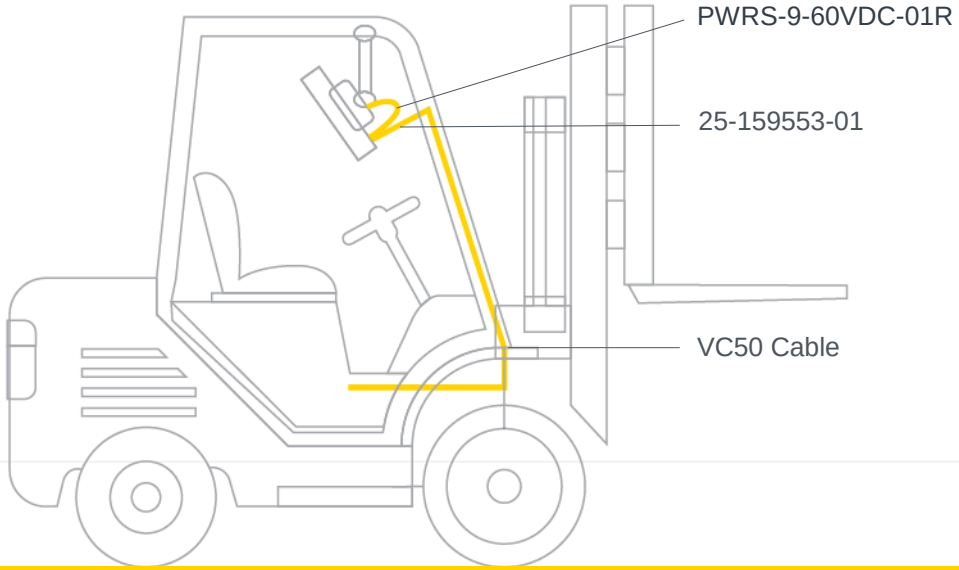


| | VC70 | VEHICLE MOUNT (WHEN REPLACING THE VC50 AND REUSING THE VC50 DC POWER CABLE) |
|---|---|---|
| Buy both |  | **DC POWER SUPPLY \| ID:** PWRS-9-60VDC-01R<br>External DC Power supply,VC70, 9-60VDC Requires 25-159551-01 fused DC power cable to vehicle battery |
| |  | **POWER ADAPTER CABLE \| ID:** 25-159553-01<br>Cable, external power supply to existing VC5090 power cable (25-71919-03R or 25-71919-04R), includes fuses, 2', VC70 |



Zebra Confidential: For Internal Use Only

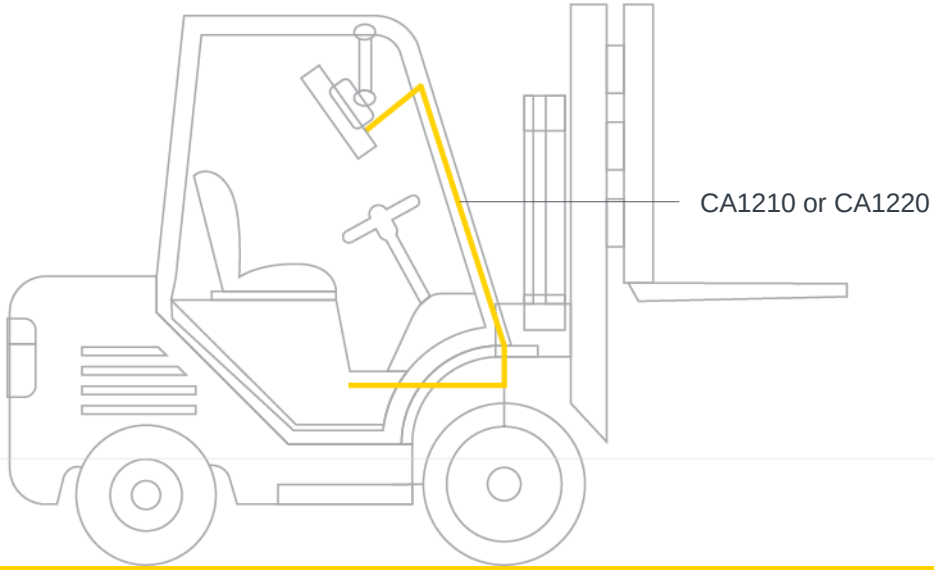


| VH10 OR VC80 Series | VEHICLE MOUNT (POWER SUPPLY IS INSIDE THE COMPUTER) |
|---|---|
| Pick one | |
|  | **DC POWER CABLE \| ID:** CA1210<br>Power Extension Cable, DC, 6', waterproof |
|  | **DC POWER CABLE \| ID:** CA1220<br>Power Extension Cable DC, 6', waterproof - Includes Screen Blanking feature |



Zebra Confidential: For Internal Use Only

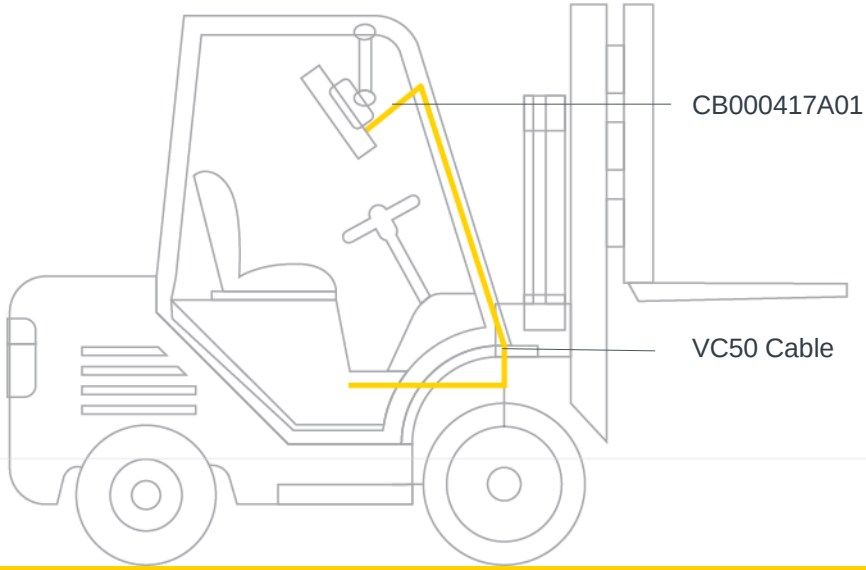


**VH10 OR VC80 Series**

## VEHICLE MOUNT (WHEN REPLACING VC50 AND REUSING THE VC50 DC POWER CABLE)



**POWER ADAPTER CABLE | ID:** CB000417A01
DC Power Adapter to VC50


Zebra Confidential: For Internal Use Only

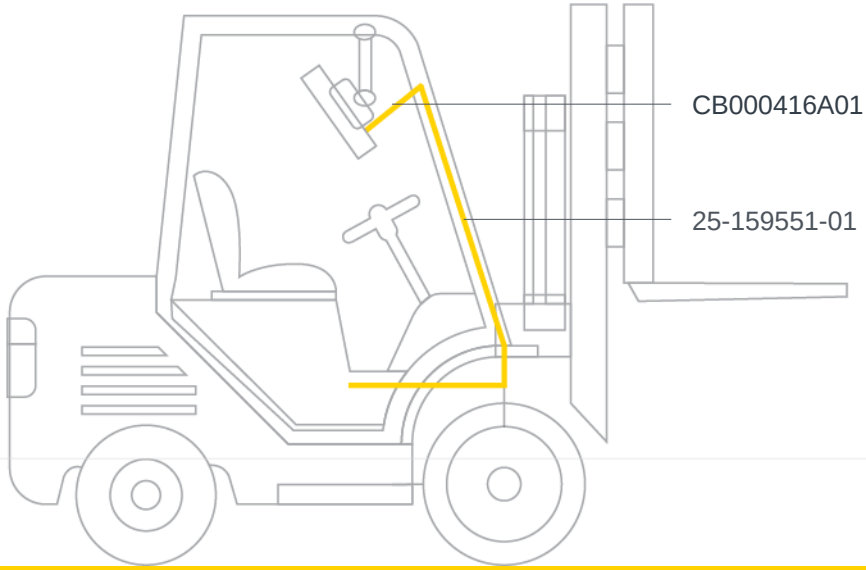


## VH10 OR VC80 Series

## VEHICLE MOUNT (WHEN REPLACING VC70 AND REUSING THE VC70 DC POWER CABLE)



**POWER ADAPTER CABLE | ID:** CB000416A01
DC Power Adapter to VC70


Zebra Confidential: For Internal Use Only

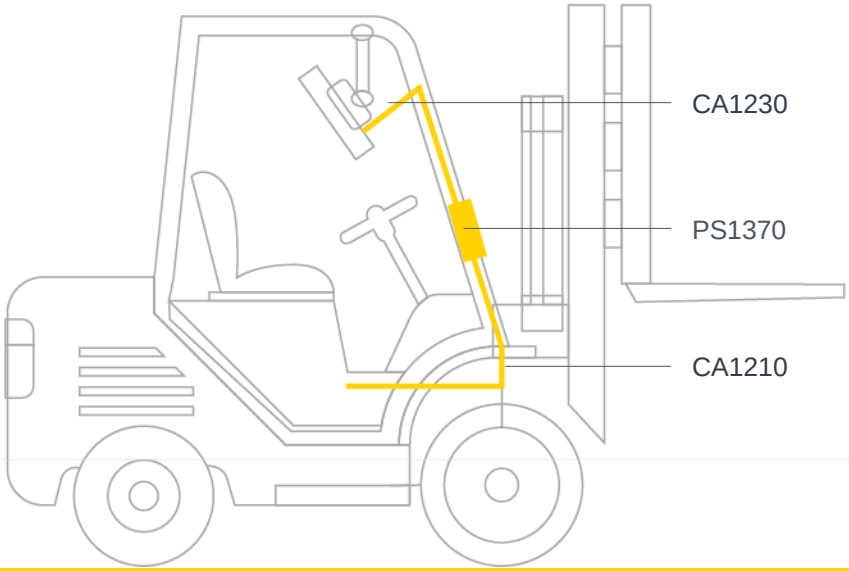


| VH10 OR VC80 Series | VEHICLE MOUNT (WITH PRE-REGULATOR TO DECREASE VOLTAGE - FOR TRUCKS WITH BATTERIES GREATER THAN 48V) |
|---|---|

Buy all three



**DC POWER CABLE | ID:** CA1230
DC Power Adapter to VC70



**PRE-REGULATOR | ID:** PS1370
Pre-Regulator, 19 - 90 VDC in, 15 VDC out, 90 W



**DC POWER CABLE | ID:** CA1210
Power Extension Cable, DC, 6', waterproof



Zebra Confidential: For Internal Use Only

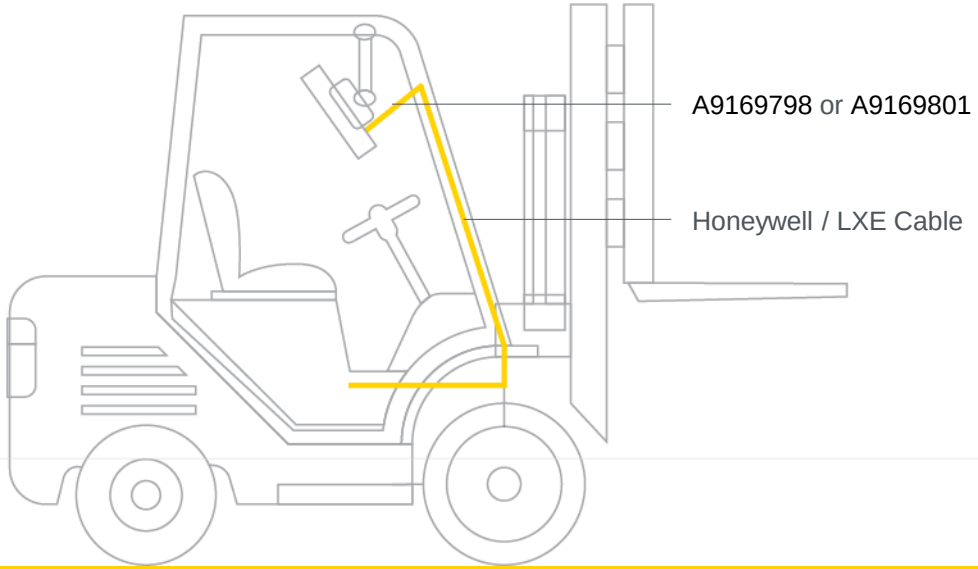


## VH10 OR VC80 Series

## VEHICLE MOUNT (WHEN REPLACING A HONEYWELL/LXE VC AND REUSING THE DC POWER CABLE)



**POWER ADAPTER CABLE | ID:** A9169798
Adapter CPC to LXE/Honeywell VX8, VX9, VM1, VM2 AND VM3 DC Power Extension Cable



**POWER AND SCREEN BLANKING ADAPTER CABLE | ID:** A9169801
Adapter CPC and serial to LXE VX8 and VX9 DC Power Extension and Screen Blanking Cable


Zebra Confidential: For Internal Use Only

# STEP 2: MOUNTS

YOUR MOUNTING OPTIONS DEPEND ON YOUR COMPUTER.

**FOR THE VH10 AND VC80 Series**
CHOOSE BETWEEN THE FOLLOWING: — SLIDES 16 AND 17

- RAM MOUNT
- QUICK-RELEASE MOUNT
- ADAPTER BRACKET FOR 82XX MOUNTS
- ADAPTER BRACKETS FOR LEGACY VCs

**FOR THE VC70**, CHOOSE ONE: — SLIDE 18

- RAM MOUNT
- U MOUNT
- ADAPTER BRACKET FOR VC50 MOUNT

YOU CAN ALSO SELECT A RAM FIXED MOUNT BASED ON YOUR VEHICLE THAT WORKS WITH THE VH10, VC70 , VC80 AND VC80x. — SLIDE 19

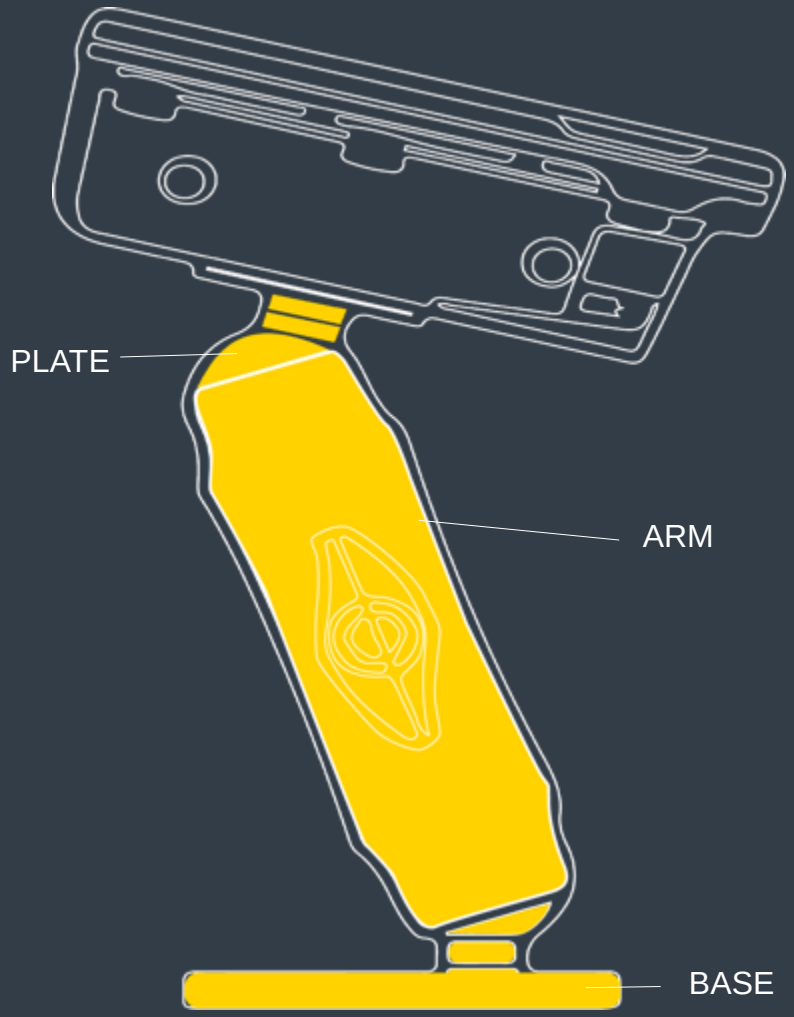




Zebra Confidential: For Internal Use Only

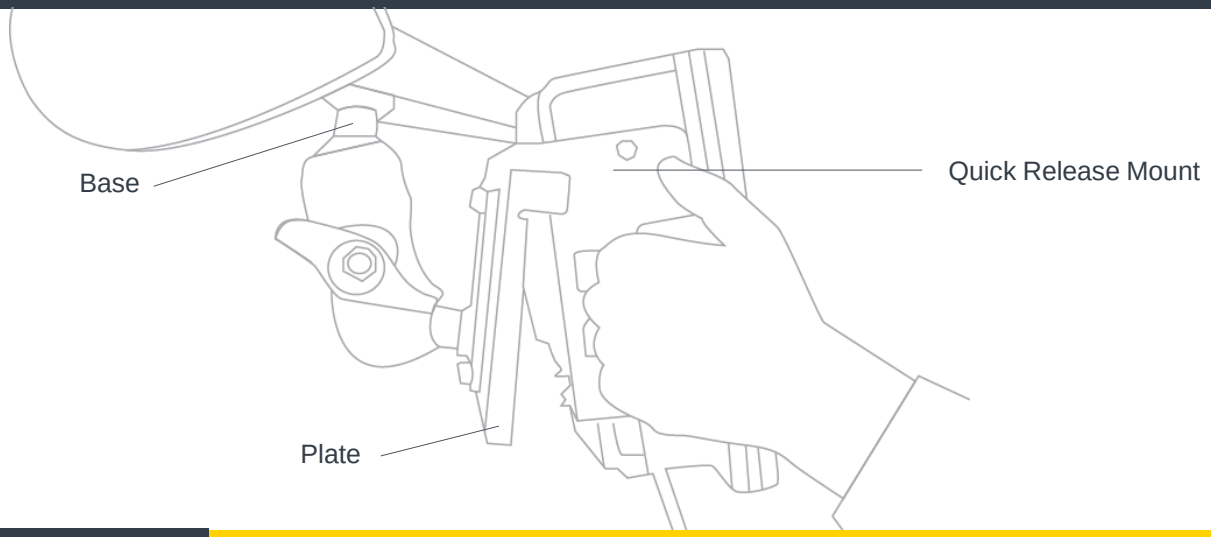


## FOR THE VH10 OR VC80 Series

## DO YOU NEED A RAM MOUNT, A QUICK RELEASE MOUNT, OR ADAPTERS TO OLD 82XX MOUNTS?

| | | |
|---|---|---|
|  | **QUICK RELEASE MOUNT** | **\| ID:** MT4200<br>Quick release mount. Attaches to the side of the computer and includes Mounting Plate (MT4205) that attaches to forklift. |
|  | **PLATE** | **\| ID:** MT4205<br>Mounting plate for MT4200, Quick Release Mount, needed if you have one computer for multiple trucks |
|  | **ADAPTER BRACKET** | **\| ID:** MT4210<br>Adapter bracket kit for the older 82XX mounts |
|  | **PLATE** | **\| ID:** MT3501<br>VESA plate (for 4" or 12" RAM arm), Can also be attached to Quick Release Mount Plate (MT4205) |
|  | **BASE** | **\| ID:** MT4510<br>RAM 2"x3" rectangular base with 2.25" rubber ball. Can be attached directly to VH10, VC80 and VC80x |



Zebra Confidential: For Internal Use Only







## FOR THE VH10 OR VC80 Series

## DO YOU REPLACE A LEGACY ZEBRA OR HONEYWELL/LXE VC?



### ADAPTER FOR VC50 U-MOUNT | ID: MNT-VC80-ADPA1-1

The adapter brackets for the VC50 U-Mount can be used to replace a VC50 by a VH10, VC80 or a VC80x and reuse the existing U-Mount.



### U-MOUNT, WITH VC70 U-MOUNT HOLE PATTERN | ID: KT-U-MOUNT-VC80-R

The VC80 Series U-Mount is smaller than the one for the VC50 and has several mounting holes which allow drop-in replacements of VC70, and DLoG U-Mounts. It provides step less tilting of the VC and comes with the VC50 adapters.



### ADAPTER FOR HONEYWELL U-MOUNT | ID: MNT-VC80-ADPB1-1

The adapter brackets for the Honeywell U-Mount can be used to replace a Honeywell/LXE VC by a VH10, VC80 or a VC80x and reuse the existing U-Mount (Honeywell part number VM1010BRKTKIT).



Zebra Confidential: For Internal Use Only

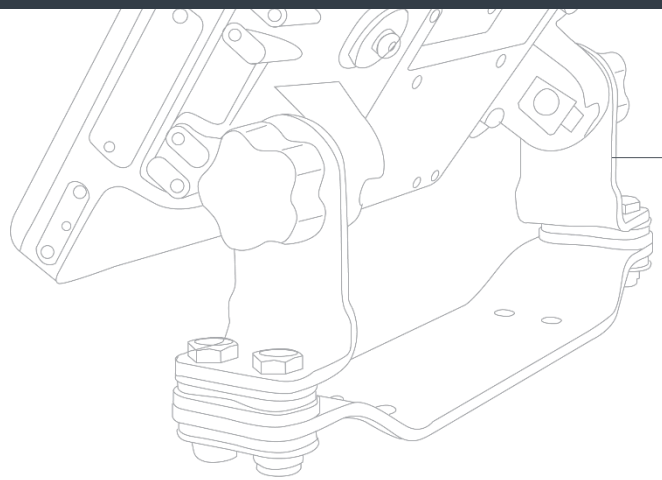


**FOR THE VC70**

**DO YOU NEED A RAM MOUNT, AN U MOUNT, OR ADAPTER BRACKETS TO THE VC50 U MOUNT?**



**RAM MOUNT | ID:** RAM-D-2461U-MOTO7
RAM bridge with RAM-D-2461U RAM MOUNT, D (2.25"") size ball with screws. Including screws to mount the PWRS-9-60VDC-01R External DC Power Supply. Used when replacing equipment already mounted with RAM mounts



**RAM MOUNT | ID:** RAM-D-2461U-MOTO7B
RAM-D-2461U RAM MOUNT, D (2.25") size ball with screws. Used when the PWRS-9-60VDC-01R External DC Power Supply has to be mounted away or when AC power supply is used. Used when replacing equipment already mounted with RAM mounts



**U MOUNT | ID:** KT-U-MOUNT-VC70-R
U mount, VC70, with mounting hardware



**ADAPTER BRACKET | ID:** KT-VC50ARM3-VC70-R
2 mount adapter arms for VC50 bracket, 3.5", with bolts



**ADAPTER BRACKET | ID:** KT-VC50ARM7-VC70-R
2 mount adapter arms for VC50 bracket, 7", with bolts



Zebra Confidential: For Internal Use Only

## VC70, VC80 Series & VH10

**DEPENDING ON THE VEHICLE, BELOW ARE THE RAM FIXED MOUNTING OPTIONS TO THE COMPUTER AND/OR THE VEHICLE.**

| | |
|---|---|
|  | **ARM \| ID:** MT4301<br>RAM mount, 4" arm |
|  | **ARM \| ID:** MT4302<br>RAM mount, 12" arm |
|  | **PLATE \| ID:** MT3501<br>VESA plate (for 4" or 12" RAM arm), Can also be attached to Quick Release Mount Plate (MT4205) |
|  | **PLATE \| ID:** MT3502<br>Round plate (for 4" or 12" RAM arm), Uses smaller footprint than MT3501 VESA Plate |
|  | **BASE \| ID:** MT3505<br>Clamp base (for 4" or 12" RAM arm), 2" max. width |
|  | **BASE \| ID:** MT3507<br>Clamp base (for 4" or 12" RAM arm), 3" max. width |
|  | **BASE \| ID:** MT3509<br>Rail base (for 4" or 12" RAM arm), 1-1/4" to 1-7/8" |
|  | **BASE \| ID:** MT3510<br>Rail base (for 4" or 12" RAM arm), 2" to 2 1/2" |
|  | **BASE \| ID:** MT4510<br>RAM 2"x3" rectangular base with 2.25" rubber ball |



Zebra Confidential: For Internal Use Only

# STEP 3: SCANNERS

WHEN SHOPPING FOR SCANNER CABLES, CHOOSE BETWEEN COILED OR STRAIGHT FOR YOUR SCANNER AND BETWEEN A RS232 OR USB PLUG.


SCANNER CABLES FOR **DS36XX** —— SLIDE 21

SCANNER CABLES FOR **LS/DS 34XX/35XX** —— SLIDE 22

SCANNER HOLDERS INCLUDE —— SLIDE 23


- UNIVERSAL OPTIONS
- SOLUTIONS FOR LS34X8ER AND LS35X8ER
- THERMOTRAZ HEATED

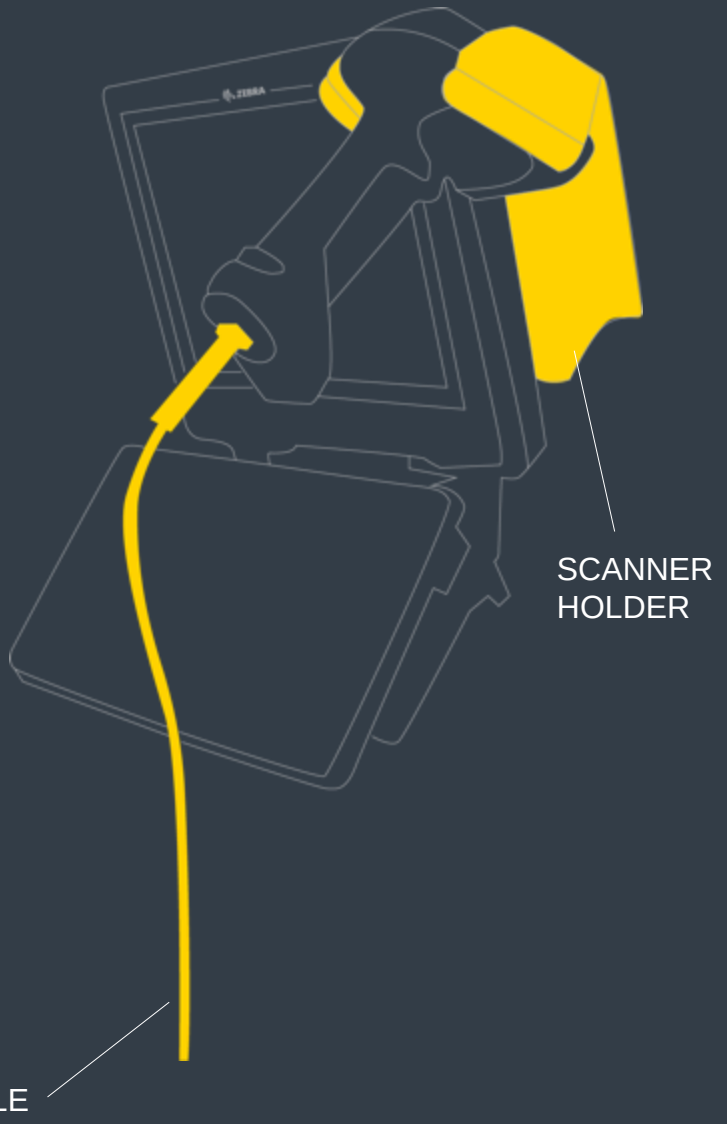




Zebra Confidential: For Internal Use Only

| | | VH10 | VC70 | VC80 Series |
|---|---|---|---|---|
| **DS36XX** | **SCANNER CABLES** | | | |
| | **RS232 \| ID:** CBA-RF3-C09ZAR<br>Cable - RS232: DB9 Female Connector, 9ft. (2.8m) Coiled, Power Pin 9, TxD on 2, True Converter, -30C | | ● | |
|  | **SHIELDED USB \| ID:** CBA-UF2-C12ZAR<br>Cable - Shielded USB: Series A Locking Connector for VC70, 12', Coiled, -30C | | ● | |
|  | **RS232 \| ID:** CBA-R71-C09ZAR<br>Cable - RS232: DB9 Female Connector, 9ft (2.8m) Coiled, Power Pin 9 | ● | | ● |
| | **RS232 \| ID:** CBA-RF2-C09ZAR<br>Cable - RS232: DB9 Female Connector, 9ft (2.8m) Coiled, Power Pin 9, -30C | ● | | ● |
|  | **SHIELDED USB \| ID:** CBA-U46-S07ZAR<br>Cable - Shielded USB: Series A Connector, 7ft. (2m), Straight, BC 1.2 | ● | | ● |
| | **SHIELDED USB \| ID:** CBA-U47-S15ZAR<br>Cable - Shielded USB: Series A Connector, 15ft. (4.6m), Straight, BC 1.2 | ● | | ● |
| | **SHIELDED USB \| ID:** CBA-UF1-S07ZAR<br>Cable - Shielded USB: Series A Connector, 7ft. (2m), Straight, BC 1.2, -30C | ● | | ● |
| **LS/DS 34XX/35XX** | **SCANNER CABLES** | | | |
|  | **SHIELDED USB \| ID:** 25-159548-01 Cable - Shielded USB: Series A Locking Connector for VC70, 12', Coiled, -30C | | ● | |
| | **RS232 \| ID:** CBA-R46-C09ZBR<br>Cable - RS232: DB9 Female Connector, 9ft. (2.8m) Coiled, Power Pin 9, TxD on 2, True Converter | | ● | |
| | **RS232 \| ID:** CBA-R49-C09ZAR<br>Cable - RS232: DB9 Female Connector, 9ft. (2.8m) Coiled, Power Pin 9, TxD on 2, True Converter, Low Temp -30C | | ● | |
|  | **RS232 \| ID:** CBA-R37-C09ZAR<br>Cable - RS232: DB9 Female Connector, 9ft (2.8m) Coiled, Power Pin 9 | ● | | ● |
| | **USB \| ID:** CBA-U09-C15ZAR<br>Cable - USB: Series A Connector, 15ft. (4.6m) Coiled | ● | | ● |
| | **SHIELDED USB \| ID:** CBA-U01-S07ZAR<br>Cable - Shielded USB: Series A Connector, 7ft. (2m), Straight, BC 1.2 | ● | | ● |
| | **SHIELDED USB \| ID:** CBA-U10-S15ZAR<br>Cable - Shielded USB: Series A Connector, 15ft. (4.6m), Straight, BC 1.2 | ● | | ● |



Zebra Confidential: For Internal Use Only

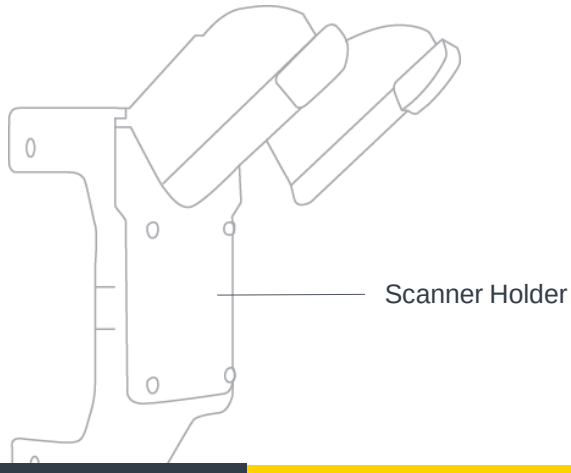


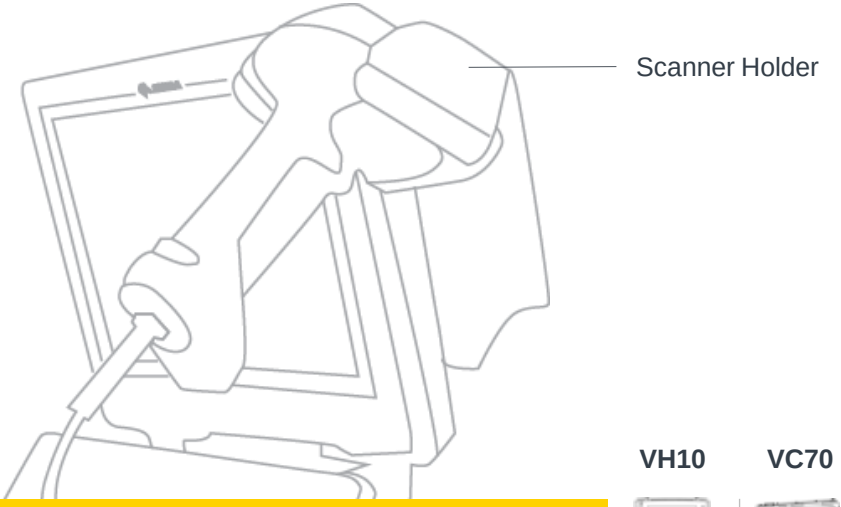


## SCANNER HOLDERS

| | | VH10 | VC70 | VC80 Series |
|---|---|---|---|---|
|  | **SCANNER HOLDER \| ID:** KT-SCANMNT-VC70-R<br>Mounting holder for the scanner. For LS34x8ER, LS35x8ER. Requires KT-ACCMNT-VC70-R Accessory side mount bracket | | • | |
|  | **ACCESSORY MOUNT \| ID:** KT-ACCMNT-VC70-R<br>Accessory side mount bracket | | • | |
|  | **SCANNER HOLDER \| ID:** 9008951<br>Thermotrax heated scanner holder with cable management system, 12 Volt, for LS/DS 34xx / 35xx | • | • | • |
|  | **SCANNER HOLDER \| ID:** 9008953<br>Thermotrax heated scanner holder with cable management system, 36-48 Volt, for LS/DS 34xx / 35xx | • | • | • |
|  | **SCANNER HOLDER \| ID:** 9008952<br>Thermotrax heated scanner holder with cable management system, 24 Volt, for LS/DS 34xx / 35xx | • | | • |
|  | **SCANNER HOLDER \| ID:** KT-SCANMNT-VC80-R<br>Side mounted holder for scanner | • | | • |



Zebra Confidential: For Internal Use Only

# STEP 4: KEYBOARDS

WHILE THE VH10 HAS A BUILT-IN KEYBOARD, THE VC70 AND VC80 Series GIVE YOU MULTIPLE OPTIONS.


**VC80 Series** KEYBOARDS ——— SLIDE 24

**VC70** KEYBOARDS ——— SLIDE 25

IKey KEYBOARDS ——— SLIDE 26


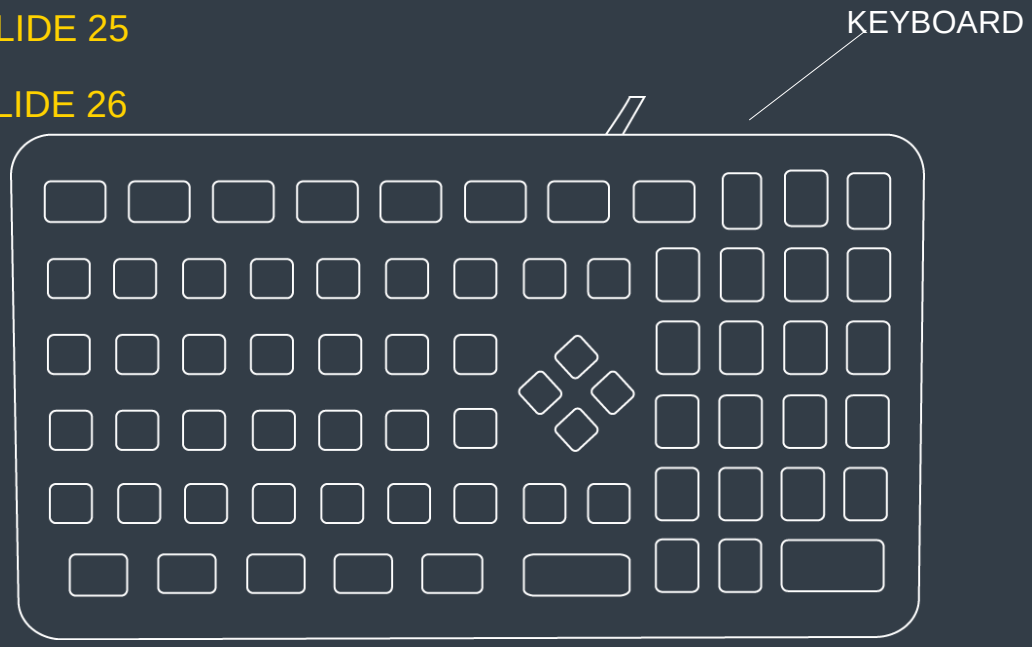




Zebra Confidential: For Internal Use Only

| VC80 Series | KEYBOARDS, CABLES AND MOUNTING OPTIONS |
|---|---|
|  | **KEYBOARD \| ID:** KYBD-AZ-VC-01<br>VC USB Keyboard AZERTY |
|  | **KEYBOARD \| ID:** KYBD-QW-VC80-S-1<br>USB Keyboard QWERTY with 22 cm cable for VC80/VC80x |
|  | **KEYBOARD \| ID:** KYBD-QW-VC80-L-1<br>USB Keyboard QWERTY with 300 cm cable for VC80/VC80x |
|  | **KEYBOARD CABLE \| ID:** CBL-VC80-KBUS1-01<br>22 cm VC80 Series USB cable for heated Keyboard |
|  | **KEYBOARD CABLE \| ID:** CBL-VC80-KBUS2-01<br>300 cm VC80 Series USB cable for heated Keyboard |
|  | **KEYBOARD \| ID:** KYBD-NU-VC70-03R<br>USB Keyboard QWERTY with 300 cm y-cable for VC70 Freezer |
|  | **KEYBOARD TRAY \| ID:** KT-KYBDTRAY-VC70-3<br>QWERTY/AZERTY Keyboard mounting tray. Includes tilting arms, knobs and screws. |
|  | **KEYBOARD SIDE MOUNT BRACKET \| ID:** KT-KYBDMNT-VC70-R<br>Function/Numeric keypad side mount bracket |

| VC70 | KEYBOARDS, CABLES AND MOUNTING OPTIONS |
|---|---|
|  | **KEYBOARD \| ID:** KYBD-AZ-VC-01<br>VC USB Keyboard AZERTY |
|  | **KEYBOARD \| ID:** KYBD-QW-VC70-S-1<br>USB Keyboard QWERTY with 18 cm cable for VC70 |
|  | **KEYBOARD \| ID:** KYBD-QW-VC70-L-1<br>USB Keyboard QWERTY with 300 cm cable for VC70 |
|  | **KEYBOARD \| ID:** KYBD-QW-VC70F-S-1<br>USB Keyboard QWERTY with 37 cm y-cable for VC70 Freezer |
|  | **KEYBOARD \| ID:** KYBD-QW-VC70F-L-1<br>USB Keyboard QWERTY with 300 cm y-cable for VC70 Freezer |
|  | **KEYBOARD CABLE \| ID:** CBL-VC70-KBUS1-01<br>18 cm VC70 USB cable for heated Keyboard |
|  | **KEYBOARD CABLE \| ID:** CBL-VC70-KBUS2-01<br>300 cm VC70 USB cable for heated Keyboard |
|  | **KEYBOARD CABLE \| ID:** CBL-VC70-KBUS4-01<br>37 cm VC70 USB & RS232 Y-cable for heated Keyboard |
|  | **KEYBOARD CABLE \| ID:** CBL-VC70-KBUS4-01<br>300 cm VC70 USB & RS232 Y-cable for heated Keyboard |
|  | **KEYBOARD \| ID:** KYBD-NU-VC70-03R<br>USB Keyboard QWERTY with 300 cm y-cable for VC70 Freezer |
|  | **KEYBOARD TRAY \| ID:** KT-KYBDTRAY-VC70-3<br>QWERTY/AZERTY Keyboard mounting tray. Includes tilting arms, knobs and screws. |
|  | **KEYBOARD SIDE MOUNT BRACKET \| ID:** KT-KYBDMNT-VC70-R<br>Function/Numeric keypad side mount bracket |

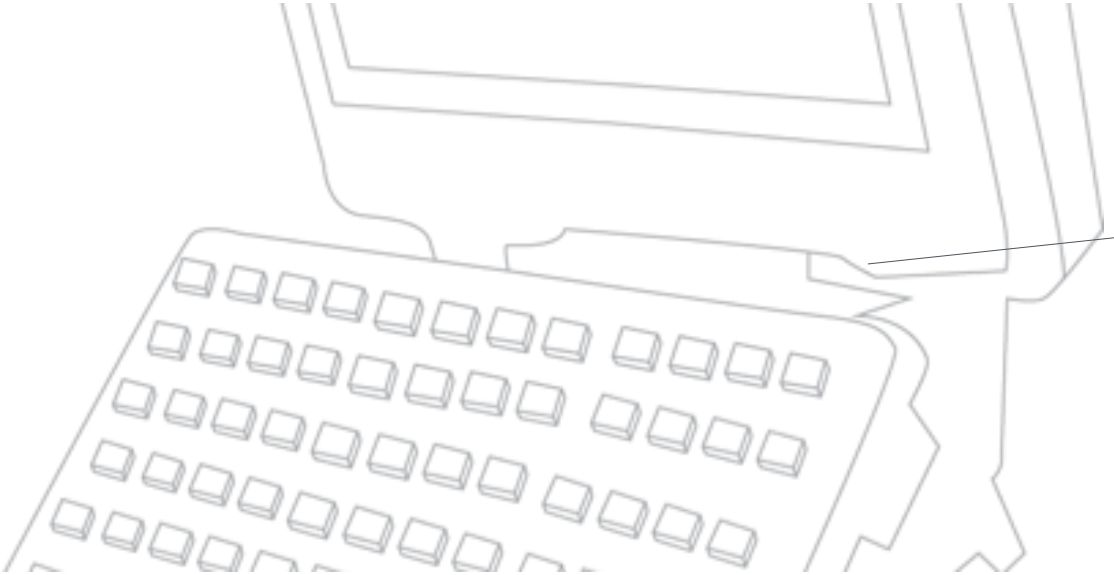


| VC70 & VC80 Series | iKey KEYBOARDS |
|---|---|
|  | **KEYBOARD** **\| ID:** 9010376<br>iKey Keyboard, English, backlight, USBCable - RS232: DB9 Female Connector, 9ft. (2.8m) Coiled, Power Pin 9, TxD |
|  | **KEYBOARD** **\| ID:** 9010377<br>iKey Keyboard, English, color, USB |
|  | **KEYBOARD** **\| ID:** SLK-101-M-USB-3F<br>iKey Keyboard, 101 keys (12 Function keys), large numeric pad, backlight, USB |



Zebra Confidential: For Internal Use Only

# STEP 5: ANTENNAS

YOUR OPTIONS OF ANTENNAS ARE WIDE: SLIDE 28

- WIFI – **VC70, VC80 Series & VH10**
- NARROWBAND – **VH10 ONLY**
- GPS – **VC80 Series ONLY**
- RIGHT-ANGLE ADAPTER FOR INSTALLATIONS WITH LITTLE OVERHEAD SPACE – **VC70, VC80 Series & VH10**




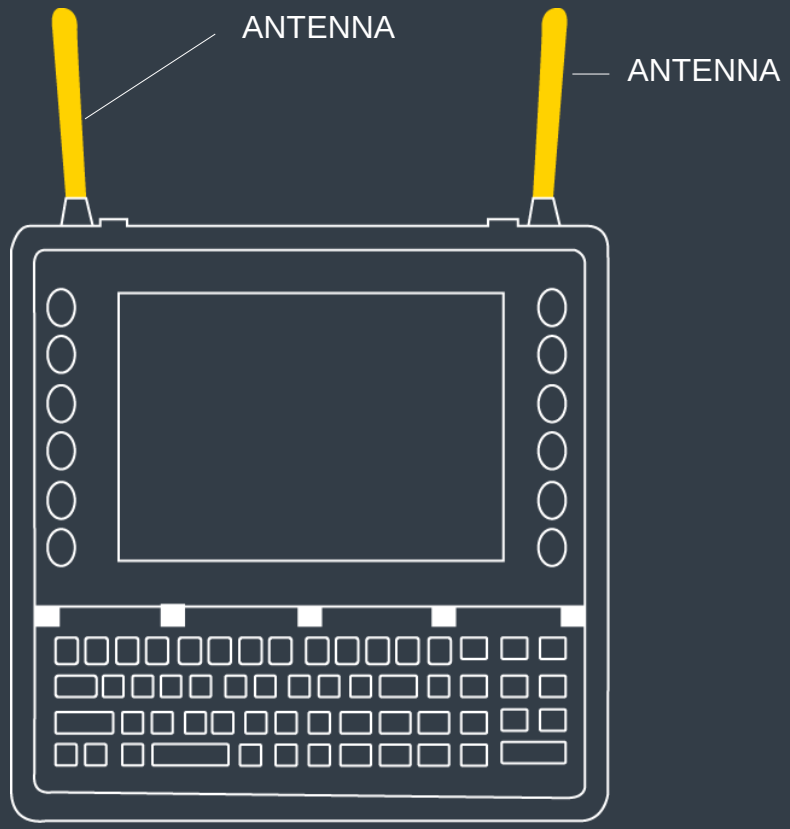




Zebra Confidential: For Internal Use Only

# HERE'S A LIST OF ANTENNAS AND CONNECTIVITY FOR YOU TO CHOOSE FROM

| | |
|---|---|
| **ALL VCS** | **ANTENNAS & CONNECTIVITY FOR WIFI** |
|  | **ANTENNA \| ID:** 20667-002<br>Whip antenna (stubby), 802.11 b/g - dipole 2 dBi reverse polarity SMA connector<br>Antenna, dual band, 802.11 a/b/g/n, 2 dBi, RPSMA connector, magnetic mount, 2.9m, WiFi |
|  | **ANTENNA \| ID:** AN2010<br>Antenna, dual band, 802.11 a/b/g/n, 2 dBi, RPSMA connector, magnetic mount, 2.9m, WiFi |
|  | **ANTENNA \| ID:** AN2020<br>Antenna, 2.4 GHz, 802.11 b/g, 5 dBi, RPSMA connector, magnetic mount, 2.9m |
|  | **ANTENNA \| ID:** AN2030<br>Whip antenna (stubby), dual band, 802.11 a/b/g/n, 2.4GHz 2dBi, 5GHz 3.7 dBi, RPSMA connector, WiFi |
| **VC70** | **ADAPTERS FOR VC70 TO ATTACH EXTERNAL WIFI ANTENNAS WITH RPSMA CONNECTOR** |
|  | **ADAPTER \| ID:** RPSMA-RTRPSMA-05R<br>ANTENNA ADAPTER RPSMA - RTRPSMA, 5-PACK, Required for the VC70 WiFi Antennas |
|  | **ADAPTER \| ID:** RPSMA-RTRPSMA-10R<br>ANTENNA ADAPTER RPSMA - RTRPSMA, 10-PACK, Required for the VC70 WiFi Antennas |


Zebra Confidential: For Internal Use Only

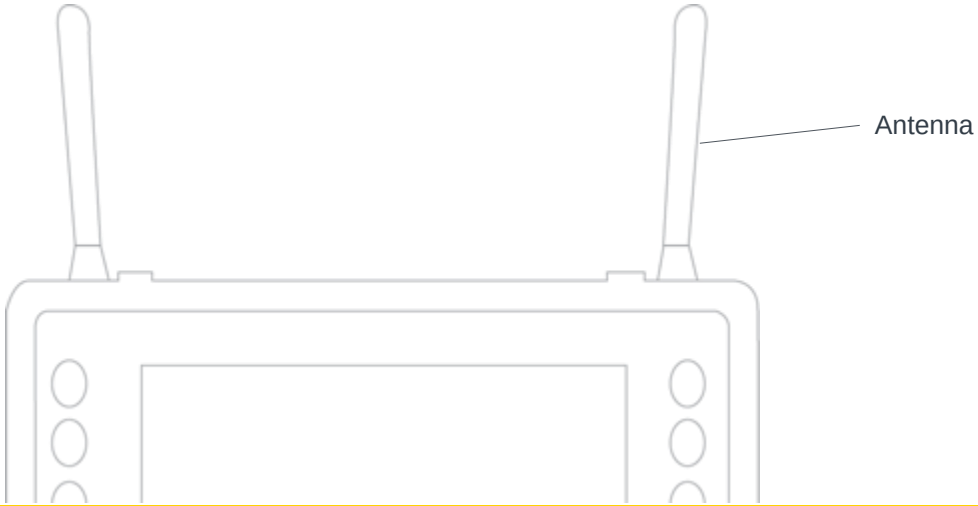


| | |
|---|---|
| **VH10** | **ANTENNAS & CONNECTIVITY FOR NARROWBAND** |
|  | **ANTENNA \| ID:** 9009801<br>Antenna, Narrow Band 1/4 wave, 406-512 MHz 6" NB |
|  | **MOUNT \| ID:** 9009792<br>Mount, Magnetic, for Narrowband, antenna, SMA, 12' cable |
| **VC80 / VC80x** | **ANTENNA FOR GPS** |
|  | **ANTENNA \| ID:** RPSMA-RTRPSMA-05R<br>GNSS antenna, magnetic mount, 2.9 m cable |
| **ALL VCS** | **RIGHT ANGLE ADAPTER FOR INSTALLATIONS WITH LITTLE SPACE OVERHEAD, ALL VCS** |
|  | **RIGHT ANGLE ADAPTER \| ID:** AR1000<br>Right Angle SMA reverse polarity plug-jack Adapter |



Zebra Confidential: For Internal Use Only

# STEP 6: VOICE

SELECT FROM TURNKEY KITS OR VOICE ACCESSORIES À LA CARTE.

YOUR VOICE OPTIONS —— SLIDE 31

- VOICE

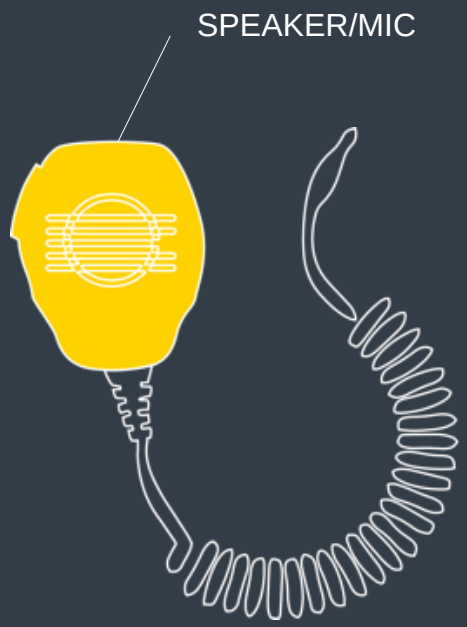


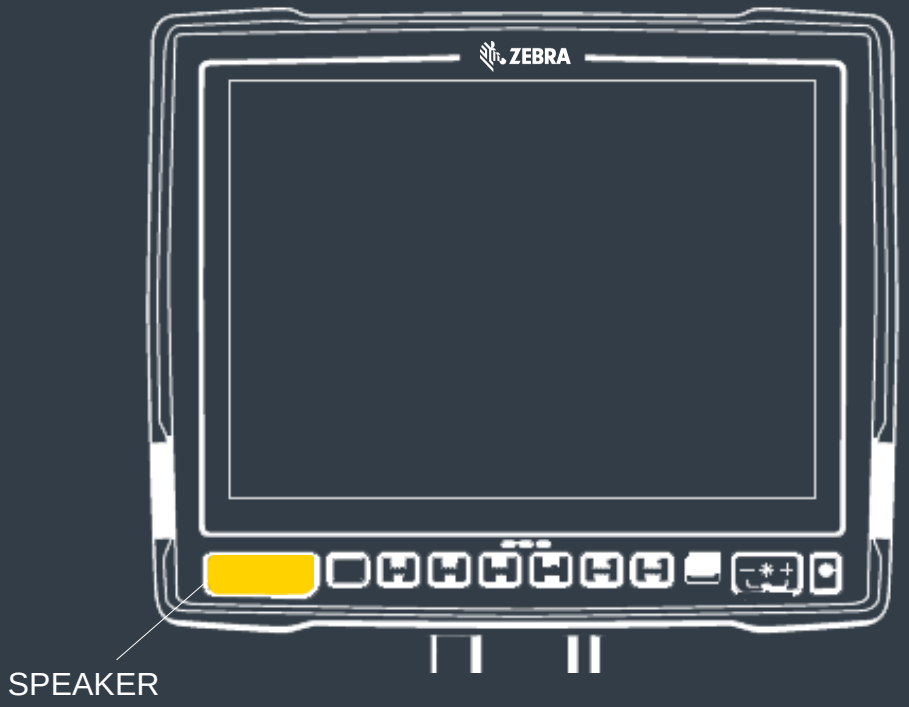




Zebra Confidential: For Internal Use Only

## VOICE

| | | VH10 | VC70 | VC80 Series |
|---|---|---|---|---|
| | **MICROPHONE KIT \| ID:** KT-MIC-01R<br>This bundle includes the VC70 External PTT mic, the Motorola HMN1089B Water-resistant Palm Microphone or equivalent and the KT-ACCMNT-VC70-R Accessory Side mount bracket. | | ● | |
|  | **MICROPHONE \| ID:** HMN1089B<br>Push-To-Talk Hand Microphone, GCAI connector, Water Resistant | | ● | |
|  | **SIDE MOUNT \| ID:** KT-ACCMNT-VC70-R<br>Accessory Side mount bracket | | ● | |
| | **SPEAKER KIT \| ID:** KT-SPKR-01R<br>This bundle includes the External speaker, the Motorola HSN4039A 13 Watt water-resistant loudspeaker and the 25-159552-01 VC70 external speaker adapter cable. | | ● | |
|  | **SPEAKER \| ID:** HSN4040A<br>External speaker, Motorola HSN4040A 13 Watt water-resistant loudspeaker. Requires 25-159552-01 | | ● | |
|  | **INTERFACE CABLE \| ID:** 25-159552-01<br>Speaker cable adapter, for HSN4040A, VC70. Required to connect the HSN4040A external speaker. | | ● | |
|  | **SPEAKER/MIC \| ID:** M1000<br>Speaker/Mic with push-to-talk function | ● | | ● |



Zebra Confidential: For Internal Use Only

# STEP 7: MISCELLANEOUS

DON’T FORGET TO CONSIDER THESE: SLIDE 33

- STYLUS
- SCREEN PROTECTOR
- CAN BUS CABLE
- USB TO ETHERNET ADAPTER

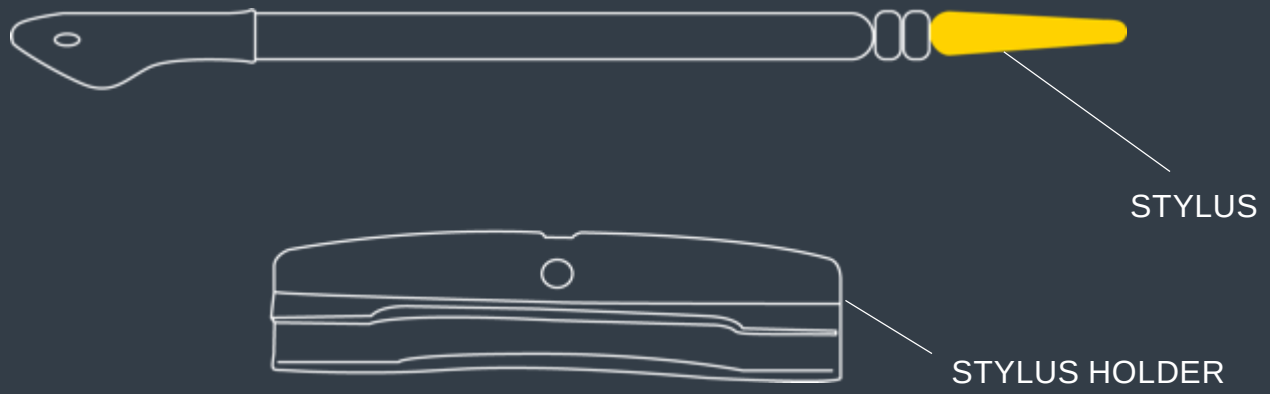




Zebra Confidential: For Internal Use Only

## MISCELLANEOUS

| | | VH10 | VC70 | VC80 Series |
|---|---|---|---|---|
|  | **ID:** SL0001<br>Stylus and Stylus Holder | ● | ● | ● |
|  | **ID:** VA6200<br>Screen Protector Pack of 3 | ● | | |
|  | **ID:** KT-SPRTCT-VC70-05R<br>Screen Protector Pack of 5 | | ● | ● |
|  | **ID:** CA1300<br>Screen blanking cable (DB9 to open wires) | ● | | ● |
|  | **ID:** CB-000433-01<br>CAN Bus Cable (RJ45 to Deutsch) | | | ● |
|  | **ID:** WA4070<br>USB to Ethernet Adapter | ● | | |
|  | **ID:** 25-159547-01<br>Cable DB15M to DB9M, for COM2 | | ● | |
|  | **ID:** SG-VC70-VISR1-01<br>VC70 Sun Visor mountable with cut out wing. | | ● | |



Zebra Confidential: For Internal Use Only

# STEP 8: SERVICE PARTS

STOCK UP ON THESE ESSENTIAL SPARE PARTS: SLIDE 35

- TOOL KIT
- KEYPADS
- TOUCH SCREENS
- SPARE BATTERY

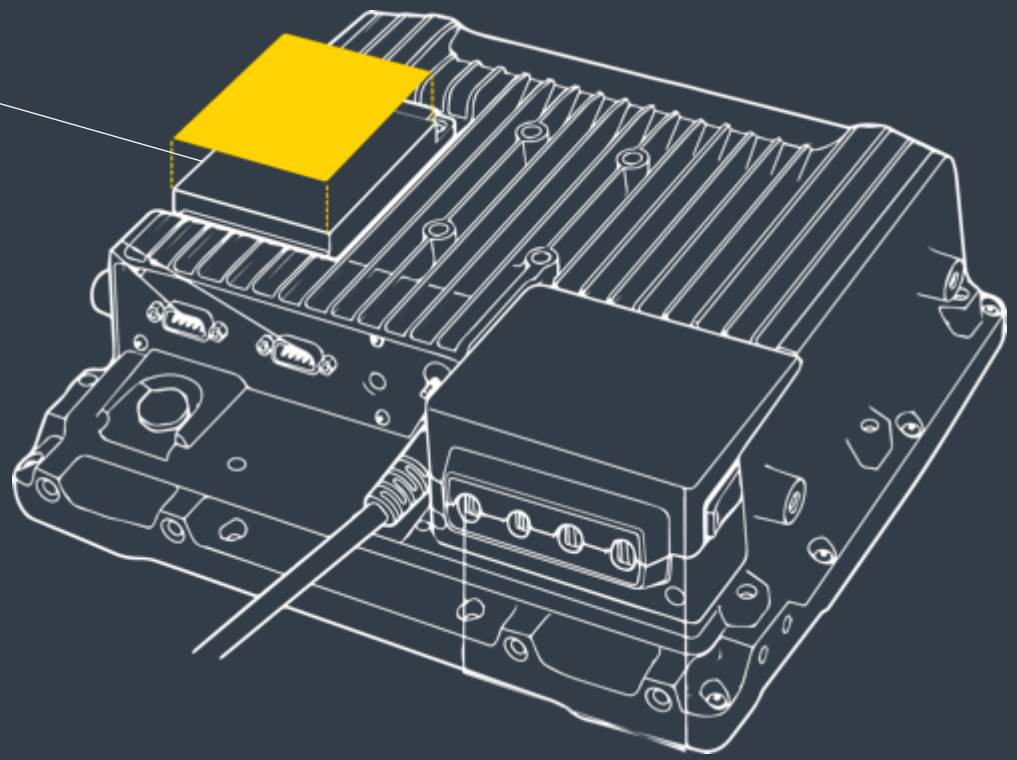



Zebra Confidential: For Internal Use Only

## SERVICE PARTS

| | | VH10 | VC70 | VC80 Series |
|---|---|---|---|---|
| | **ID:** AL1001<br>QWERTY Keypad | ● | | |
| | **ID:** AL1002<br>AZERTY Keypad | ● | | |
| | **ID:** AL2002<br>Front with standard touch screen and function keys | ● | | |
| | **ID:** AL2002<br>Front with heated touch screen and function keys | ● | | |
|  | **ID:** ST2000<br>Modular Services Kit | ● | | ● |
| | **ID:** KT-VC80-BTRY1-01<br>Spare Battery | | | ● |
| | **ID:** KT-VC80-SCRH1-01<br>Front with Touch Screen (heated) | | | ● |
| | **ID:** KT-VC80-SCRN1-01<br>Front with Touch Screen (non-heated) | | | ● |
|  | **ID:** BTRY-VC70IAB00<br>Spare Battery | | ● | |
| | **ID:** KYBD-QW-VC-01<br>QWERTY Spare Elastomer for VC USB Keyboard | | ● | ● |
| | **ID:** KYBD-AZ-VC-01<br>AZERTY Spare Elastomer for VC USB Keyboard | | ● | ● |



Zebra Confidential: For Internal Use Only