L61472WDBI

EN **User Manual**
Washer Dryer

USER MANUAL

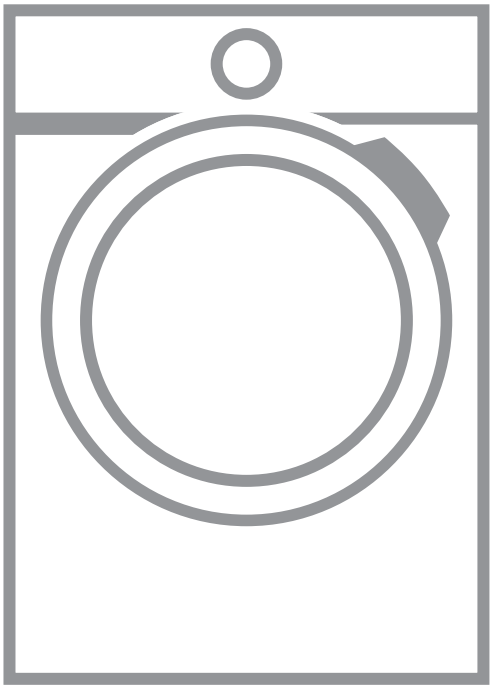

AEG

CONTENTS

1. SAFETY INFORMATION....3
2. SAFETY INSTRUCTIONS....6
3. PRODUCT DESCRIPTION....7
4. CONTROL PANEL....9
5. PROGRAMMES....11
6. CONSUMPTION VALUES....14
7. OPTIONS....14
8. SETTINGS....15
9. BEFORE FIRST USE....16
10. DAILY USE....16
11. DAILY USE - DRYING ONLY....18
12. DAILY USE - WASHING & DRYING....19
13. HINTS AND TIPS....20
14. CARE AND CLEANING....22
15. TROUBLESHOOTING....26
16. INSTALLATION....28
17. TECHNICAL DATA....37

FOR PERFECT RESULTS

Thank you for choosing this AEG product. We have created it to give you impeccable performance for many years, with innovative technologies that help make life simpler features you might not find on ordinary appliances. Please spend a few minutes reading to get the very best from it.
Visit our website for:

Get usage advice, brochures, trouble shooter, service information:
www.aeg.com/webselfservice

Register your product for better service:
www.registeraeg.com

Buy Accessories, Consumables and Original spare parts for your appliance:
www.aeg.com/shop

CUSTOMER CARE AND SERVICE

Always use original spare parts.
When contacting our Authorised Service Centre, ensure that you have the following data available: Model, PNC, Serial Number.
The information can be found on the rating plate.

⚠ Warning / Caution-Safety information

ⓘ General information and tips

Environmental information

Subject to change without notice.

1. ⚠ SAFETY INFORMATION

Before the installation and use of the appliance, carefully read the supplied instructions. The manufacturer is not responsible for any injuries or damages that are the result of incorrect installation or usage. Always keep the instructions in a safe and accessible location for future reference.

1.1 Children and vulnerable people safety

⚠ **WARNING!**
Risk of suffocation, injury or permanent disability.

- This appliance can be used by children aged from 8 years and above and persons with reduced physical, sensory or mental capabilities or lack of experience and knowledge if they have been given supervision or instruction concerning the use of the appliance in a safe way and understand the hazards involved.
- Children between 3 and 8 years of age and persons with very extensive and complex disabilities shall be kept away unless continuously supervised.
- Children of less than 3 years of age should be kept away unless continuously supervised.
- Do not let children play with the appliance.
- Keep all packaging away from children and dispose of it appropriately.
- Keep detergents away from children.
- Keep children and pets away from the appliance when the door is open.
- If the appliance has a child safety device, it should be activated.
- Children shall not carry out cleaning and user maintenance of the appliance without supervision.

1.2 General Safety

- Do not change the specification of this appliance.

- The appliance shall be installed as a freestanding product or below the kitchen worktop if space margins permit.
- Do not install the appliance behind a lockable door, a sliding door or a door with a hinge on the opposite side, that would prevent the appliance door from being fully open.
- Connect the mains plug to the mains socket only at the end of the installation process. Make sure that the mains plug is accessible after installation.
- The ventilation opening in the base must not be covered by a carpet, mat, or any floor covering.
- WARNING: The appliance must not be supplied through an external switching device, such as a timer, or connected to a circuit that is regularly switched on and off by a utility.
- Ensure good air ventilation in the room where the appliance is installed to avoid the backflow of unwanted gases into the room from appliances burning gas or other fuels, including open fires.
- Exhaust air must not be discharged into a flue which is used for exhausting fumes from any appliances burning gas or other fuels.
- The operating water pressure at the water entry point from the outlet connection must be between 0.5 bar (0.05 MPa) and 8 bar (0.8 MPa).
- Do not exceed the maximum load of 7 kg (refer to the "Programme chart" chapter).
- The appliance must be connected to the water mains using the new supplied hose sets, or other new hose sets supplied by the Authorised Service Centre.
- Old hose sets must not be reused.
- If the mains power supply cable is damaged, it must be replaced by the manufacturer, its Authorised Service Centre or similarly qualified persons to avoid an electrical hazard.
- Wipe away lint or packaging debris that has accumulated around the appliance.

- Items that have been soiled with substances such as vegetable or mineral oil, acetone, alcohol, petrol, kerosene, spot removers, turpentine, waxes and wax removers should be washed separately with an extra amount of detergent before being dried in the washer dryer.
- Do not use the appliance if items have been soiled with industrial chemicals.
- Do not dry unwashed items in the wash dryer.
- Items such as foam rubber (latex foam), shower caps, waterproof textiles, and rubber backed articles and clothes, or pillows fitted with foam rubber pads should not be dried in the washer dryer.
- Fabric softeners, or similar products, should only be used as specified by the product manufacturer's instructions.
- Remove all objects from items that could be a source of fire ignition such as lighters or matches.
- Never stop the washer dryer before the end of the drying cycle unless all items are quickly removed and separated so that residual heat can dissipate.
- The final part of the washer dryer cycle takes place without heat (cool down cycle) to ensure that items reach a temperature that will not cause damage to them.
- Do not use high pressure water sprays and/or steam to clean the appliance.
- Clean the appliance with a moist cloth. Use only neutral detergents. Do not use abrasive products, abrasive cleaning pads, solvents or metal objects.
- Before any maintenance operation, deactivate the appliance and disconnect the mains plug from the socket.

2. SAFETY INSTRUCTIONS

2.1 Installation

The installation must comply with relevant national regulations.

- Follow the installation instructions supplied with the appliance.
- Do not install or use the appliance where the temperature can be less than 0°C or where it is exposed to the weather.
- Always keep the appliance vertical when it is being moved.
- Make sure that there is air circulation between the appliance and the floor.
- Remove all the packaging and the transit bolts.
- The floor area on which the appliance is to be installed must be flat, stable, heat resistant and clean.
- Keep the transit bolts in a safe place. If the appliance is to be moved in the future they must be reattached to lock the drum to prevent an internal damage.
- Always take care when moving the appliance as it is heavy. Always use safety gloves and enclosed footwear.
- Do not install or use a damaged appliance.
- Do not install the appliance where the appliance door cannot be fully opened.
- Adjust the feet to have the necessary space between the appliance and the flooring.
- When the appliance is in its permanent position, check if it is levelled correctly with the aid of a spirit level. If it is not, adjust the feet accordingly.

2.2 Electrical Connection

WARNING!
Risk of fire and electric shock.

- The appliance must be earthed.
- Always use a correctly installed shockproof socket.
- Do not use multi-plug adapters and extension cables.
- Do not pull the mains cable to disconnect the appliance. Always pull the mains plug.
- Do not touch the mains cable or the mains plug with wet hands.
- UK and Ireland only. This appliance is fitted with a 13 A mains plug. If it is necessary to change the mains plug fuse, use only a 13 A ASTA (BS 1362) fuse.
- This appliance complies with the E.E.C. Directives.

2.3 Water Connection

- Do not cause damage to the water hoses.
- Before connection to new pipes, pipes not used for a long time, where repair work has been carried out or new devices fitted (water meters, etc.), let the water flow until it is clean and clear.
- Ensure that there are no visible water leaks during and after the first use of the appliance.

2.4 Use

WARNING!
Risk of injury, electric shock, fire, burns or damage to the appliance.

- This appliance is for household use only.
- Do not put flammable products or items that are wet with flammable products in, near or on the appliance.
- Do not touch the glass door while a programme is in operation. The glass can get hot.
- Do not dry damaged (torn, frayed) items that contain padding or fillings.
- If laundry has been washed with a stain remover, carry out an additional rinse cycle before starting a drying cycle.
- Make sure that all metal objects are removed from the laundry.
- Only dry fabrics that are suitable to dry in the washer dryer. Follow the cleaning instruction on the item label.
- Plastic items are not heat resistant.

– If a detergent ball is used, remove it before starting a drying programme.
– Do not use a detergent ball if setting a non-stop programme.

WARNING!
Risk of injury or damage to the appliance.

- Do not sit or stand on the open door.
- Do not dry dripping wet clothes in the appliance.

2.5 Disposal

- Disconnect the appliance from the mains electrical and water supplies.
- Cut off the mains electrical cable close to the appliance and dispose of it.
- Remove the door catch to prevent children or pets from becoming trapped in the drum.
- Dispose of the appliance in accordance with local requirements for the disposal of Waste Electrical and Electronic Equipment (WEEE).

3. PRODUCT DESCRIPTION

3.1 Appliance overview

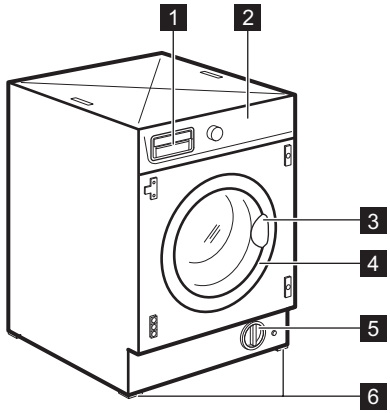

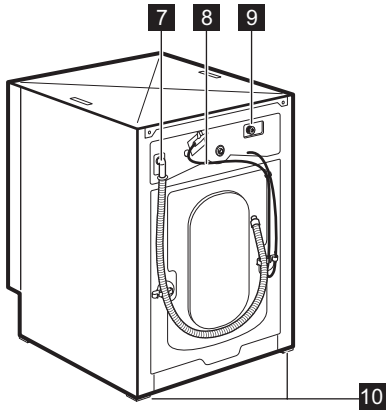

1 Detergent dispenser
2 Control panel
3 Door handle
4 Rating plate
5 Drain pump filter
6 Feet for levelling the appliance
7 Water drain hose
8 Mains cable
9 Water inlet hose connection
10 Feet for levelling the appliance

3.2 Accessories

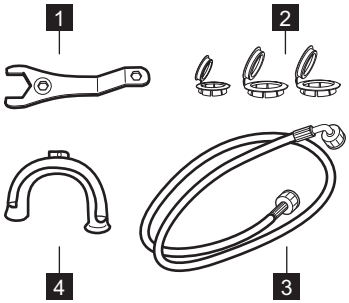

1 **Spanner**
To remove the transit bolts.

2 **Plastic caps**
To close the holes on the rear side of the cabinet after the removal of the transit bolts.

3 **Inlet Hose**
To connect the appliance to the water tap.

4 **Plastic hose guide**
To connect the drain hose on the edge of a sink.

3.3 How to activate the child safety device

This device prevents children or pets from being closed in the drum.

Turn the device clockwise, until the groove is horizontal.
You cannot close the door.

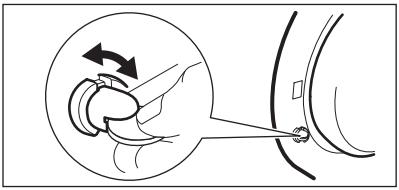

To close the door, turn the device anticlockwise until the groove is vertical.

3.4 Installation on suspended flooring

Suspended wooden floors are particularly susceptible to vibration.

To limit vibration we recommend placing a waterproof wooden panel, at least 15 mm thick, under the appliance. It should be screwed to at least 2 floor beams and should extend beyond the front feet.

If possible, install the appliance where the floor is more stable.

4. CONTROL PANEL

4.1 Control panel description

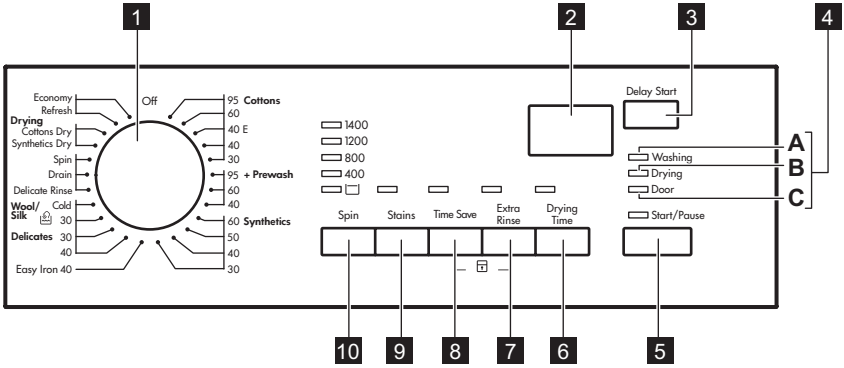

1 Programme knob
2 Display
3 Delay start button (Delay Start)
4 Phase indicators:
- A - Washing phase (Washing)
- B - Drying phase (Drying)
- C - Door locked (Door)

5 Start/Pause button (Start/Pause)
6 Drying time button (Drying Time)
7 Extra rinse button (Extra Rinse)
8 Time saving button (Time Save)
9 Stain button (Stains)
10 Spin button (Spin)

4.2 Display

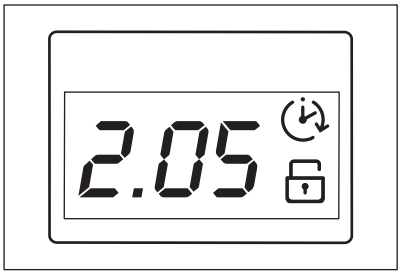

The display shows the following information:

2.05	**Duration of the set programme** When you set a programme, the display shows the duration in hours and minutes (for example **2.05**). The duration is calculated automatically on the maximum load for each type of fabric. After the programme has started, the time remaining is updated every minute.
	Set drying time When you set a drying programme, the display shows the drying time in minutes and/or hours (see paragraph «Programmes for timed drying »). After the programme has started, the appliance updates the remaining time every minute.
	Alarm codes In the event of operating problems, some alarm codes can be displayed, for example E20 (see chapter «Troubleshooting»).
	End of programme When the programme has finished, the display shows a blinking zero 0. The Door light **C**, the Washing light **A** (or the Drying light **B**) and the light of button Start/Pause go out. The door can be opened.
	Incorrect option selection If you set an option which is not compatible with the wash programme, the display shows the message **Err** for some seconds. The yellow pilot light of button Start/Pause light starts blinking.
	Delay Start When you press the relevant button to set the delay (20 hours max), it appears for some seconds, then the display shows the duration of the set programme. The delay time value decreases by one unit every hour. When only 1 hour remains, the time decreases every minute.
	**Delay Start symbol** This symbol comes on when you set the delay time.
	**Child safety lock** This symbol comes on when you activate the child lock function.

4.3 Phase indicators

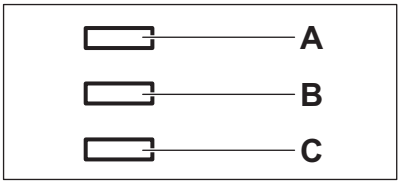

After you have pressed the button Start/Pause, the Washing (**A**) indicator comes on.
The appliance is operating.
When you set a drying programme, the Drying (**B**) indicator illuminates and stays on during the drying phase.
The Door (**C**) indicator indicates when the door can be opened:

- light on: the door cannot be opened.
- light blinking: the door is opening in some minutes.
- light off: the door can be opened.

5. PROGRAMMES

5.1 Programme Chart

Programme Temperature range	Maximum load Maximum spin speed	Programme description (Type of load and soil level)
Washing programmes		
Cottons 95°C - 30°C	7 kg 1400 rpm	**White cotton and coloured cotton**. Normal, heavy and light soil.
E Economy 40°C	7 kg 1400 rpm	**Colour-fast cotton**. Light soil. The energy consumption decreases and the time of the washing programme is extended.
Cottons + Prewash 95°C - 40°C	7 kg 1400 rpm	**White cotton and coloured cotton**. Heavy soil and normal soil.
Synthetics 60°C - 30°C	3 kg 1200 rpm	**Synthetic items or mixed fabric items**. Normal soil.
Easy Iron 40°C	1.5 kg 1200 rpm	**Synthetic items requiring a gentle wash**. Normal and light soil.[1)]
Delicates 40°C - 30°C	3 kg 1200 rpm	**Delicate fabrics such as acrylics, viscose and mixed fabrics requiring gentler washing**. Normal soil.
Wool/Silk 30°C - Cold	2 kg 1200 rpm	**Machine washable wool, hand washable wool and other fabrics** with «hand washing» care symbol[2)].

Programme Temperature range	Maximum load Maximum spin speed	Programme description (Type of load and soil level)
Delicate Rinse Cold	3 kg 1200 rpm	To rinse and spin the laundry. **All fabrics**, except woollens and very delicate fabrics. Reduce the spin speed accordingly to the type of laundry.
Drain	7 kg	To drain the water in the drum. **All fabrics**.
Spin	7 kg 1400 rpm	To spin the laundry and to drain the water in the drum. **All fabrics, except woollens and delicate fabrics**.
Synthetics Dry	2 kg	Drying programme for **synthetic items**.
Cottons Dry	4 kg	Drying programme for **cotton items**.
Refresh 30°C	3 kg 1200 rpm	A very short cycle for **cotton and synthetic items with light soil level** or worn only once.
Economy[3)] 60°C	7 kg 1400 rpm	**White cotton and fast-coloured cotton**. Normal soil. The energy consumption decreases and the time of the washing programme is extended.

1) To reduce creasing, this cycle regulates the water temperature and performs a soft wash and spin phase. The appliance adds some rinses.

2) During this cycle the drum rotates slowly to ensure a gentle wash. It can seem that the drum doesn't rotate or doesn't rotate properly, but this is normal for this programme.

3) **Cottons energy saving programme**. This programme at 60°C with a load of 7 kg is the reference programme for data entered in the energy label, in compliance with EEC 92/75 standards. Set this programme to have a good washing results and decrease the energy consumption. The time of the washing programme is extended.

Programme options compatibility

Programme	Spin		Stains 1)	Time Save 2)	Extra Rinse	Delay Start
Cottons	■	■	■	■	■	■
Economy	■	■	■	■3)	■	■
Cottons + Prewash	■	■		■	■	■

Programme	Spin		Stains [1]	Time Save [2]	Extra Rinse	Delay Start
Synthetics	■	■	■	■	■	■
Easy Iron	■	■			■	■
Delicates	■	■	■	■	■	■
Wool/Silk	■	■				■
Delicate Rinse	■	■			■	■
Drain						
Spin	■					■
Refresh	■					■
Economy	■	■	■	■[3]	■	■

[1] The Stain option is not available with a temperature lower than 40 °C.

[2] If you set the shortest duration, we recommend that you decrease the load size. It is possible to fully load the appliance, however the washing results can be less satisfactory.

[3] With these programmes you can set only the shorter duration.

5.2 Programmes for timed drying

Dryness Level	Type of fabric	Load (kg)	Spin speed (rpm)	Suggested duration (mins)
Extra Dry For towelling materials	**Cottons and Linen** (bathrobes, bath towels, etc)	4	1400	215 - 220
		3	1400	160 - 180
		1.5	1400	95 - 105
Cupboard Dry[1] For items to be stored	**Cottons and Linen** (bathrobes, bath towels, etc)	4	1400	205 - 210
		3	1400	150 - 170
		1.5	1400	85 - 95
Cupboard Dry For items to be stored	**Synthetics and mixed fabrics** (jumpers, blouses, underwear, household and bed linen)	2	1200	90 - 100
		1	1200	55 - 65

Dryness Level	Type of fabric	Load (kg)	Spin speed (rpm)	Suggested duration (mins)
Iron Dry Suitable for ironing	**Cottons and Linen** (sheets, tablecloths, shirts, etc)	4	1400	140 - 150
		3	1400	90 - 100
		1.5	1400	60 - 70

1) **Hints for test institute**. The test performance, in accordance with EN 50229:2015, must be carried out with a FIRST drying load of the maximum declared drying capacity by setting 200 minutes by means of the Drying Time button for the Cottons Dry programme. The SECOND drying load with the residual load must be tested by setting 120 minutes by means of the Drying Time button for the Cottons Dry programme.

6. CONSUMPTION VALUES

Stated values are obtained in laboratory conditions with relevant standards. Different causes can change the data: the quantity and type of laundry and ambient temperature. Water pressure, the supply voltage and the temperature of inlet water may also affect the washing programme duration.

Technical specifications may be changed without prior notice to improve the quality of product.

Programmes	Load (kg)	Energy consumption (kWh)	Water consumption (litre)	Approximate programme duration (minutes)
Cottons 60°C	7	1.35	67	150
Economy Cotton Energy Saving Programme 60°C[1)]	7	1.10	57	220
Cottons 40°C	7	0.85	67	140
Synthetics 40°C	3	0.55	42	90
Delicates 40°C	3	0.55	63	65
Wool/Handwash 30°C	2	0.25	55	60

1) «Cotton Energy Saving programme » at 60°C with a load of 7kg is the reference programme for the data entered in the energy label, in compliance with EEC 92/75 standards.

7. OPTIONS

7.1 Spin

With this option you can decrease the default spin speed.

The indicator of the set speed comes on.

Additional spin options:

Rinse Hold

- Set this option to prevent the laundry creases.
- The relevant indicator comes on.
- The washing programme stops with the water in the drum. The drum turns regularly to prevent the laundry creases.
- The door stays locked. You must drain the water to unlock the door.

To drain the water refer to 'At the end of the programme'.

7.2 Stains

Set this option to add the stain phase to a programme.

Use this option for laundry with hard stains to remove.

When you set this option, put the stain remover into compartment II.

This option increases the programme duration. This option is not available with a temperature lower than 40 °C.

7.3 Time Save

With this option you can decrease the programme duration.

- Press this button one time to set 'Shortened duration' for items with daily soil.
- Press this button two times to set 'Extra Quick' for slightly soiled items only.

Some programmes accept only one of the two options.

7.4 Extra Rinse

With this option you can add some rinses to some washing programmes, refer to "Programme chart".

Use this option for persons allergic to detergents and in areas where the water is soft.

The related indicator comes on.

7.5 Delay Start

With this option you can delay the start of a programme from 30 minutes to 20 hours.

The display shows the related indicator and delay time.

8. SETTINGS

8.1 Acoustic signals

The acoustic signals operate when:

- You activate the appliance.
- You deactivate the appliance.
- You press the buttons.
- The programme is completed.
- The appliance has a malfunction.

To **deactivate/activate** the acoustic signals, press Stains and Time Save at the same time for 6 seconds.

If you deactivate the acoustic signals, they continue operate when the appliance has a malfunction.

8.2 Child Lock

With this option you can prevent that the children play with the control panel.

- To **activate/deactivate** this option, press Time Save and Extra Rinse at the same time until the indicator **comes on/goes off**.

You can activate this option:

- After you press Start/Pause : the options and the programme knob are locked.
- Before you press Start/Pause : the appliance cannot start.

9. BEFORE FIRST USE

1. Connect the mains plug to the mains socket.
2. Open the water tap.
3. Put 2 litre of water in the detergent compartment for washing phase.

This activates the drain system.

4. Put a small quantity of detergent in the compartment for washing phase.
5. Set and start a programme for cotton at the highest temperature without laundry.

This removes all possible dirt from the drum and the tub.

10. DAILY USE

10.1 Loading the laundry

1. Open the appliance door.
2. Put the laundry in the drum, one item at a time.
3. Shake the items before you put them in the appliance.

Make sure you do not put too much laundry in the drum.

4. Close the door firmly.

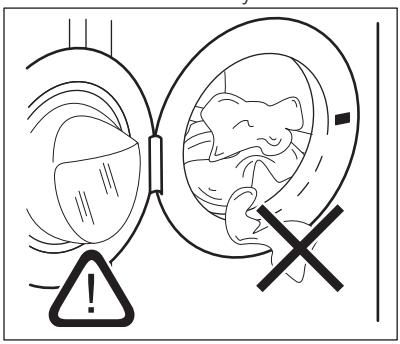

CAUTION!
Make sure that no laundry becomes trapped between the seal and the door. There is a risk of water leakage or damage to the laundry.

10.2 Filling the detergent and additives

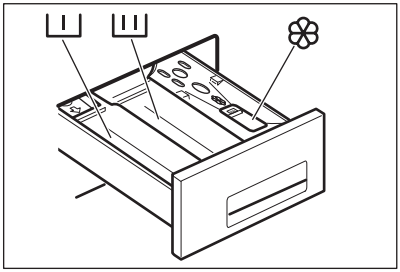

Compartment for prewash phase, soak programme or stain remover.

Compartment for washing phase.

Compartment for liquid additives (fabric conditioner, starch).

MAX Maximum level for quantity of liquid additives.

Flap for powder or liquid detergent.

Always follow the instructions that you find on the packaging of the detergent products.

10.3 Setting a programme

Turn the programme selector dial to the required programme.

The programme dial determines the type of washing cycle (e.g. water level, drum movement, number of rinses) and the washing temperature according to the type of laundry.

The indicator of Start/Pause button starts flashing.

The programme dial can be turned either clockwise or anticlockwise.

Off = Reset programme/switching OFF of the appliance

If you turn the programme dial to another programme when the appliance is working, the yellow indicator of Start/Pause button flashes 3 times. The display shows the message **Err** to indicate a wrong selection. The appliance does not perform the newly selected programme.

10.4 Starting the programme

Press button Start/Pause to start the programme. The corresponding red indicator stops blinking.

The indicator Washing is on to indicate that the appliance starts operating.

The indicator Drying is on to indicate the door is locked.

If you have chosen a delayed start with button Delay Start, the appliance will begin the countdown.

If you set an incorrect option, the yellow indicator of button Start/Pause blinks for 3 times. The display shows the message **Err** for some seconds.

10.5 Starting a programme with the delay start

Set this option after you have set the programme and before you press button Start/Pause.**Before you start the programme**, if you wish to delay the programme start, press button Delay Start repeatedly, to set the desired delay.

The symbol appears on the display. The wash programme can be delayed from 30 min. - 60 min. - 90 min., 2 hours and then by 1 hour up to a maximum of 20 hours.

The set delay time value appears on the display for about 3 seconds, then the duration of the programme appears again.

You can modify or cancel the delay time at any moment, before you press button Start/Pause.

The door will be locked throughout the delay time. If you wish to add laundry in the appliance during the delay time, press the button Start/Pause to set the appliance to pause. When the indicator Door goes off , the door can be opened. Add the laundry, close the door and press button Start/Pause again.

Setting the delayed start.

- Set the programme and the required options.
- Set the delay start.
- Press button Start/Pause: the appliance starts its hourly countdown. The programme starts after the selected delay has expired.

Cancelling the delayed start

- Press button Start/Pause to set the appliance to PAUSE;
- Press button Delay Start until the symbol ' 0 ' is displayed;
- Press button Start/Pause again to start the programme.

The set delay can be changed only after you have set the washing programme again.

The Delay Start **cannot** be set with Drain programme.

10.6 Altering an option or a running programme

It is possible to change some options before the programme operate. Before you make any change, you must press Start/Pause button to pause the appliance.

Changing a running programme is possible **only by resetting it**.

Turn the programme dial to Off and then to the new programme position.

Press Start/Pause button again to start the new programme. The washing water in the tub will not be drained.

10.7 Interrupting a programme

Press Start/Pause button to interrupt a programme which is running, the corresponding indicator starts flashing. Press Start/Pause button again to restart the programme.

10.8 Cancelling a running programme

Turn the selector dial to Off to cancel a programme which is running. Now you can select a new programme.

Before starting the new programme the appliance could drain the water. In this case, make sure that the detergent is still in the detergent compartment, if not fill the detergent again.

10.9 Opening the door

When the appliance is working and through the delay time, the door is locked.

If, for any reason, it is necessary to open it, firstly press button Start/Pause to set the machine to pause.

If the indicator Door after a few minutes goes off, the door can be opened.

If the indicator Door stays on and the door remains locked, this means that the appliance is already heating or that the water level is too high. In this case the door cannot be opened.

If you cannot open the door but you need to open it, turn the programme dial to Off to switch the appliance off. After a few minutes the door can be opened **(pay attention to the water level and temperature !)** .

After closing the door, it is necessary to set the programme and the options again. Press button Start/Pause to start the programme again.

10.10 At the end of the programme

The appliance stops automatically. The indicator of button Start/Pause, the indicators Washing and Door go off. A blinking 0 will appear on the display.

If you have set a programme or an option that ends with water in the tub, the indicator Door remains on. The door is locked. The water must be emptied out before opening the door. During this time the drum continues to turn at regular intervals until water drain.

Follow the below instructions to empty out the water:

- Turn the programme selector dial to Off.
- Set the DRAIN or SPIN programme.
- Reduce the spin speed, if needed.
- Press button Start/Pause.
- When the programme has finished the display shows a blinking 0 . The indicator Door goes off. The door can be opened.

Turn the programme selector dial to Off to switch the appliance off.

Remove the laundry from the drum and carefully check that the drum is empty. If you do not intend to carry out another wash, close the water tap. Leave the door open to prevent the formation of mildew and unpleasant smells.

10.11 Stand by

Once the programme has finished, after a few minutes the energy saving system will activate. The display will dim. Press any button to deactivate the Stand By function.

11. DAILY USE - DRYING ONLY

WARNING!
Refer to Safety chapters.

This appliance is an automatic washer dryer.

11.1 Drying setting

The recommended load size is 4 kg for cottons and linen, and 2 kg for synthetic items.

1. Load the laundry one item at a time.
2. Turn the programme dial to the programme applicable for the items to dry (cottons or synthetics).

To have a good drying performance **do not** exceed the maximum drying loads recommended in the user manual. **Do not** set a spin speed lower than the automatic speed of the set programme.

11.2 Timed drying

1. Press the button Drying Time again and again to set the time value (see the «Programmes for timed drying» table).
   - Each time you press this button the time value increases by 5 minutes.
   - As the appliance calculates also the duration of the anti-crease and the cooling phases, the programme time will automatically increase by some minutes.
2. Press Start/Pause button to start the programme.
   - The display shows regularly a new time value.
   - The indicator is on.

If you set only 10 minutes of drying, the appliance performs only a cooling phase.

If the laundry is not sufficient dry, set again a short drying time.

11.3 End of the drying programme

The appliance stops automatically.

- The acoustic signals operate (if they are active).
- In the display 0 comes on.
- The indicator of the Start/Pause button goes off.
- The last minutes of the drying cycle the appliance performs a cooling and anti-crease phase. The door is still locked. The display show a flashing 0.

When the door locked indicator goes off, you can open the door.

1. Turn the programme knob to Off position to deactivate the appliance.

After some minutes from the end of the programme, the energy saving function automatically deactivates the appliance.

2. Remove the laundry from the appliance.

Make sure that the drum is empty.

3. Keep the door ajar, to prevent mildew and odours.
4. Close the water tap.

12. DAILY USE - WASHING & DRYING

WARNING!
Refer to Safety chapters.

This appliance is an automatic washer dryer.

12.1 Non-Stop programme (Automatic washing & drying)

For NON-STOP programme the recommended load size is 4 kg for cotton and 2 kg for synthetic.

CAUTION!
Do not use a dosing device/ball when carrying out a washing and drying programme.

1. Load the laundry one item at a time.
2. Put the detergent and the additives in the appropriate compartment.
3. Turn the programme knob to the required programme to switch the machine on.
4. Set the available options.

To have a good drying performance **do not** exceed the maximum drying loads recommended in the user manual. **Do not** set a spin speed lower than the automatic speed of the set programme.

12.2 Washing & Timed Drying

To have a good drying the appliance does not let you set a too low spin speed for the items to be washed and dried.

1. Press the button Drying Time to set the drying time value.

After some seconds the display shows the final time value, that is the total duration of the washing and drying cycles (washing + drying + anti-crease + cooling phases).

If you set only 10 minutes of drying after washing, the appliance calculates also the duration of the anti-crease and the cooling phases.

2. Press Start/Pause button to start the programme.

The indicator comes on. The door is locked. The display shows regularly a new time value.

12.3 End of the programme

The appliance stops automatically. The acoustic signals operate (if they are active).

For more information see 'At the end of the drying programme " of the previous chapter.

1. Turn the selector dial to the position Off to switch the machine off.
2. Remove the laundry from the appliance. Make sure that the drum is empty.
3. Keep the door ajar, to prevent mildew and odours.
4. Close the water tap.

12.4 Fluff in the fabrics

During the washing and/or drying phase, some types of fabric, (sponge, sweatshirt) could release fluff.

The released fluff could stick to the fabrics during the next cycle.

This inconvenient increases with technical fabrics.

To prevent the fluff in your laundry, we recommend that you:

- To do not wash dark fabrics after you washed and dried light coloured fabrics (new sponge, sweatshirt) and the contrary.
- To dry this type of fabrics at open air when they are washed the first time.
- To clean the drain filter.
- After the drying phase, clean the empty drum, the gasket and the door with a wet cloth.

13. HINTS AND TIPS

WARNING!
Refer to Safety chapters.

13.1 The laundry load

- Divide the laundry in: white, coloured, synthetics, delicates and wool.
- Obey the washing instructions that are on the laundry care labels.
- Do not wash white and coloured items together.
- Some coloured items can discolour with the first wash. We recommend that you wash them separately for the first times.
- Button up pillowcases, close zippers, hooks and poppers. Tie up belts.
- Empty the pockets and unfold the items.
- Turn multilayered fabrics, wool and items with painted illustrations inside out.
- Remove hard stains with a special detergent.
- Wash and pre-treat heavy soil stains before putting items in drum

- Be careful with the curtains. Remove the hooks and put the curtains in a washing bag or pillowcase.
- Do not wash laundry without hems or with cuts. Use a washing bag to wash small and/or delicate items (e.g. underwired bras, belts, tights, etc.).
- A very small load can cause balance problems with the spin phase. If this occurs, adjust manually the items in the tub and start the spin phase again.

13.2 Stubborn stains

For some stains, water and detergent is not sufficient.

We recommend that you pre-treat these stains before you put the items in the appliance.

Special stain removers are available. Use the special stain remover that is applicable to the type of stain and fabric.

13.3 Detergents and additives

- Only use detergents and additives specially made for washing machines:
  - powder detergents for all types of fabric,
  - powder detergents for delicate fabrics (40 °C max) and woollens,
  - liquid detergents, preferably for low temperature wash programmes (60 °C max) for all types of fabric, or special for woollens only.
- Do not mix different types of detergents.
- To help the environment, do not use more than the correct quantity of detergent.
- Obey the instructions that you find on the on packaging of these products.
- Use the correct products for the type and colour of the fabric, the programme temperature and the level of soil.
- If your appliance does not have the detergent dispenser with the flap device, add the liquid detergents with a dosing ball (supplied by the detergent's manufacturer).

13.4 Ecological hints

- Set a programme without the prewash phase to wash laundry with normal soil.
- Always start a washing programme with the maximum load of laundry allowed.
- If necessary, use a stain remover when you set a programme with a low temperature.
- To use the correct quantity of detergent, check the water hardness of your domestic system. Refer to "Water hardness".

13.5 Water hardness

If the water hardness in your area is high or moderate, we recommend that you use a water softener for washing machines. In areas where the water hardness is soft it is not necessary to use a water softener.

To know the water hardness in your area, contact your local water authority.

Use the correct quantity of the water softener. Obey the instructions that you find on the packaging of the product.

13.6 Drying hints

Prepare the drying cycle

- Open the water tap.
- Check if the drain hose is connected properly. Refer to installation chapter for more information.
- For the maximum laundry load of the drying programmes, refer to the drying programmes table.

13.7 Items not suitable for drying

Do not set a drying programme for this laundry:

- Synthetic curtains.
- Pieces of clothing with metal inserts.
- Nylon stockings.
- Quilts.
- Bed covers.
- Duvets.
- Anoraks.
- Sleeping bags.

- Fabrics with residue of hair sprays, nail solvents or similar.
- Garments with foam-rubber or materials similar to foam-rubber.

13.8 Garment labels

When you dry the laundry, obey the indications on the labels of the manufacturers:

- = The item can be tumble dried
- = The drying cycle is at high temperature
- = The drying cycle is at reduced temperature
- = The item can not be tumble dried.

13.9 Drying cycle duration

The drying time can change depending on:
- speed of the last spin
- dryness level
- type of laundry
- weight of the load

13.10 Additional drying

If, at the end of the drying programme, the laundry is still damp, set a short drying cycle again.

WARNING!
To avoid creasing and shrinkage do not overdry the laundry.

13.11 General Tips

Refer to the «Drying programmes» table to find the **average** drying times. Experience will help you to dry the laundry better. Take note of the duration of the cycles done before.

To avoid the static charge at the end of the drying cycle:

1. Use fabric conditioner in the washing cycle.
2. Use special fabric conditioner for tumble dryers.

When the drying programme is completed remove the laundry promptly.

14. CARE AND CLEANING

WARNING!
Refer to Safety chapters.

14.1 External cleaning

Clean the appliance with soap and warm water only. Fully dry all the surfaces.

CAUTION!
Do not use alcohol, solvents or chemical products.

14.2 Descaling

If the water hardness in your area is high or moderate, we recommend that you use a water descaling product for washing machines.

Regularly examine the drum to prevent limescale and rust particles.

To remove rust particles use only special products for washing machines. Do this separately from the laundry wash.

Always obey the instructions that you find on the packaging of the product.

14.3 Maintenance wash

With the low temperature programmes it is possible that some detergent stays in the drum. Perform a maintenance wash regularly. To do this:

- Remove all laundry from the drum.
- Select the cotton programme with the highest temperature with a small quantity of detergent.

14.4 Door seal

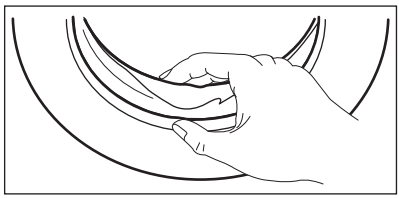

Regularly examine the seal and remove all objects from the inner part.

14.5 Cleaning the detergent dispenser

1.

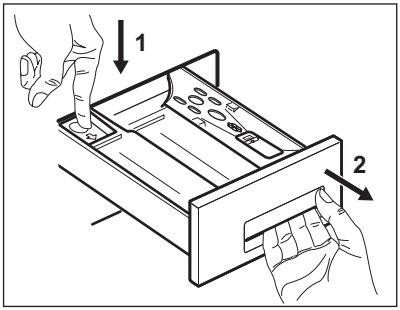

2.

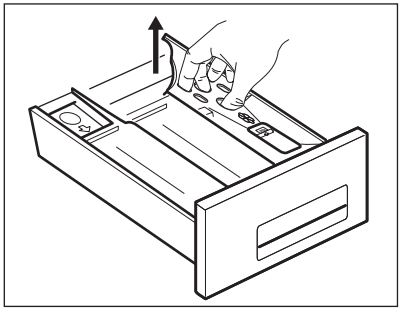

3.

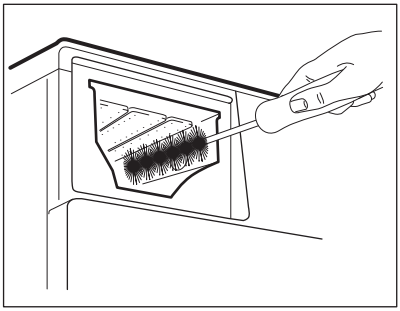

4.

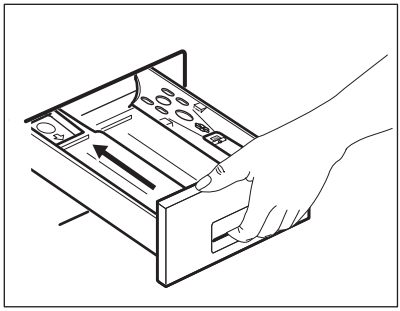

14.6 Cleaning the drain filter

The pump should be inspected regularly and particularly if:

- The appliance does not empty and/or spin.
- The appliance makes an unusual noise during draining due to objects such as safety pins, coins etc. blocking the pump.
- A problem with water draining is detected (see chapter "Troubleshooting" for more details).

WARNING!
Before unscrewing the pump cover, switch the appliance off and remove the mains plug from the socket.

To clean the drain filter:

WARNING!
When the appliance is in use and depending on the programme selected there can be hot water in the filter. Never remove the filter cover during a wash cycle, always wait until the appliance has finished the cycle, and is empty. When refitting the filter cover, ensure it is securely re-tightened so as to stop leaks and young children being able to remove it.

1. Unplug the appliance.
2. If it is necessary, wait until the water has cooled down.

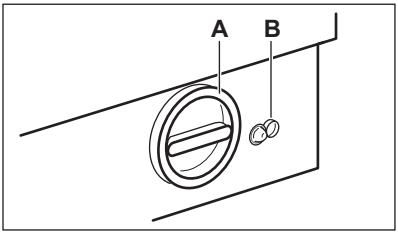

3. Place a container close to the pump to collect any spillage.
A = Cover filter.
B = Emergency emptying hose.

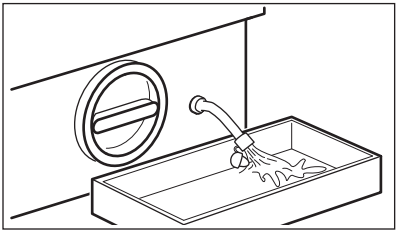

4. Release the emergency emptying hose, place it in the container and remove its cap cover.

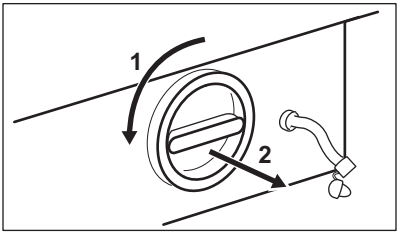

5. When no more water comes out, unscrew the filter cover by turning it anti-clockwise and remove the filter. Use pliers, if necessary. Always keep a rag nearby to dry up any water spillages when removing the cover. Clean the filter under a tap, to remove any traces of fluff.

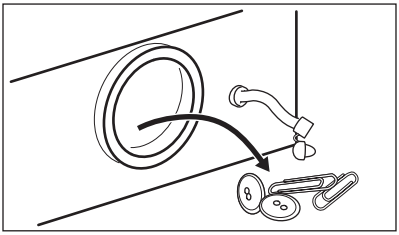

6. Remove foreign bodies and fluff from the filter seat and from the filter impeller.

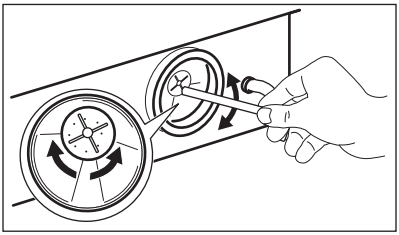

7. Check carefully whether the pump impeller rotates (it rotates jerkily). If it doesn't rotate, please contact your Service Centre.

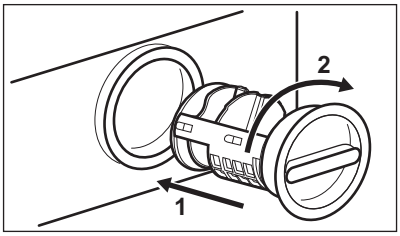

8. Put the cap back on the emergency emptying hose and place the latter back in its seat. Replace the filter into the pump by inserting it correctly into the special guides. Screw the filter cover firmly by turning it clockwise.

14.7 Cleaning the inlet hose and the valve filter

1.

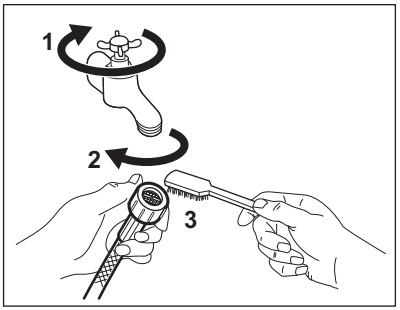

2.

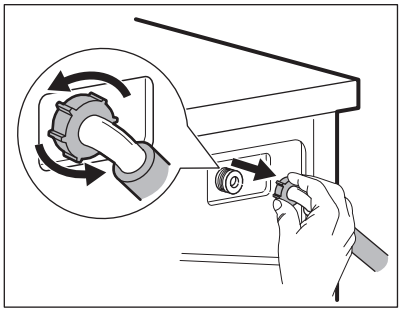

3.

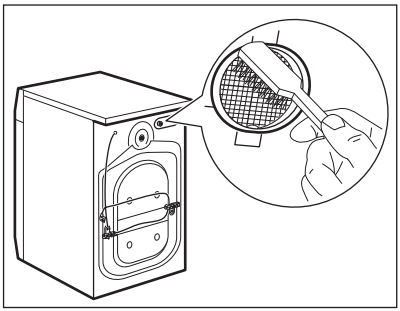

4.

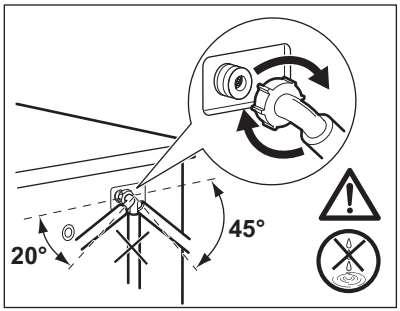

14.8 Frost precautions

If the appliance is installed in an area where the temperature can be less than 0° C, remove the remaining water from the inlet hose and the drain pump.

1. Disconnect the mains plug from the mains socket.
2. Close the water tap.
3. Place the end of the emergency emptying hose and that of the inlet hose in a bowl placed on the floor and let water flow out of the hoses.
4. Set the Drain programme and let it operate until the end of the cycle.
5. Turn the programme knob to Off to disconnect the appliance from the power supply.
6. Screw the water inlet hose back on and re-fit the emergency emptying hose after having put the cap on again.

WARNING!
Make sure that the temperature is more than 0 °C before you use the appliance again.
The manufacturer is not responsible for damages caused by low temperatures.

15. TROUBLESHOOTING

WARNING!
Refer to Safety chapters.

15.1 Introduction

The appliance does not start or it stops during operation.

First try to find a solution to the problem (refer to the table). If the problem persists, contact the Authorised Service Centre.

With some problems, the acoustic signals operate and the display shows an alarm code:

- E10 - The appliance does not fill with water properly. Start the appliance again by pressing Start/Pause button. After 10 seconds the door will be unlocked.
- E20 - The appliance does not drain the water.
- E40 - The appliance door is open or not closed correctly. Please check the door!
- EH0 - The mains supply is unstable. Wait until the mains supply is stable.
- E91 - No communication between electronic elements of the appliance. Switch off and switch on again. The programme was not finished properly or the appliance stopped too early. If the alarm code appears again, contact the Authorised Service Centre.
- EF0 - The anti-flood device is on. Disconnect the appliance and close the water tap. Contact the Authorised Service Centre.

WARNING!
Deactivate the appliance before you do the checks.

15.2 Possible failures

Problem	Possible solution
The programme does not start.	• Make sure that the mains plug is connected to the mains socket. • Make sure that the appliance door is closed. • Make sure that there is not a damaged fuse in the fuse box. • Make sure that the Start/Pause has been pressed. • If the delay start is set, cancel the setting or wait for the end of countdown. • Deactivate the Child Lock function if it is on (if available).

Problem	Possible solution
The appliance does not fill with water properly.	• Make sure that the water tap is open. • Make sure that the pressure of the water supply is not too low. For this information, contact your local water authority. • Make sure that the water tap is not clogged. • Make sure that the filter of the inlet hose and the filter of the valve are not clogged. Refer to “Care and cleaning”. • Make sure that the inlet hose has no kinks or bends. • Make sure that the connection of the water inlet hose is correct.
The appliance does not drain the water.	• Make sure that the sink spigot is not clogged. • Make sure that the drain hose has no kinks or bends. • Make sure that the drain filter is not clogged. Clean the filter, if necessary. Refer to 'Care and cleaning'. • Make sure that the drain hose is in the correct position. The hose may be too low. • Set the drain programme if you set a programme without drain phase. • Set the drain programme if you set an option which ends with water in the tub.
The spin phase does not operate or the washing cycle lasts longer than usually.	• Set the spin programme. • Adjust manually the items in the tub and start the spin phase again. This problem may be caused by balance problems.
There is water on the floor.	• Make sure that the couplings of the water hoses are tight and there is not water leakages. • Make sure that the drain hose have no damages. • Make sure you use the correct detergent and the correct quantity of it. • Make sure you have replaced the emergency emptying cap into the filter • Make sure you have properly screwed the filter in after cleaning.
You cannot open the appliance door.	• Make sure that the washing programme is finished. • Set the drain or the spin programme if there is water in the drum.
The appliance makes an unusual noise.	• Make sure the levelling of the appliance is correct. Refer to 'Installation'. • Make sure that the packaging and/or the transit bolts are removed. Refer to 'Installation'. • Add more laundry in the drum. The load may be too small.

Problem	Possible solution
The washing results are not satisfactory.	• Increase the detergent quantity or use a different detergent. • Use special products to remove the stubborn stains before you wash the laundry. • Make sure that you set the correct temperature. • Decrease the laundry load.
You cannot set an option.	• Make sure that you press only the wanted button(s).
The machine does not dry or does not dry properly:	• Make sure that you have set a suitable drying programme for your laundry. • Make sure that you set the correct the drying time or dryness degree. • Make sure that the water tap is not turned on. • the drain filter is not clogged. • Make sure you have not overloaded the appliance.
The laundry is full of different coloured fluff:	The fabrics washed in the previous cycle released fluff of a different colour. • Clean the clothes with a fluff remover • The drying phase helps to eliminate some fluff. In case of an excessive amount of fluff in the drum, refer to section «FLUFF IN THE FABRICS». • Thoroughly clean the empty drum, the gasket and the door with a wet rag. • Perform a rinse cycle. • Put a wool or piled fabric rag inside the drum. • Perform a drying cycle of 10 minutes. • Remove the old wool cloth. Now you can wash other garments.

After the check, activate the appliance. The programme continues from the point of interruption.

If the problem occurs again, contact the Authorised Service Centre.

If the display shows other alarm codes. Deactivate and activate the appliance. If the problem continues, contact the Service.

16. INSTALLATION

16.1 Unpacking

WARNING!
Remove all the packaging and the transit bolts before installing the appliance.

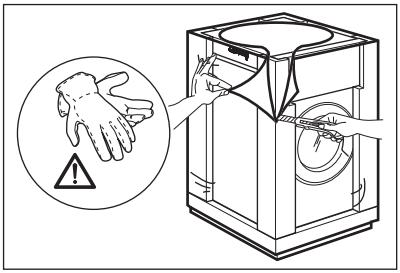

Use the gloves. Remove the external film. If necessary, use a cutter.

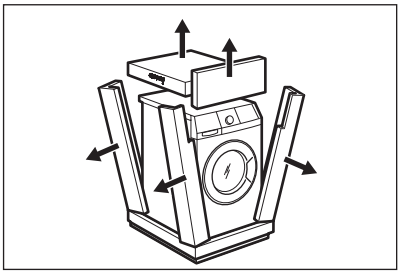

Remove the cardboard top. Remove the polystyrene packaging materials.

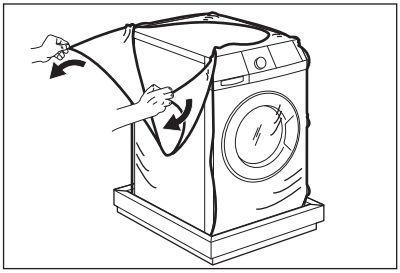

Remove the internal film.

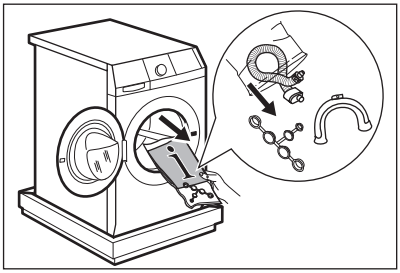

Open the door. Remove the polystyrene piece from the door seal and all the items from the drum.

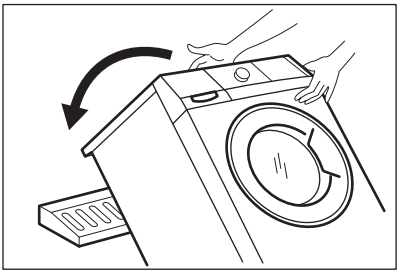

Put one of the polystyrene packaging elements on the floor behind the appliance. Carefully put down the appliance with the rear side on it. Make sure not to damage the hoses.

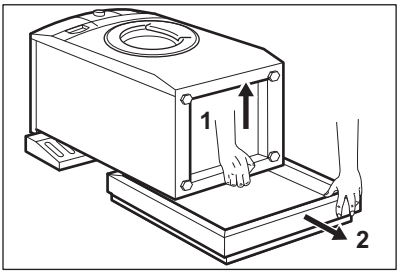

Remove the polystyrene protection from the bottom. Pull up the appliance in vertical position.

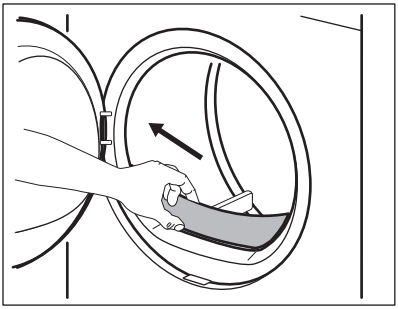

Remove the polystyrene block fitted on the door seal (if present). Pull out all items from the drum.

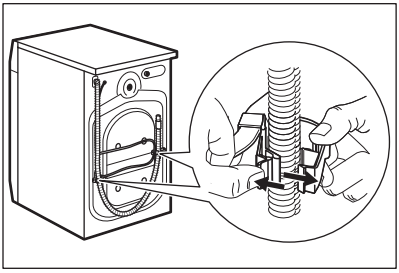

Remove the power supply cable and the drain hose from the hose holders.

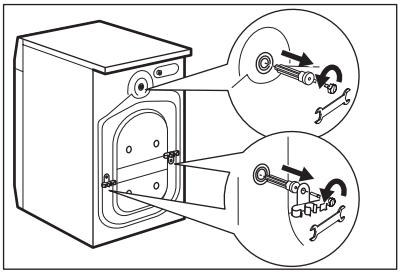

Remove the three bolts. Use the key supplied with the appliance. Pull out the plastic spacers.

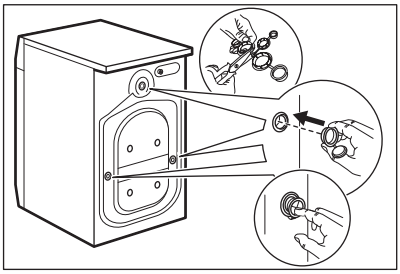

Put the plastic caps in the holes. You can find these caps in the user manual bag.

We recommend that you keep the packaging and the transit bolts for any movements of the appliance.

16.2 Positioning and levelling

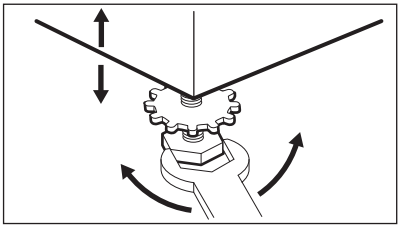

- Install the appliance on a flat hard floor.
- Make sure that air circulation around the appliance is not impeded by carpets, rugs etc.
- Level the appliance by raising or lowering the feet.

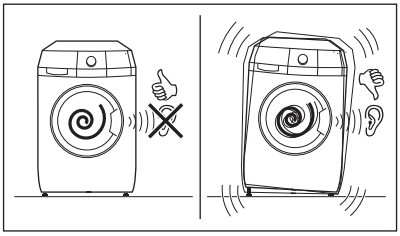

- The feet may be tight to adjust as they incorporate a self locking nut, but the appliance MUST be level and stable. If necessary, check the setting with a spirit level. Any necessary adjustment can be made with a spanner. Accurate levelling prevents vibration, noise and displacement of the appliance during operation.

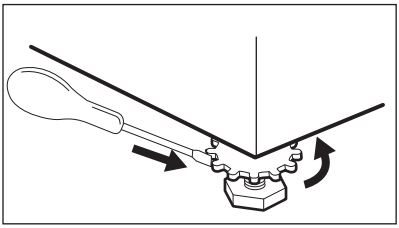

- After having levelled the appliance, tighten the lock nuts.

WARNING!
Never place cardboard, wood or similar materials under the appliance to compensate for any unevenness in the floor.

16.3 The inlet hose

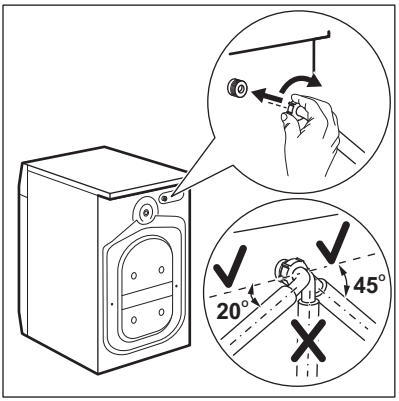

- Connect the hose to the back appliance. Turn the inlet hose only left or right.
- Loose the ring nut to set it in the correct position.

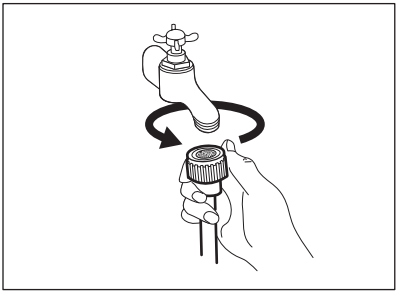

- Connect the water inlet hose to the cold water tap with 3/4" thread.

CAUTION!
Make sure that there are no leaks from the couplings.

Do not use an extension hose if the inlet hose is too short. Contact the service centre for the replacement of the inlet hose.

Water drainage

There are different procedures to connect the drain hose:

With the plastic hose guide.

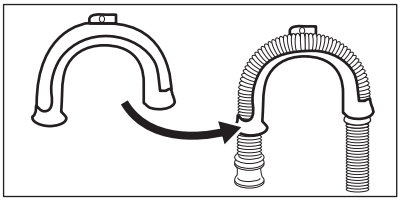

- Make a U shape with the drain hose.

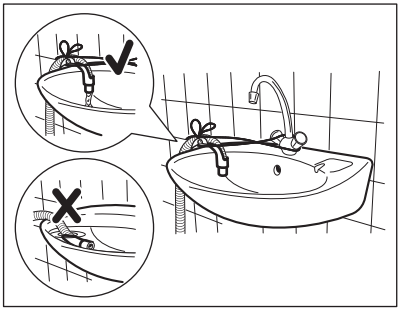

On the edge of a sink

- Make sure that the plastic guide cannot move when the appliance drains. Attach the guide to the water tap or the wall.

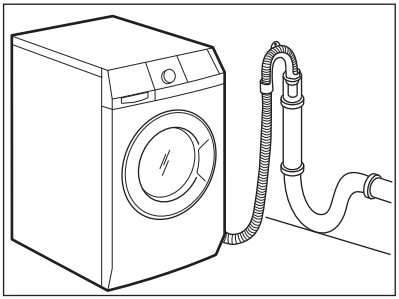

To a stand pipe with vent-hole

- Directly into a drain pipe at a height of not less than 60 cm (23.6”) and not more than 100 cm (39.3”). Refer to the illustration.
- The end of the drain hose must always be ventilated , i.e. the inner diameter of the drain pipe (min. 38 mm - min. 1.5”) must be larger than the external diameter of the drain hose.

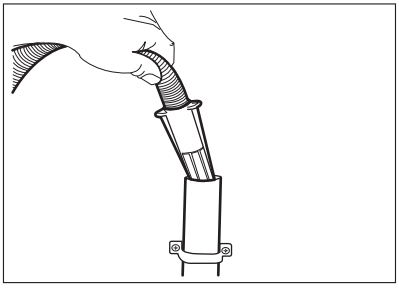

Drain hose end

- If the end of the drain hose looks like this (see the picture), you can push it directly into the stand pipe.

Without the plastic hose guide.

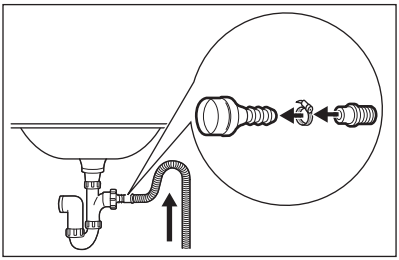

To a sink spigot

- Refer to the illustration. Put the drain hose in the spigot and tighten it with a clip.
- Make sure that the drain hose makes a loop to prevent particles going into the appliance from the sink.

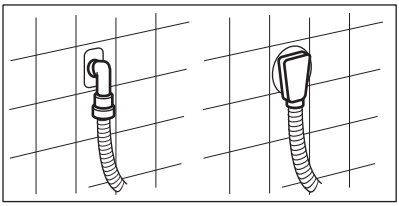

To a wall-pipe

- Directly to a built-in drain pipe in the room wall and tighten it with a clip.

You can extend the drain hose to maximum 400 cm. Contact the service centre for the other drain hose and the extension.

16.4 Building in

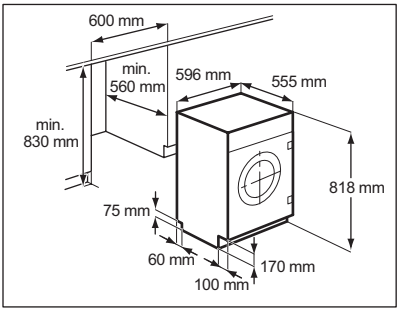

This appliance has been designed to be built into the kitchen furniture. The recess should have the dimensions shown in this picture.

Installing anti-tilting device

If the height of the counter is 820 mm or lower, you **cannot** install the anti-tilting device.

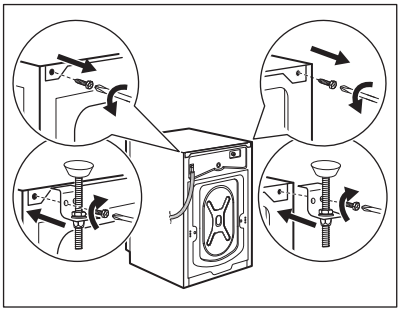

Remove the screws of the top cover on the rear of the appliance and install the anti-tilting device as shown in the drawing.

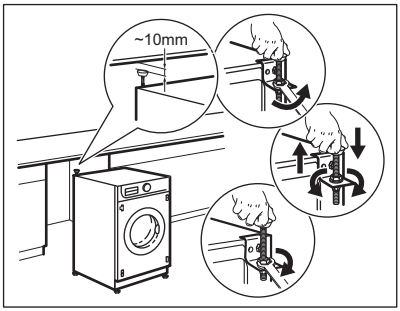

Adjust the anti-tilting device so that the distance from the counter is 10mm. Loosen the nut counterclockwise with a 3mm wrench. Adjust the height and turn the nut clockwise to fix it.

16.5 Preparation and assembly of the door

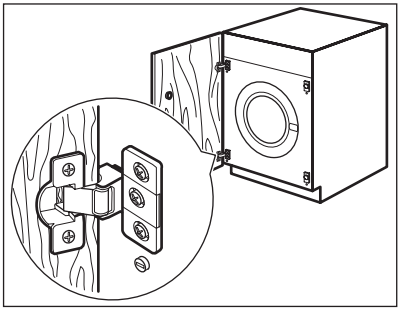

The appliance is originally pre set for the assembly of a door opening from right to left.

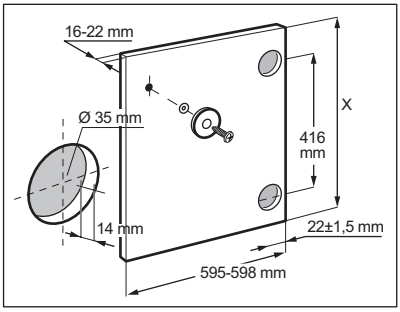

Door

The dimensions of the door should be:

- width 595 - 598 mm
- thickness 16-22 mm
- the height X depends on the height of the adjacent furniture's base.

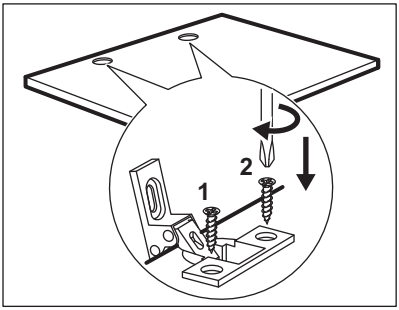

Hinges

To mount the hinges it is necessary to drill two holes (dia. 35 mm, depth12.5-14 mm depending on the depth of door furniture) on the inner side of the door.
The distance between the hole fixing centres must be 416 mm. The distance from upper edge of the door to the centre of the hole depends on the adjacent furniture's dimensions.
The hinges will be fixed to the door by means of screws for wood **1** and **2** supplied with the appliance.

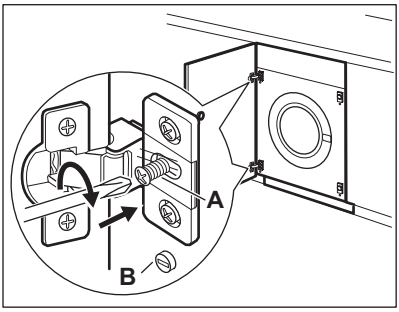

Mounting the door

WARNING!
Do not remove the screw **B**.

Fix the hinges to the appliance by means of the M5x15 screws.
The hinges can be adjusted to compensate for possible uneven thickness of the door.
To align the door perfectly it is necessary to loosen the screw, adjust the door and tighten the screw **A** again.

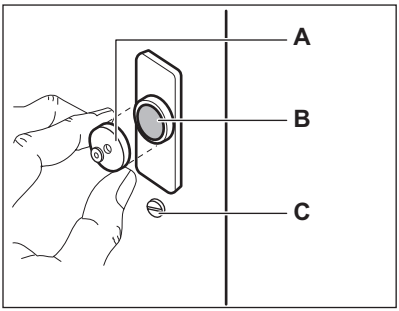

Counter-magnet

WARNING!
Do not remove the screw **B**.

The appliance is pre set for a magnetic door closure. To position the closure correctly, it is necessary to screw the counter-magnet **A** (steel disk + rubber ring) into the inner side of the door.
Its position must correspond to the magnet **B** on the appliance.

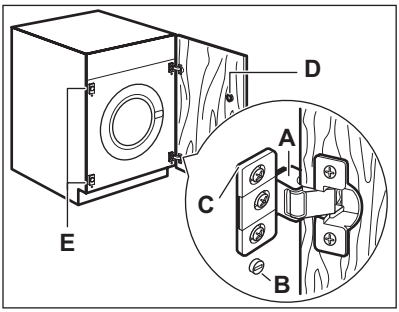

WARNING!
Do not remove the screw **B**.

If the door has to be opened from left to right, invert the position of the plates **E**, the magnet **D** and the plate **C**. Mount the counter-magnet **D** and the hinges **A** as previously described.

17. TECHNICAL DATA

Dimension	Width/ Height/ Depth/ Total depth	596 mm/ 818 mm/ 544 mm/ 560 mm
Electrical connection	Voltage Overall power Fuse Frequency	230-240 V 2050 W 13 A 50 Hz
Level of protection against ingress of solid particles and moisture ensured by the protective cover, except where the low voltage equipment has no protection against moisture		IPX4
Water supply 1)		Cold water
Water supply pressure 2)	Minimum Maximum	0,5 bar (0,05 MPa) 8 bar (0,8 MPa)
Maximum wash load	Cotton	7 kg
Maximum dry load	Cotton Synthetics	4 kg 2 kg
Spin Speed	Maximum	1400 rpm

1) Connect the water inlet hose to a water tap with a 3/4'' thread.

2) The appliance works correctly if the water pressure is not lower than 0.05 MPa (0.5 bar). If you cannot connect the water inlet hose to the cold water tap of the primary hydraulic system, connect it to your domestic cold water storage system. Make sure not to exceed a distance of 5.02 m (16.5 ft) between the appliance inlet hose and the bottom of the water storage tank.

18. ENVIRONMENTAL CONCERNS

Recycle materials with the symbol ♺. Put the packaging in relevant containers to recycle it. Help protect the environment and human health by recycling waste of electrical and electronic appliances. Do not dispose of appliances marked with the symbol with the household waste. Return the product to your local recycling facility or contact your municipal office.

www.aeg.com/shop



157017470-A-512017

CE

AEG