terra



LCD/LED 2462W
USER MANUAL

+ GERMAN
+ ENGLISH
+ FRENCH
+ SPANISH
+ ITALIAN
+ RUSSIAN

WORTMANN AG

English

Safety Precautions and Maintenance 1

Basic setup 2

Screen image setups 2

Functions 3

- BRIGHTNESS 3
- IMAGE 3
- COLOR TEMP. 4
- OSD SETTING 5
- RESET 6
- MISC 7

Installing the LED Monitor 8

Supporting Timing Modes 9

Troubleshooting 10

SPECIFICATIONS: 11

Safety Precautions and Maintenance

Read this manual carefully and retain for future reference

1. Unplug the monitor before cleaning it with a slightly damp cloth.
2. Wiping the screen with a dry cloth is recommendable, and only during the power has been switched off.
3. Do not use alcohol or ammonia-based liquids.
4. This monitor is designed with ventilation holes on the cabinet back, please do not cover them or block it.
5. Also avoid placing the monitor near the electric heater or heater, including in an enclosed room with no ventilations.
6. Please do not insert any matter or spray any liquid on it.
7. Please do not position the monitor on unsafe space, if it falls, it may be damaged and may hurt the user.
8. Unplug the monitor if it is not going to be in use for an extended period of time.
9. Please do not put heavy items on the monitor, or electric cord.
10. Please do not open the monitor back panel because the monitor contained high voltage current.

Contents

* Monitor
* DVI cable
* Power cord
* Adapter
* Warranty card
* User manual
* Audio cable

Features：

* 16.7M high quality image colors
* Smart image screen setting-OSD with simple layout and easy selection
* Smart control interfaces for easy settings

Basic setup

a) Insert the DVI cable, HDMI cable or DisplayPort cable to the PC (signal output).

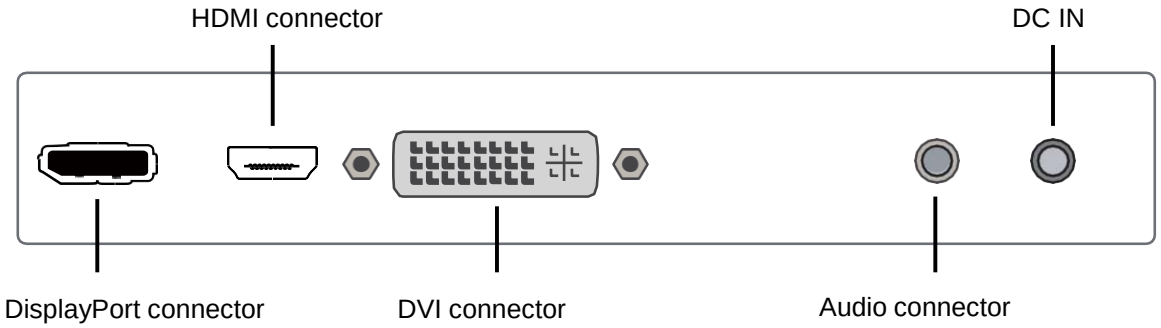

b) The monitor has a wide power voltage range; it can be used on AC100-240V~ 50/60Hz power supply.

c) Connect the power cable to the Monitor power socket and to the power source in the room.

d) Turn on the power source supply.

e) To switch on the monitor, press the power control key.

Screen image setups

The right side of the monitor has five keys to adjust the monitor settings with aid of the OnScreen Display.



2	Confirm selection OSD / When not in OSD-Menu: source selection
△	Adjust the options-move up / When not in OSD-Menu: call the volume menu
▽	Adjust the options-move down or lower / When not in OSD-Menu: call the brightness menu
	Shows main menu/ Exit from menu
	Press【】key long-term: OSD LOCKED
	Then press【】key long-term: OSD UNLOCKED
	Power ON/OFF
	Press【】key long-term: POWER LOCKED
	Then press【】key long-term: POWER UNLOCKED

Functions:

BRIGHTNESS

Press [1] button the main menu will appear as follows:

Press △ / ▽ button to select **BRIGHTNESS** in the main menu, then press [2] button to enter.

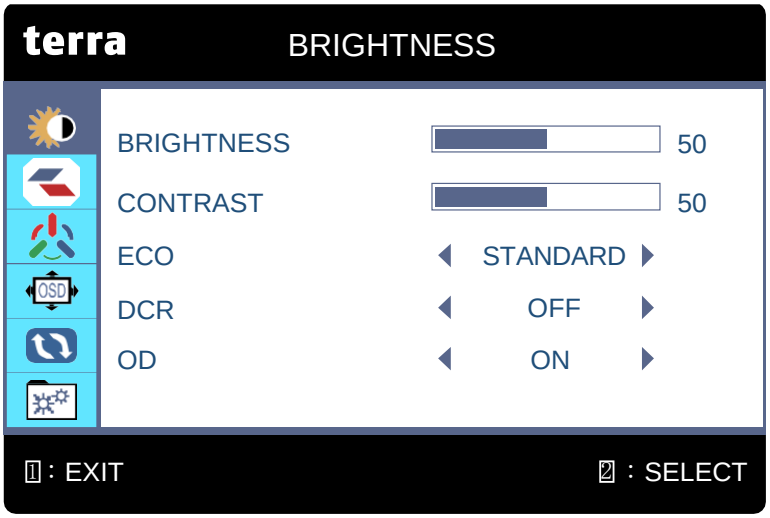

BRIGHTNESS

Press △ / ▽ button to select **BRIGHTNESS**, then press [2] button confirmation choice and press △ / ▽ button to adjust.

CONTRAST

Press △ / ▽ button to select **CONTRAST**, then press [2] button confirmation choice and press △ / ▽ button to adjust.

ECO

Press △ / ▽ button to select **ECO**, then press [2] button confirmation choice and press △ / ▽ button to select (STANDARD, TEXT, MOVIE, GAME).

DCR (Dynamic Contrast Ratio)

Press △ / ▽ button to select **DCR**, then press [2] button confirmation choice and press △ / ▽ button to choose ON or OFF.

OD

Press△ / ▽ button to select **OD**, then press [2] button confirmation choice and press △ / ▽ button to choose ON or OFF.

IMAGE

Press [1] button to select **IMAGE** in the main menu, then press [2] button to enter.

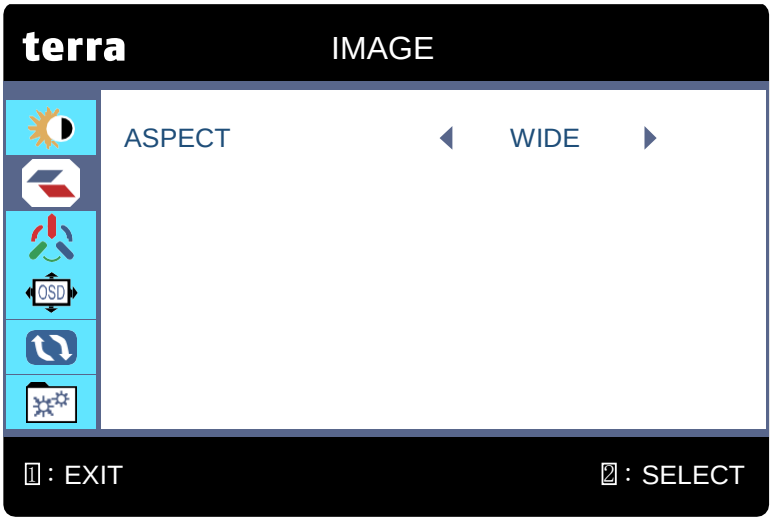

ASPECT

Press △ / ▽ button to select **ASPECT**, then press 2 button confirmation choice and press △ / ▽ button to select WIDE or 4:3.

COLOR TEMP.

Press △ / ▽ button to select **COLOR TEMP.** in the main menu, then press 2 button to enter.

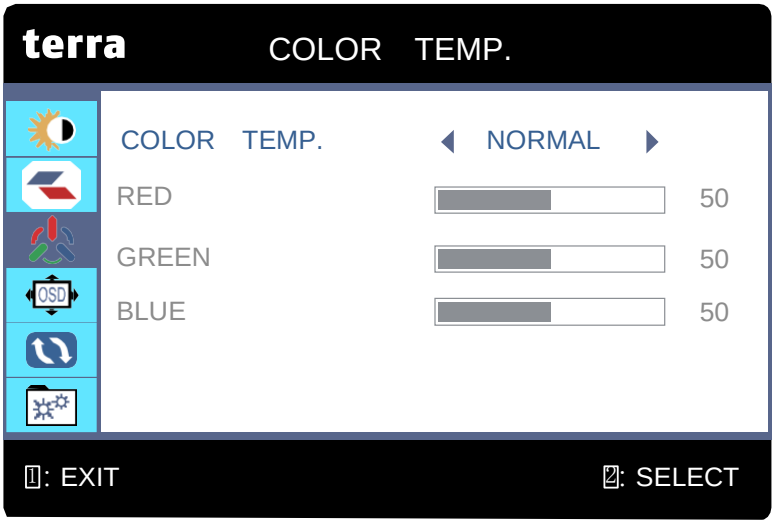

COLOR TEMP.

Press △ / ▽ button to select **COLOR TEMP.**, then press 2 button confirmation choice and Press △ / ▽ button to choose the color temperature (NORMAL, WARM, COOL, USER).

RED

When you choose the **User** Press △ / ▽ button to select **RED**, then press 2 button to adjust the value of the three primary colors of red.

GREEN

When you choose the **User** Press △ / ▽ button to select **GREEN**, then press 2 button to adjust the value of the three primary colors of green.

BLUE

When you choose the **User** Press △ / ▽ button to select **BLUE**, then press 2 button to adjust the value of the three primary colors of blue.

OSD SETTING

Press △ / ▽ button to select **OSD SETTING** in the main menu, then press 2 button to enter.

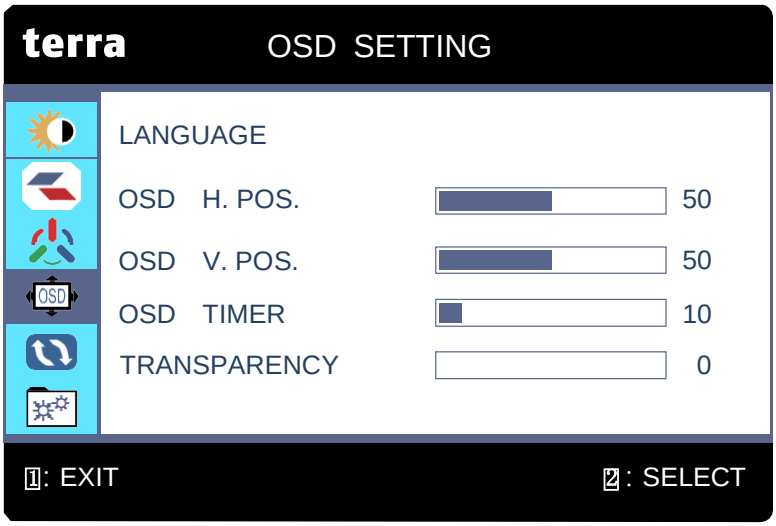

LANGUAGE

Press △ / ▽ button to select **LANGUAGE**, then press 2 button confirmation choice and press △ / ▽ button to select, then press 2 button confirmation choice. (ENGLISH, FRANÇAIS, DEUTSCH, ITALIANO, ESPAÑOL, РУССКИЙ)

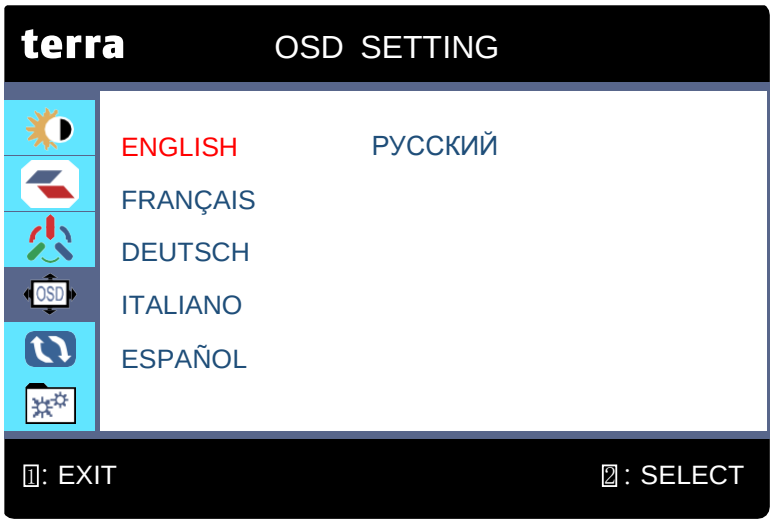

OSD H.POS.

Press △ / ▽ button to select **OSD H.POS.** then press 2 button confirmation choice and Press △ button OSD toward the right direction. Press ▽ button OSD toward the left direction.

OSD V.POS.

Press △ / ▽ button to select **OSD V.POS.** then press 2 button confirmation choice and Press △ button OSD toward the up direction. Press ▽ button OSD toward the down direction.

OSD TIMER

Press △ / ▽ button to select **OSD TIMER**, then press 2 button confirmation choice and Press △ / ▽ button to adjust.

TRANSPARENCY

Press △ / ▽ button to select **TRANSPARENCY**, then press 2 button confirmation choice and Press △ / ▽ button to adjust.

RESET

Press △ / ▽ button to select **RESET** in the main menu, then press 2 button to enter.

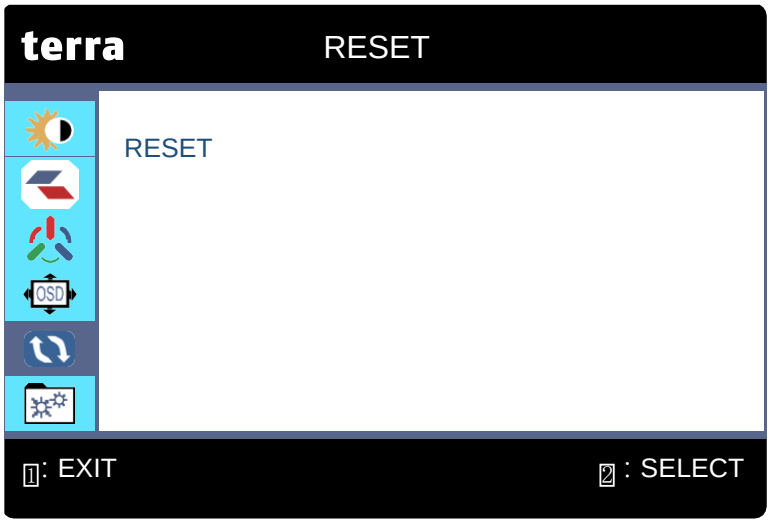

RESET

To recall factory settings for Video & Audio controls.

MISC

Press △ / ▽ button to select **MISC** in the main menu, press [2] button to enter.



SIGNAL SOURCE

Press △ / ▽ button to select **SIGNAL SOURCE**, then press [2] button confirmation choice and press △ / ▽ button to select DVI, HDMI or DisplayPort then press [2] button confirmation choice.

VOLUME

Press △ / ▽ button to select **VOLUME**, then press [2] button confirmation choice and press △ / ▽ button to adjust.

AUDIO INPUT (only available in HDMI and DisplayPort mode)

Press △ / ▽ button to select **AUDIO INPUT** in the main menu then press [2] button confirmation choice and press △ / ▽ button to select (DIGITAL or ANALOG).

OSD LOCKED

Press【⏻】key long-term to lock the OSD

OSD UNLOCKED

Then press【⏻】key long-term to unlock the OSD

POWER LOCKED

Press 【 ⏻ 】key long-term to lock the power button

POWER UNLOCKED

Then press【 ⏻ 】key long-term to unlock the power button

Installing the LED Monitor

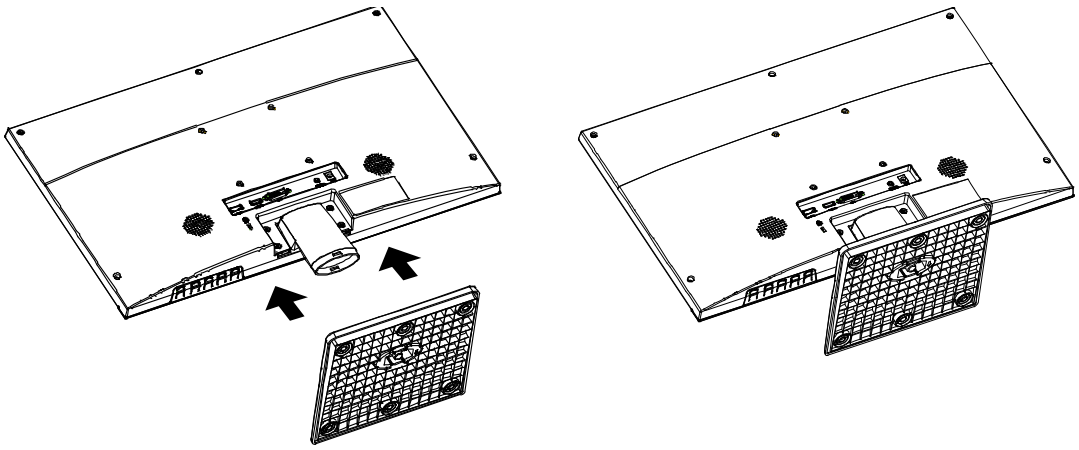

1. Place the monitor face down on a soft cloth or cushion on a table.
2. Install the stand base to the monitor.

Supporting Timing Modes

Standard	Resolutions	DVI-D	HDMI	DisplayPort
MAC	640x480@67Hz	√	√	√
VESA	640x480@72Hz	√	√	√
VESA	640x480@75Hz	√	√	√
VESA	800x600@56Hz	√	√	√
VESA	800x600@60Hz	√	√	√
VESA	800x600@72Hz	√	√	√
VESA	800x600@75Hz	√	√	√
VESA	1024x768@60Hz	√	√	√
VESA	1024x768@70Hz	√	√	√
VESA	1024x768@75Hz	√	√	√
VESA	1280x800@60Hz	√	√	√
VESA	1152x864@60Hz	√	√	√
VESA	1280x1024@60Hz	√	√	√
VESA	1280x1024@75Hz	√	√	√
VESA	1440x900@60Hz	√	√	√
VESA	1600x1200@60Hz	√	√	√
VESA	1680x1050@60Hz	√	√	√
VESA	1920x1080@60Hz	√	√	√

Warning: Do not set the graphic card in your computer to exceed these maximum refresh rates. Doing so may result in permanent damage to your monitor.

Troubleshooting

1. NO Image on Screen

a) Check if the power button has been switched on.

b) Verify the brightness and contrast of the monitor is within the normal setting.

c) Check the power indicator is orange. If so this indicates that the monitor is not receiving the input signal.

d) If the signal source is notebook or laptop, make sure that the signal has been switched to screen mode.

2. Non-focus Image

a) Check if the image signal cable is inserted properly (upright position).

3. Flash Screen

a) The power is insufficient to connect the monitor or too weak.

b) To avoid magnetic field around the monitor, do not place these devices close to it. Such as speakers, fluorescence lightings, AC transformer, table fan, and etc.

c) By pressing the AUTO key, the Auto Adjust Image function will automatically apply optimizes settings to the display.

4. Wrong or Unusual Colour

a) if red, green, blue or any of the colour disappears, check to see if the signal cord is connected properly. If the plug is loosely connected it might cause bad connection.

b) Try connecting to another PC for comparison.

5. How to Clean the Monitor

a) Make sure that the monitor power has been switched off.

b) Do not spray any liquid on the screen or the plastic panel directly.

6. When Cleaning the Screen

a) Use clean, soft no fur materials to clean the screen.

b) If it is still dirty, do add a little of non-ammonia liquid and non-alcohol glass cleanser to clean the screen.

7. When Cleaning the Plastic Panel

a) Use soft dry cloth.

b) To add a little of non-ammonia liquid and non-alcohol of non-abrasion cleanser to clean surface if it is still unclean.

SPECIFICATIONS:

Dimension		23.8”
Monitor type		LED
Brightness		250 cd/m²
Color		16.7M
Resolutions		1920X1080@60Hz
Power requirement		100-240V ~ 50/60Hz
Power Mains adapter		FSP-030-RHAN2 DC12V ⎓ 2.5A
Power consumption		<30W
Input connector	DVI-D	DVI Digital
	HDMI	HDMI Ver1.3 Connector
	DisplayPort	DisplayPort Ver1.2 Connector
	Audio Input	3.5mm stereo Jack
Environment		Operation Temp:0°C ~ 40°C Humidity: Less than 80% Storage Temp:-20°C ~ 60°C

WEEE Statement



Wichtige Recyclinginformation

Das Gerät darf nach dem Ende der Nutzungszeit nicht mit dem Restmüll entsorgt werden. Bitte führen Sie es zur umweltgerechten Entsorgung den kommunalen Altgeräte-Sammelstellen zu.

Für weitere Informationen wenden Sie sich bitte an die unten stehende Adresse.

Important Information for Recycling

This warning sign of trash bin indicates that the objects are not allowed to be disposed as general refuse. Please follow the local act and carry out further disposal with refuse recycling and collecting system in your Country or District.

Please contact the address below for more information on recycling.

Informations importantes relatives au recyclage

En fin de vie, cet appareil ne dois pas étre jeté aux ordures ménagères.

Veuillez respecter les réglementations locales et rester en conformité avec le système de collecte et de recyclage des ordures en vigueur dans votre région.

Pour plus d'information sur le recyclage, veuillez contacter votre centre de recyclage agréé.

Votre attitude quand au recyclage améliorera l'avenir de la planète et créera un environnement de vie de qualité pour les générations futures.

Wortmann AG
Bredenhop 20
D-32609 Hüllhorst

Tel. +49 (0) 5744 /944-0
Fax +49 (0) 5744 / 944-444

www.wortmann.de
info@wortmann.de

GENERAL PUBLIC LICENSE (GPL) - VER.2

Lizenzinformation Open Source Software/GPL Sourcecode

Dieses Produkt enthält Software, die von Dritten stammt, darunter auch Software, die unter der GNU General Public License Version 2 ("GPLv2") und der GNU Lesser Genberal Public License, Version 1.2 (LGPLv2.1) lizenziert ist. Solche Programmbestandteile werden nachfolgend als „Programm" oder „Program" bezeichnet.

Schriftliches Angebot des GPL/LGPL Sourcecodes

Wir werden gegen Erstattung der Kosten für den Datenträger und den Versand des Datenträgers auf Nachfrage jedermann den Sourcecode der GPL- und LGPL-Bestandteile der Software auf einer CD-ROM oder einem ähnlichen Datenträger übersenden. Dieses Angebot ist gültig für einen Zeitraum von drei Jahren ab Erwerb des Produktes.
Bei Nachfragen im Zusammenhang mit GPLv2 und LGPLv2.1: Bitte richten Sie alle GPL/LGPL-Nachfragen an die nachfolgend angegebene Adresse. Wir weisen darauf hin, dass unter der angegebenen Adresse kein technischer Support geleistet wird.

LICENSE STATEMENT / GPL CODE STATEMENT

This product includes software code developed by third parties, including software code subject to the GNU General Public License Version 2 ("GPLv2") and the GNU Lesser Genberal Public License, Version 1.2 (LGPLv2.1). These parts of the software are hereinafter referred to as „the or this Program "

WRITTEN OFFER FOR GPL/LGPL SOURCE CODE

We will provide everyone upon request the applicable GPL and LGPL source code files via CD-ROM or similar storage medium for a nominal cost to cover shipping and media charges as allowed under the GPL/LGPL. This offer is valid for 3 years.
GPLv2 and LGPLv2.1 inquiries: Please direct all GPL/LGPL inquiries to the following address. Note that technical support inquiries will not be supported at the below address.

WORTMANN AG
- GPL ANFRAGE -
Bredenhop 20
32609 Hüllhorst
Deutschland

NO WARRANTY

This program is distributed in the hope that it will be useful, but WITHOUT ANY WARRANTY; without even the implied warranty of MERCHANTABILITY or FITNESS FOR A PARTICULAR PURPOSE. See the GNU General Public License for more details.

IN NO EVENT UNLESS REQUIRED BY APPLICABLE LAW OR AGREED TO IN WRITING WILL ANY COPYRIGHT HOLDER, OR ANY OTHER PARTY WHO MAY MODIFY AND/OR REDISTRIBUTE THE PROGRAM AS PERMITTED ABOVE, BE LIABLE TO YOU FOR DAMAGES, INCLUDING ANY GENERAL, SPECIAL, INCIDENTAL OR CONSEQUENTIAL DAMAGES ARISING OUT OF THE USE OR INABILITY TO USE THE PROGRAM (INCLUDING BUT NOT LIMITED TO LOSS OF DATA OR DATA BEING RENDERED INACCURATE OR LOSSES SUSTAINED BY YOU OR THIRD PARTIES OR A FAILURE OF THE PROGRAM TO OPERATE WITH ANY OTHER PROGRAMS), EVEN IF SUCH HOLDER OR OTHER PARTY HAS BEEN ADVISED OF THE POSSIBILITY OF SUCH DAMAGES.

GNU GENERAL PUBLIC LICENSE

Version 2, June 1991
Copyright (C) 1989, 1991 Free Software Foundation, Inc. 51 Franklin Street, Fifth Floor, Boston, MA 02110-1301, USA

Everyone is permitted to copy and distribute verbatim copies of this license document, but changing it is not allowed.

Preamble

The licenses for most software are designed to take away your freedom to share and change it. By contrast, the GNU General Public License is intended to guarantee your freedom to share and change free software--to make sure the software is free for all its users. This General Public License applies to most of the Free Software Foundation's software and to any other program whose authors commit to using it. (Some other Free Software Foundation software is covered by the GNU Lesser General Public License instead.) You can apply it to your programs, too. When we speak of free software, we are referring to freedom, not price. Our General Public Licenses are designed to make sure that you have the freedom to distribute copies of free software (and charge for this service if you wish), that you receive source code or can get it if you want it, that you can change the software or use pieces of it in new free programs; and that you know you can do these things. To protect your rights, we need to make restrictions that forbid anyone to deny you these rights or to ask you to surrender the rights. These restrictions translate to certain responsibilities for you if you distribute copies of the software, or if you modify it. For example, if you distribute copies of such a program, whether gratis or for a fee, you must give the recipients all the rights that you have. You must make sure that they, too, receive or can get the source code. And you must show them these terms so they know their rights.
We protect your rights with two steps: (1) copyright the software, and (2) offer you this license which gives you legal permission to copy, distribute and/or modify the software. Also, for each author's protection and ours, we want to make certain that everyone understands that there is no warranty for this free software. If the software is modified by someone else and passed on, we want its recipients to know that what they have is not the original, so that any problems introduced by others will not reflect on the original authors' reputations. Finally, any free program is threatened constantly by software patents. We wish to avoid the danger that redistributors of a free program will individually obtain patent licenses, in effect making the program proprietary. To prevent this, we have made it clear that any patent must be licensed for everyone's free use or not licensed at all.
The precise terms and conditions for copying, distribution and modification follow.

TERMS AND CONDITIONS FOR COPYING, DISTRIBUTION AND MODIFICATION

0. This License applies to any program or other work which contains a notice placed by the copyright holder saying it may be distributed under the terms of this General Public License. The „Program ", below, refers to any such program or work, and a „work based on the Program "means either the Program or any derivative work under copyright law: that is to say, a work containing the Program or a portion of it, either verbatim or with modifications and/or translated into another language.
(Hereinafter, translation is included without limitation in the term „modification ".) Each licensee is addressed as „you ". Activities other than copying, distribution and modification are not covered by this License; they are outside its scope. The act of running the Program is not restricted, and the output from the Program is covered only if its contents constitute a work based on the Program (independent of having been made by running the Program). Whether that is true depends on what the Program does.

1. You may copy and distribute verbatim copies of the Program's source code as you receive it, in any medium, provided that you conspicuously and appropriately publish on each copy an appropriate copyright notice and disclaimer of warranty; keep intact all the notices that refer to this License and to the absence of any warranty; and give any other recipients of the Program a copy of this License along with the Program.
You may charge a fee for the physical act of transferring a copy, and you may at your option offer warranty protection in exchange for a fee.

2. You may modify your copy or copies of the Program or any portion of it, thus forming a work based on the Program, and copy and distribute such modifications or work under the terms of Section 1 above, provided that you also meet all of these conditions:

a) You must cause the modified files to carry prominent notices stating that you changed the files and the date of any change.

b) You must cause any work that you distribute or publish, that in whole or in part contains or is derived from the Program or any part thereof, to be licensed as a whole at no charge to all third parties under the terms of this License.

c) If the modified program normally reads commands interactively when run, you must cause it, when started running for such interactive use in the most ordinary way, to print or display an announcement including an appropriate copyright notice and a notice that there is no warranty (or else, saying that you provide a warranty) and that users may redistribute the program under these conditions, and telling the user how to view a copy of this License. (Exception: if the Program itself is interactive but does not normally print such an announcement, your work based on the Program is not required to print an announcement.)
These requirements apply to the modified work as a whole. If identifiable sections of that work are not derived from the Program, and can be reasonably considered independent and separate works in themselves, then this License, and its terms, do not apply to those sections when you distribute them as separate works. But when you distribute the same sections as part of a whole which is a work based on the Program, the distribution of the whole must be on the terms of this License, whose permissions for other licensees extend to the entire whole, and thus to each and every part regardless of who wrote it.
Thus, it is not the intent of this section to claim rights or contest your rights to work written entirely by you; rather, the intent is to exercise the right to control the distribution of derivative or collective works based on the Program.
In addition, mere aggregation of another work not based on the Program with the Program (or

terra

with a work based on the Program) on a volume of a storage or distribution medium does not bring the other work under the scope of this License.

3. You may copy and distribute the Program (or a work based on it, under Section 2) in object code or executable form under the terms of Sections 1 and 2 above provided that you also do one of the following:
we use this doubled UL to get the sub-sections indented, while making the bullets as unobvious as possible.

a) Accompany it with the complete corresponding machinereadable source code, which must be distributed under the terms of Sections 1 and 2 above on a medium customarily used for software interchange; or,

b) Accompany it with a written offer, valid for at least three years, to give any third party, for a charge no more than your cost of physically performing source distribution, a complete machine-readable copy of the corresponding source code, to be distributed under the terms of Sections 1 and 2 above on a medium customarily used for software interchange; or,

c) Accompany it with the information you received as to the offer to distribute corresponding source code. (This alternative is allowed only for noncommercial distribution and only if you received the program in object code or executable form with such an offer, in accord with Subsection b above.) The source code for a work means the preferred form of the work for making modifications to it. For an executable work, complete source code means all the source code for all modules it contains, plus any associated interface definition files, plus the scripts used to control compilation and installation of the executable. However, as a special exception, the source code distributed need not include anything that is normally distributed (in either source or binary form) with the major components (compiler, kernel, and so on) of the operating system on which the executable runs, unless that component itself accompanies the executable. If distribution of executable or object code is made by offering access to copy from a designated place, then offering equivalent access to copy the source code from the same place counts as distribution of the source code, even though third parties are not compelled to copy the source along with the object code.

4. You may not copy, modify, sublicense, or distribute the Program except as expressly provided under this License. Any attempt otherwise to copy, modify, sublicense or distribute the Program is void, and will automatically terminate your rights under this License. However, parties who have received copies, or rights, from you under this License will not have their licenses terminated so long as such parties remain in full compliance.

5. You are not required to accept this License, since you have not signed it. However, nothing else grants you permission to modify or distribute the Program or its derivative works. These actions are prohibited by law if you do not accept this License. Therefore, by modifying or distributing the Program (or any work based on the Program), you indicate your acceptance of this License to do so, and all its terms and conditions for copying, distributing or modifying the Program or works based on it.

6. Each time you redistribute the Program (or any work based on the Program), the recipient automatically receives a license from the original licensor to copy, distribute or modify the Program subject to these terms and conditions. You may not impose any further restrictions on the recipients´ exercise of the rights granted herein. You are not responsible for enforcing compliance by third parties to this License.

7. If, as a consequence of a court judgment or allegation of patent infringement or for any other reason (not limited to patent issues), conditions are imposed on you (whether by court order, agreement or otherwise) that contradict the conditions of this License, they do not excuse you from the conditions of this License. If you cannot distribute so as to satisfy simultaneously your obligations under this License and any other pertinent obligations, then as a consequence you may not distribute the Program at all. For example, if a patent license would not permit royalty-free redistribution of the Program by all those who receive copies directly or indirectly through you, then the only way you could satisfy both it and this License would be to refrain entirely from distribution of the Program.
If any portion of this section is held invalid or unenforceable under any particular circumstance, the balance of the section is intended to apply and the section as a whole is intended to apply in other circumstances.
It is not the purpose of this section to induce you to infringe any patents or other property right claims or to contest validity of any such claims; this section has the sole purpose of protecting the integrity of the free software distribution system, which is implemented by public license practices. Many people have made generous contributions to the wide range of software distributed through that system in reliance on consistent application of that system; it is up to the author/donor to decide if he or she is willing to distribute software through any other system and a licensee cannot impose that choice. This section is intended to make thoroughly clear what is believed to be a consequence of the rest of this License.

8. If the distribution and/or use of the Program is restricted in certain countries either by patents or by copyrighted interfaces, the original copyright holder who places the Program under this License may add an explicit geographical distribution limitation excluding those countries, so that distribution is permitted only in or among countries not thus excluded. In such case, this License incorporates the limitation as if written in the body of this License.

9. The Free Software Foundation may publish revised and/or new versions of the General Public License from time to time. Such new versions will be similar in spirit to the present version, but may differ in detail to address new problems or concerns.
Each version is given a distinguishing version number. If the Program specifies a version number of this License which applies to it and „any later version ", you have the option of following the terms and conditions either of that version or of any later version published by the Free Software Foundation. If the Program does not specify a version number of this License, you may choose any version ever published by the Free Software Foundation.

10. If you wish to incorporate parts of the Program into other free programs whose distribution conditions are different, write to the author to ask for permission. For software which is copyrighted by the Free Software Foundation, write to the Free Software Foundation; we sometimes make exceptions for this. Our decision will be guided by the two goals of preserving the free status of all derivatives of our free software and of promoting the sharing and reuse of software generally.

NO WARRANTY

11. BECAUSE THE PROGRAM IS LICENSED FREE OF CHARGE, THERE IS NO WARRANTY FOR THE PROGRAM, TO THE EXTENT PERMITTED BY APPLICABLE LAW. EXCEPT WHEN OTHERWISE STATED IN WRITING THE COPYRIGHT HOLDERS AND/OR OTHER PARTIES PROVIDE THE PROGRAM „AS IS "WITHOUT WARRANTY OF ANY KIND, EITHER EXPRESSED OR IMPLIED, INCLUDING, BUT NOT LIMITED TO, THE IMPLIED WARRANTIES OF MERCHANTABILITY AND FITNESS FOR A PARTICULAR PURPOSE. THE ENTIRE RISK AS TO THE QUALITY AND PERFORMANCE OF THE PROGRAM IS WITH YOU. SHOULD THE PROGRAM PROVE DEFECTIVE, YOU ASSUME THE COST OF ALL NECESSARY SERVICING, REPAIR OR CORRECTION.

12. IN NO EVENT UNLESS REQUIRED BY APPLICABLE LAW OR AGREED TO IN WRITING WILL ANY COPYRIGHT HOLDER, OR ANY OTHER PARTY WHO MAY MODIFY AND/OR REDISTRIBUTE THE PROGRAM AS PERMITTED ABOVE, BE LIABLE TO YOU FOR DAMAGES, INCLUDING ANY GENERAL, SPECIAL, INCIDENTAL OR CONSEQUENTIAL DAMAGES ARISING OUT OF THE USE OR INABILITY TO USE THE PROGRAM (INCLUDING BUT NOT LIMITED TO LOSS OF DATA OR DATA BEING RENDERED INACCURATE OR LOSSES SUSTAINED BY YOU OR THIRD PARTIES OR A FAILURE OF THE PROGRAM TO OPERATE WITH ANY OTHER PROGRAMS), EVEN IF SUCH HOLDER OR OTHER PARTY HAS BEEN ADVISED OF THE POSSIBILITY OF SUCH DAMAGES.

END OF TERMS AND CONDITIONS

How to Apply These Terms to Your New Programs

If you develop a new program, and you want it to be of the greatest possible use to the public, the best way to achieve this is to make it free software which everyone can redistribute and change under these terms.
To do so, attach the following notices to the program. It is safest to attach them to the start of each source file to most effectively state the exclusion of warranty; and each file should have at least the "copyright" line and a pointer to where the full notice is found.

<one line to give the program´s name and a brief idea of what it does.>
Copyright (C) <year> <name of author>

This program is free software: you can redistribute it and/or modify it under the terms of the GNU General Public License as published by the Free Software Foundation, either version 3 of the License, or (at your option) any later version.

This program is distributed in the hope that it will be useful, but WITHOUT ANY WARRANTY; without even the implied warranty of MERCHANTABILITY or FITNESS FOR A PARTICULAR PURPOSE. See the GNU General Public License for more details.

You should have received a copy of the GNU General Public License along with this program. If not, see <http://www.gnu.org/licenses/>.

Also add information on how to contact you by electronic and paper mail.
If the program does terminal interaction, make it output a short notice like this when it starts in an interactive mode:

<program> Copyright (C) <year> <name of author>
This program comes with ABSOLUTELY NO WARRANTY; for details type `show w´.
This is free software, and you are welcome to redistribute it under certain conditions;
type `show c´for details.

The hypothetical commands `show w´and `show c´should show the appropriate parts of the General Public License. Of course, your program´s commands might be different; for a GUI interface, you would use an "about box".
You should also get your employer (if you work as a programmer) or school, if any, to sign a "copyright disclaimer" for the program, if necessary. For more information on this, and how to apply and follow the GNU GPL, see <http://www.gnu.org/licenses/>.
The GNU General Public License does not permit incorporating your program into proprietary programs. If your program is a subroutine library, you may consider it more useful to permit linking proprietary applications with the library. If this is what you want to do, use the GNU Lesser General Public License instead of this License. But first, please read <http://www.gnu.org/philosophy/why-not-lgpl.html>.

terra



Bredenhop 20 32609 Hüllhorst
Tel +49 5744.944-0_Fax +49 5744.944-100
www.wortmann.de

WORTMANN AG