X841UHD-2 OUTLINE

The center of gravity: It is within 10mm from active center.

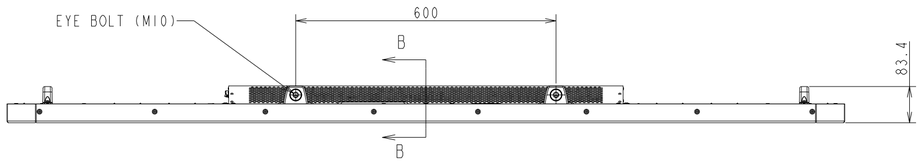

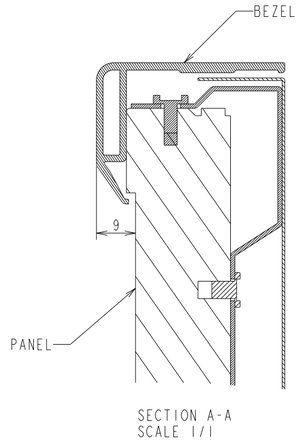

SECTION A-A
SCALE 1/1

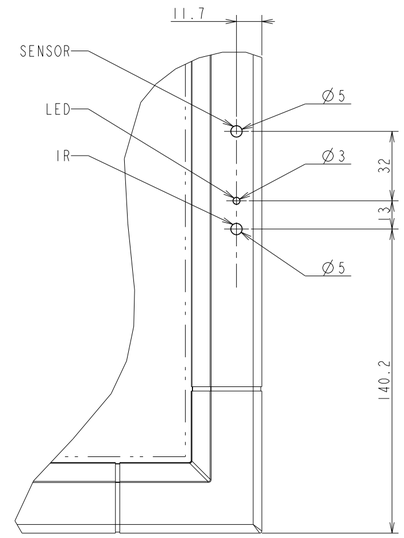

DETAIL A
SCALE 1/2

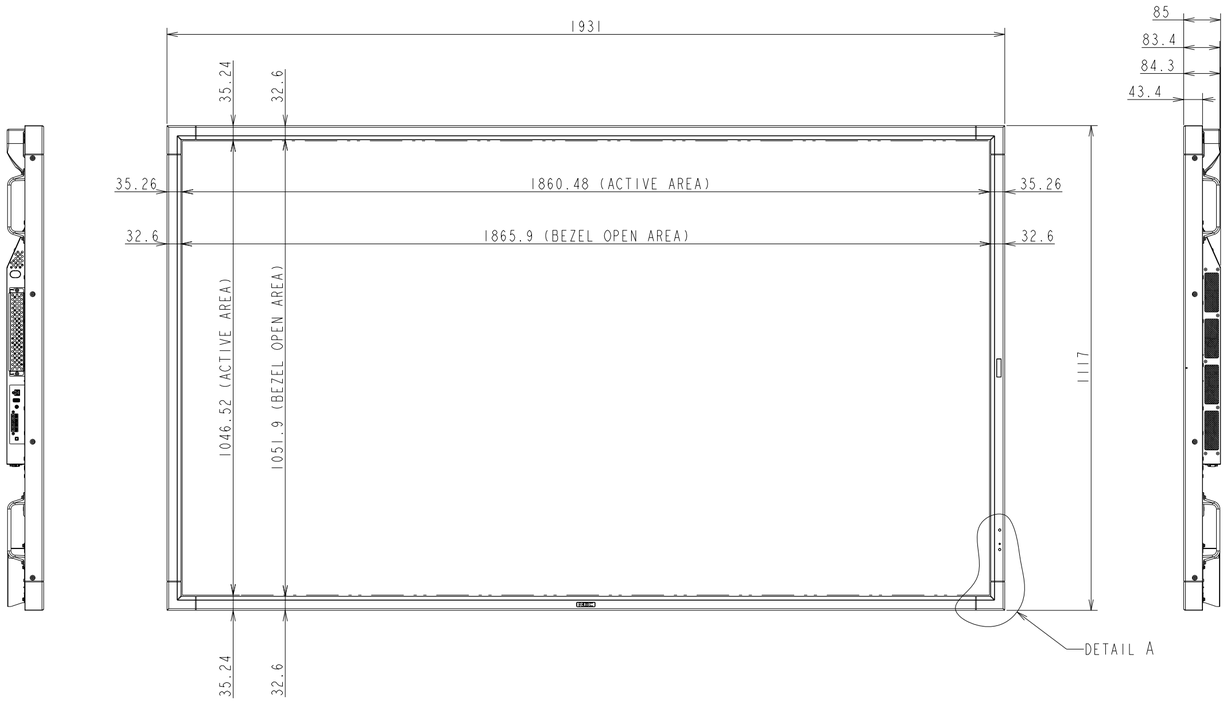

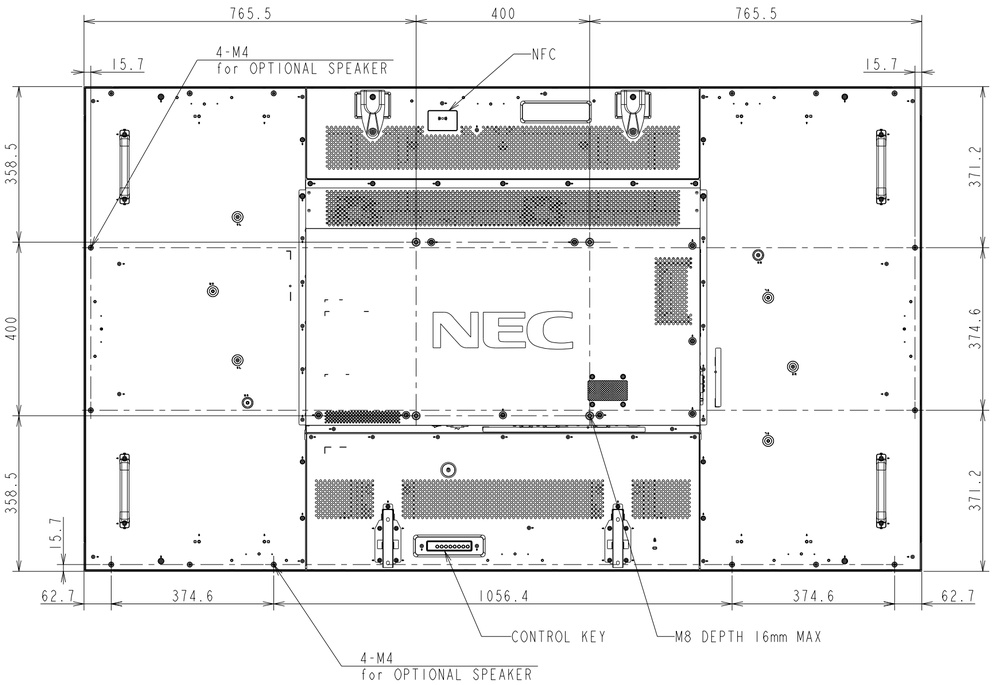

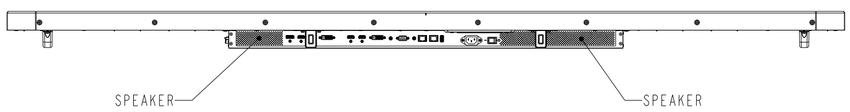

UNIT:mm
X841UHD-2
NEC Display Solutions
2016/04/18