DS-LEDIF Series

For Samsung IF015H, IF020H, IF025H

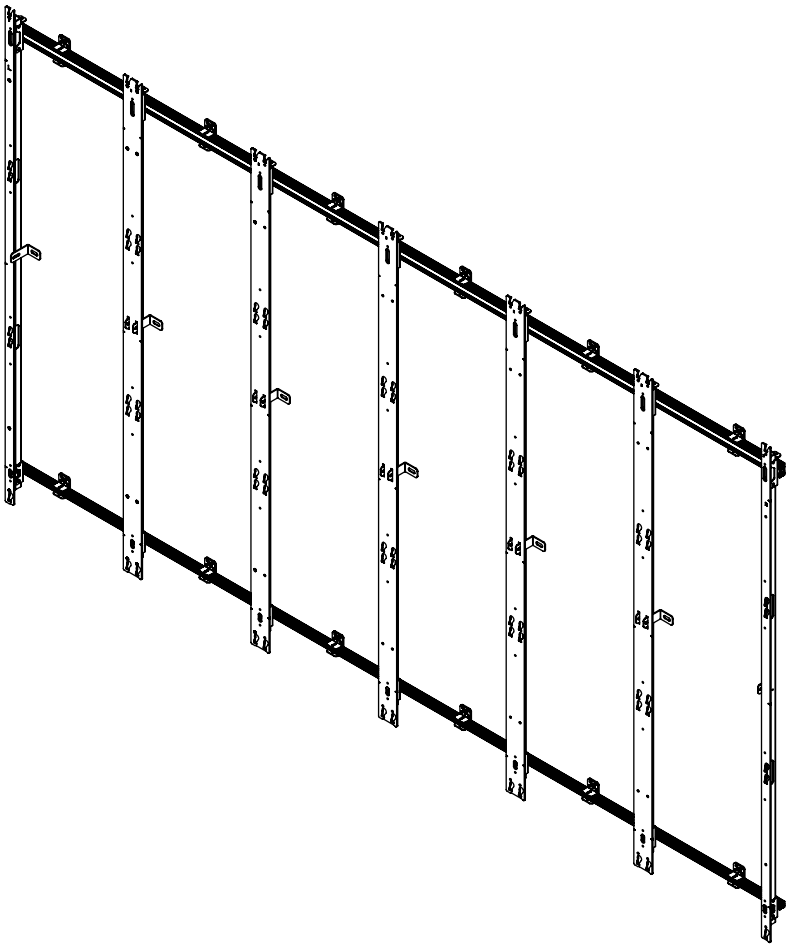

ENG

*Actual configuration may vary

2018-03-14 #:146-9020-4 (2019-05-16)

⚠ WARNING

ENG - This product is designed to be installed on plywood walls. Hardware is included for plywood installation. Before installing make sure the supporting surface will support the combined load of the equipment and hardware. Screws must be tightly secured. Do not overtighten screws or damage can occur and product may fail. Never exceed the Maximum Load Capacity. Always use an assistant or mechanical lifting equipment to safely lift and position equipment. This product is intended for indoor use only. Use of this product outdoors could lead to product failure or personal injury. Be careful not to pinch fingers when operating the mount. For support please call customer care at 1-800-865-2112.

ENG Symbols



ENG **WARNING**

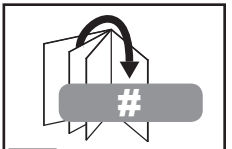

ENG Skip to step.

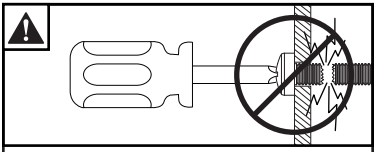

ENG Do not overtighten screws.

To properly tighten screws: Tighten until screw head makes contact, then tighten another 1/2 turn. Do not overtighten screws.

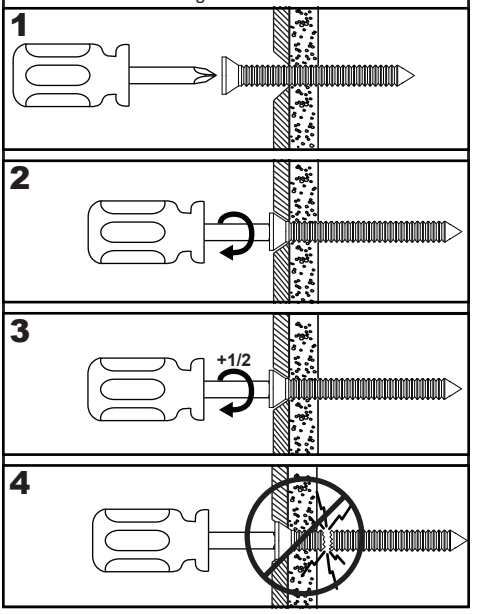

ENG Tools Needed for Assembly.

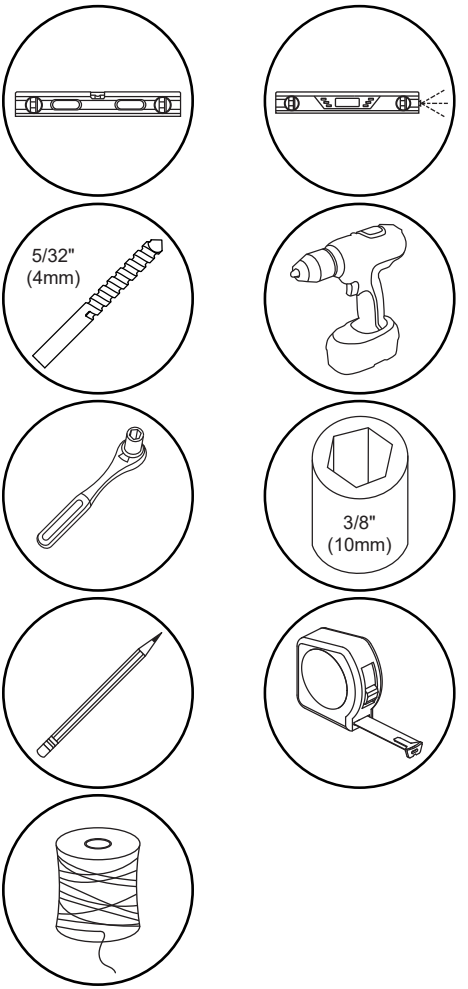

ENG This page intentionally left blank.

ENG Parts (Before beginning, make sure you have all parts shown below).

Parts List	Description
A	left column
B	right column
C	inside vertical column
D	top horizontal asy
E	bottom horizontal asy
F	top vertical spacer
G	horizontal spacer
H	M5 x 8mm socket screw
I	#14 x 2.5" wood screw
J	M5 square nut (spare)
K	3mm allen wrench two-tip T-handle
L	wall plate shim
M	connector plate
N	M5 x 5mm set screw
O	bottom vertical spacer

ENG Refer to parts list included for your specific model.

A
left column



B
right column

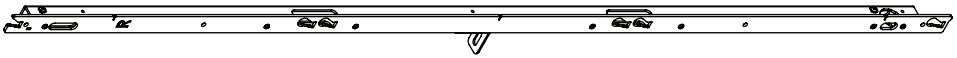

C
inside vertical column

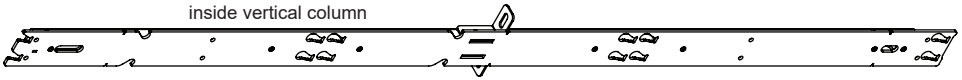

D
top horizontal assembly



E
bottom horizontal assembly



F
top vertical spacer

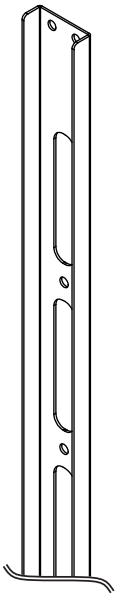

O
bottom vertical spacer

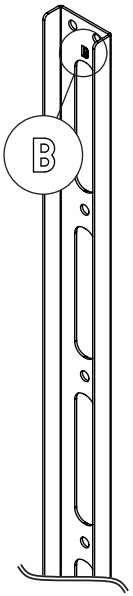

G
horizontal spacer

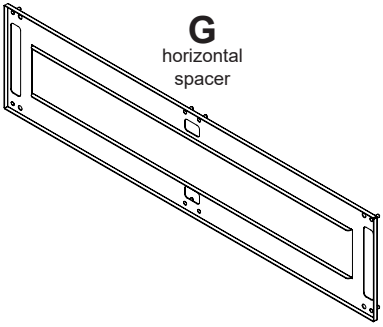

H
M5 x 8mm



I
#14 x 2.5" wood screw

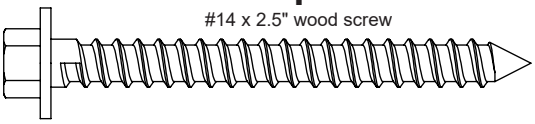

J
M5 square nut

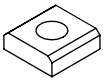

K
3mm allen wrench
two-tip T-handle

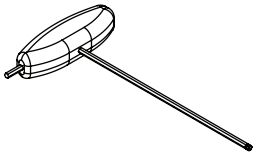

L
wall plate shim



M
connector plate

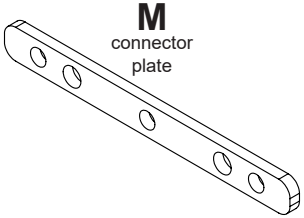

N
M5 x 5mm set screw



1

ENG Refer to layout drawing included for your specific model.

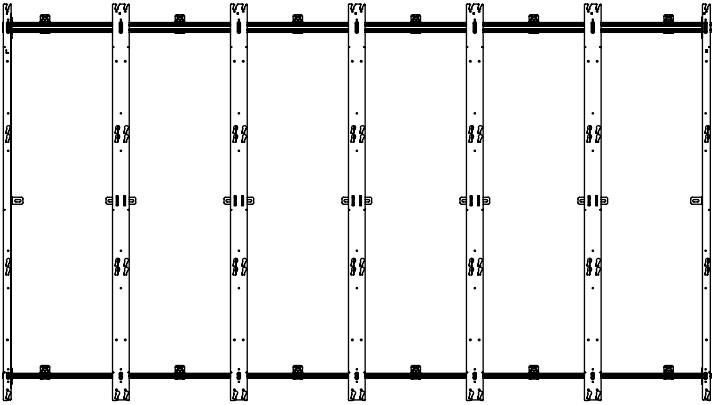

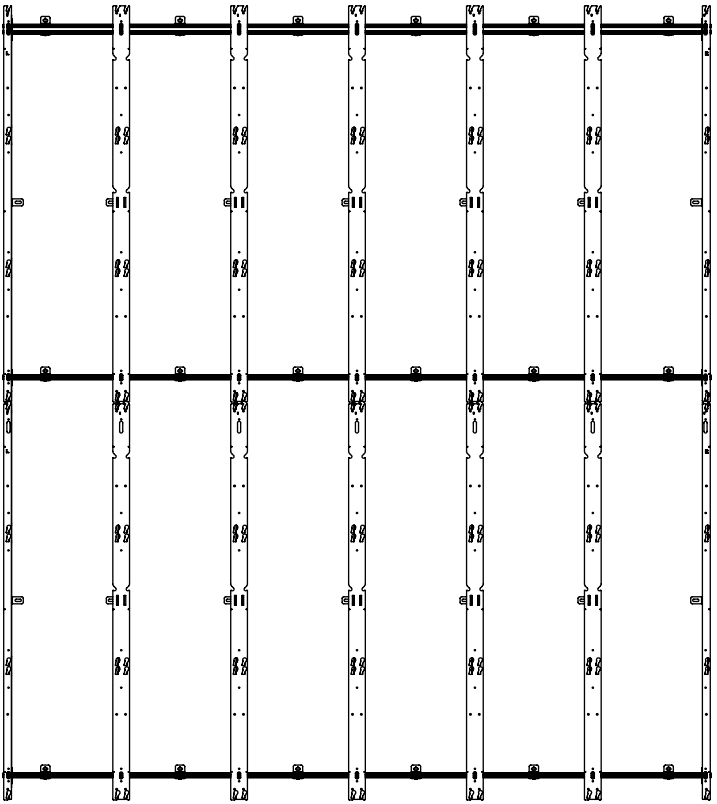

2-1

ENG Optional: If connecting two top horizontal extrusions, first remove inner hook-on brackets.

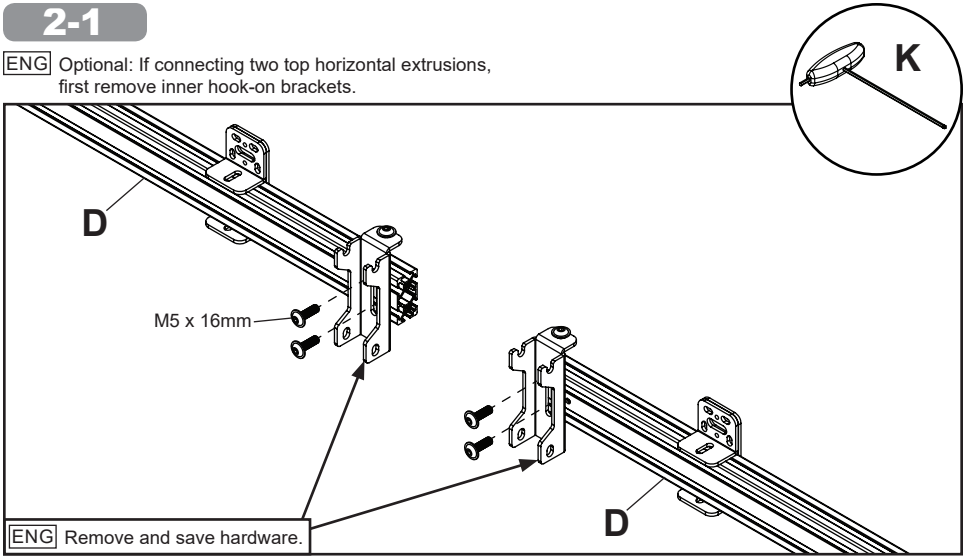

2-2

ENG Use extrusion connectors to connect top horizontal extrusions.

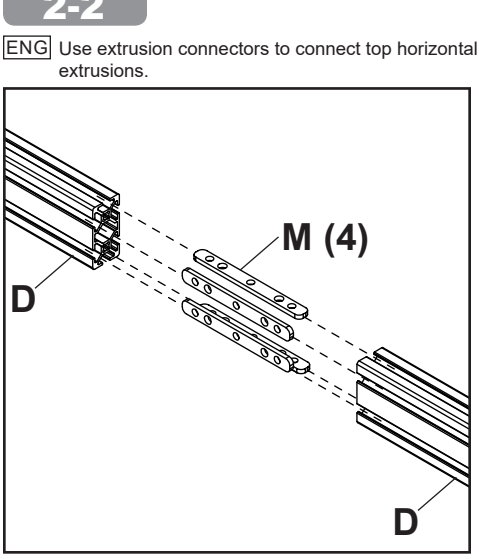

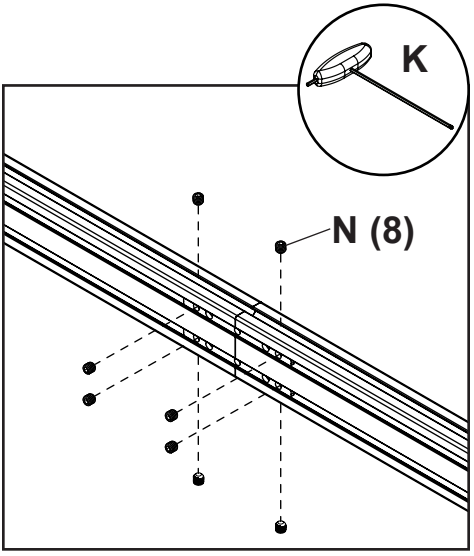

2-3

ENG Replace one hook-on bracket in between connected extrusions.

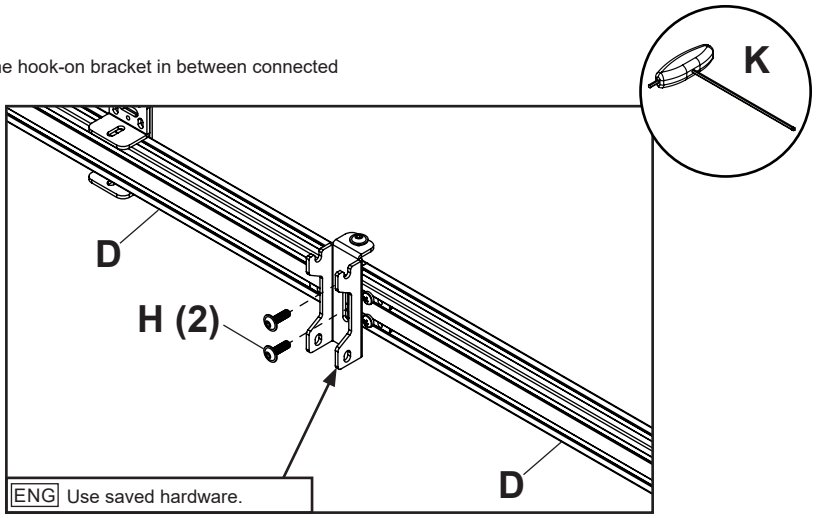

2-4

ENG Optional: If connecting two bottom horizontal extrusions, first remove inner hook-on brackets

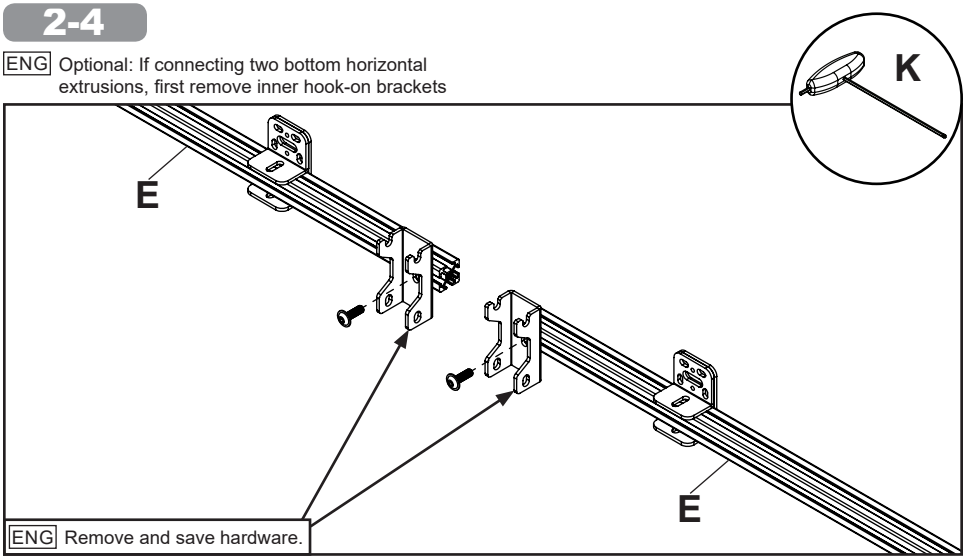

2-5

ENG Use extrusion connectors to connect bottom horizontal extrusions.

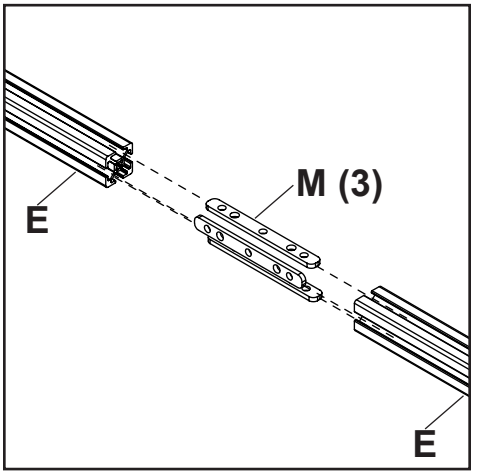

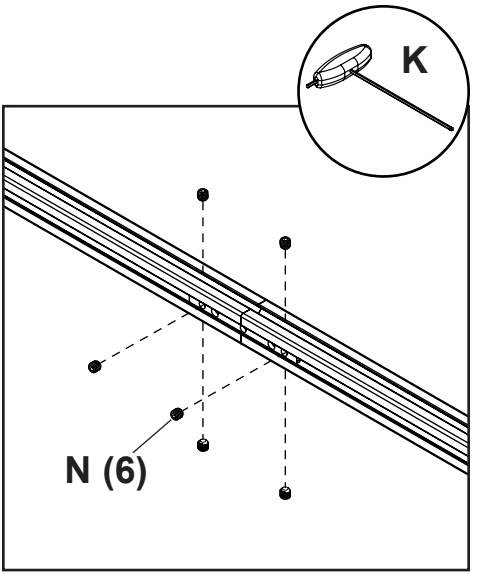

2-6

ENG Replace one hook-on bracket in between connected extrusions.

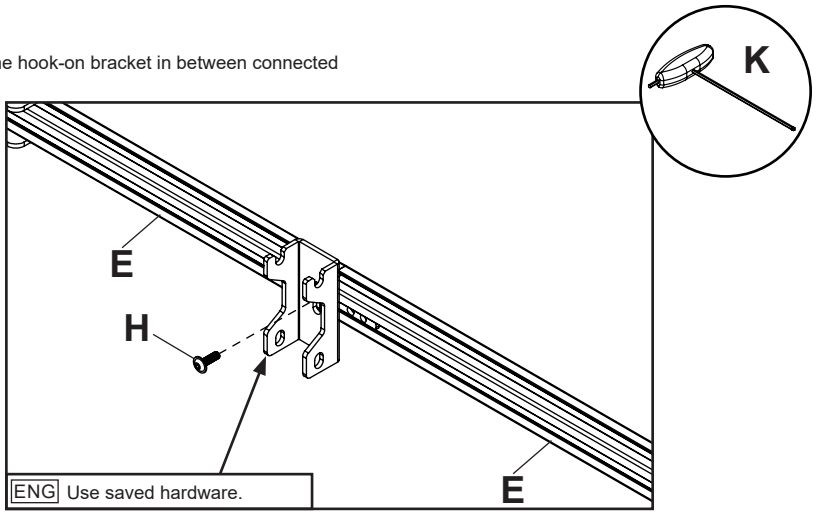

3

⚠ WARNING

ENG - When installing Peerless wall mounts on a wood stud wall covered with plywood, verify that the wood studs are a minimum of 2" x 4" nominal size and plywood is a minimum Grade BC, 1/2" (13 mm) thick. Plywood may be covered by gypsum board (drywall) up to 5/8" thick.

3-1

ENG Level top horizontal extrusion and mark mounting holes on plywood (must be minimum Grade BC, 1/2" (13mm) thick.)

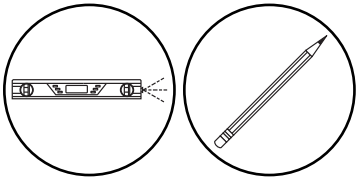

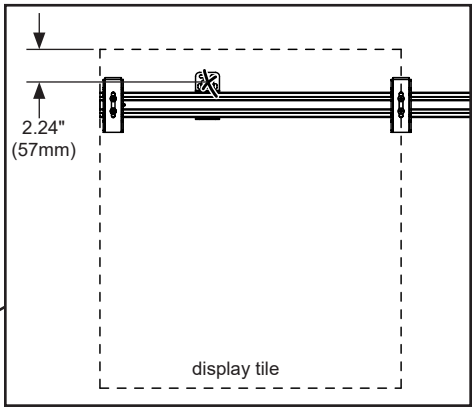

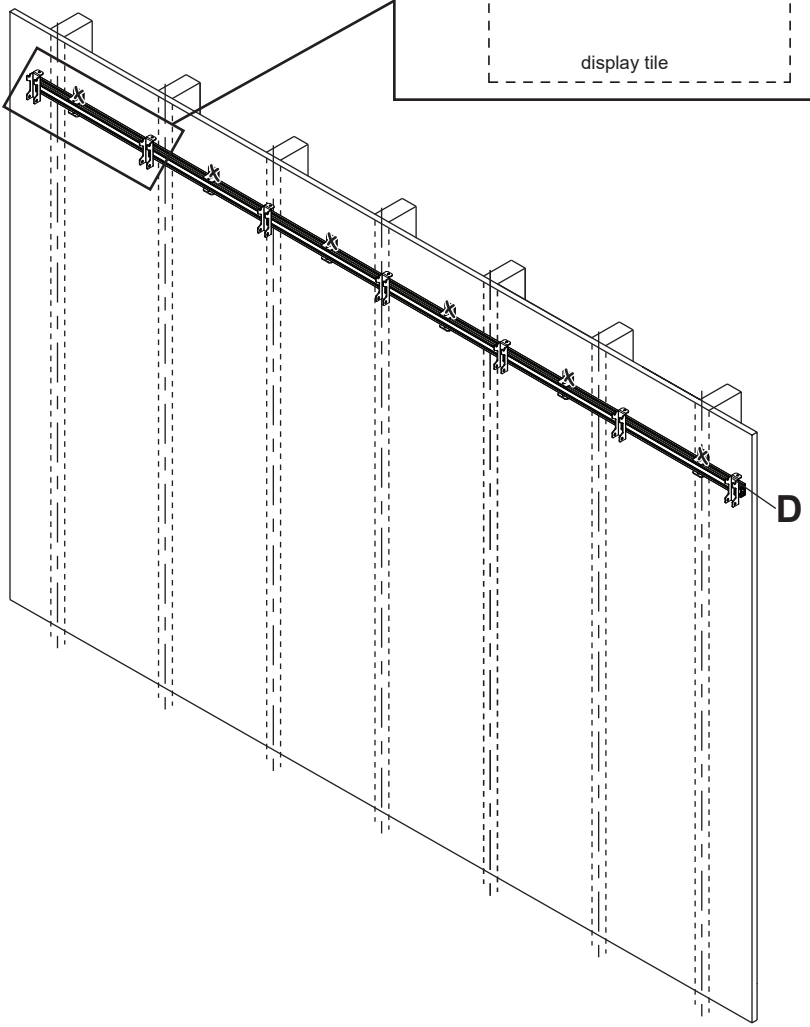

3-2

ENG Use a laser level to keep mounting holes level.

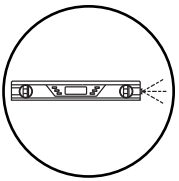

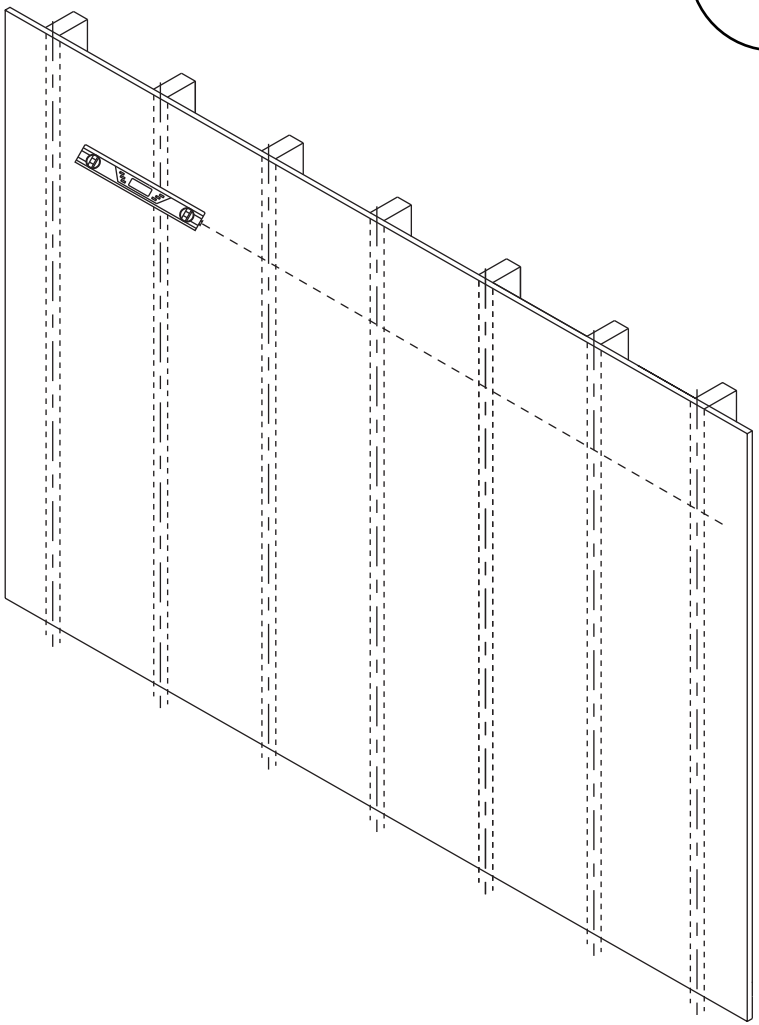

3-3

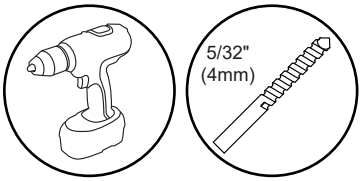

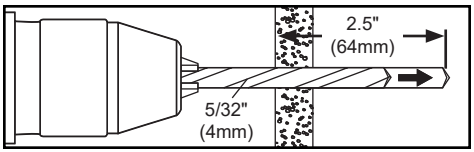

ENG Drill mounting holes into supporting surface (2.5" (64mm) minimum depth required).

3-4

ENG Level extrusion. Install using wood screws provided.

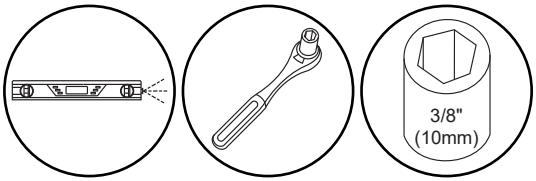

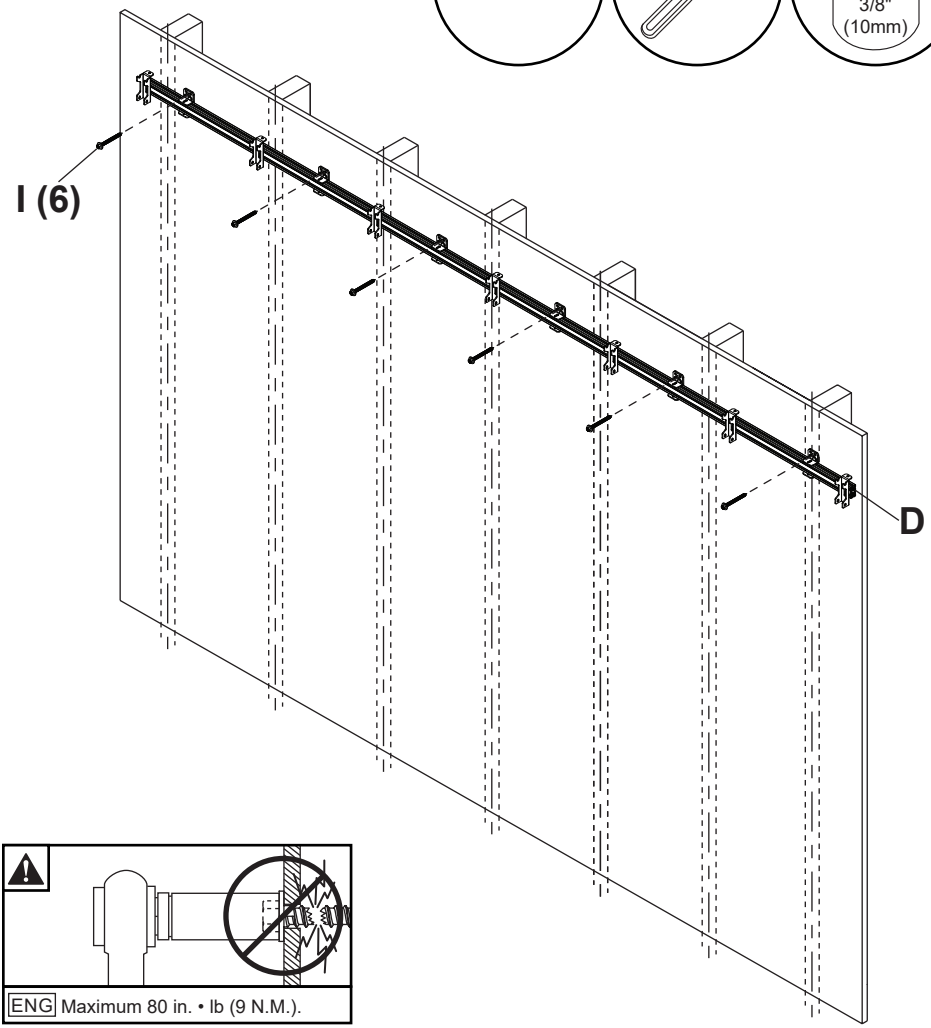

ENG Maximum 80 in. • lb (9 N.M.).

3-5

ENG Secure vertical spacers to the wall flush with the horizontal extrusion.

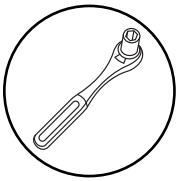

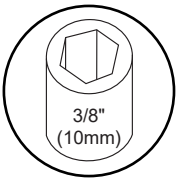

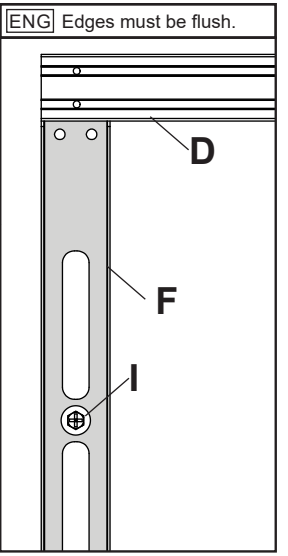

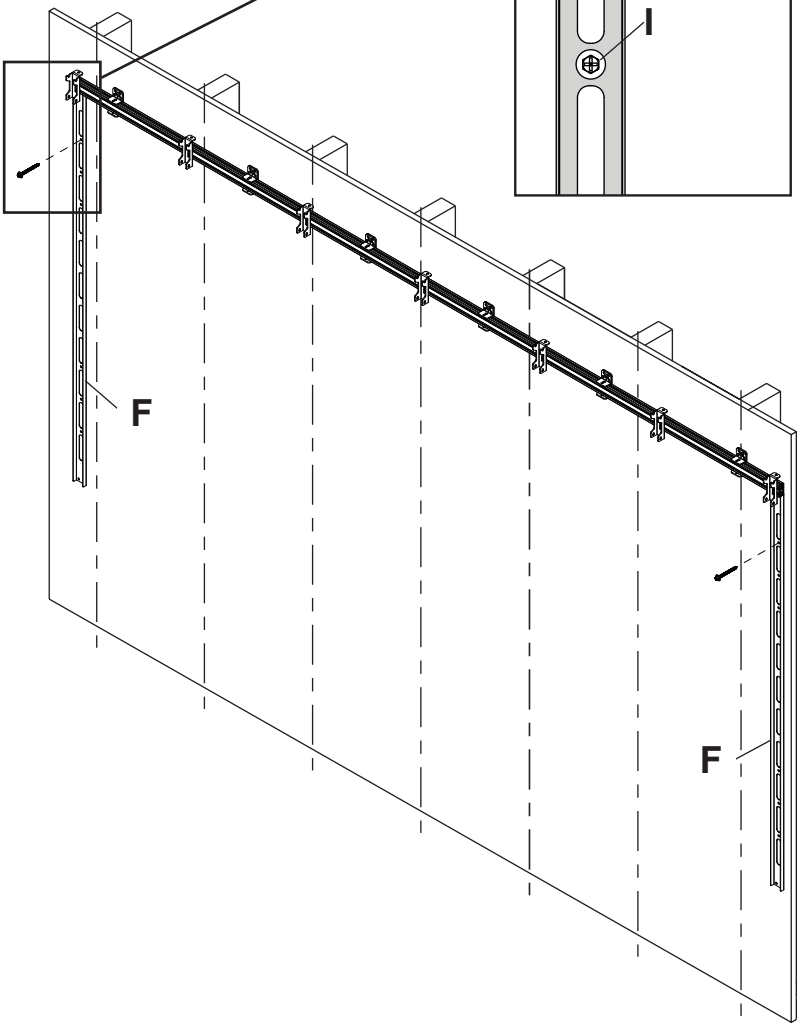

3-6

ENG Use third vertical spacer to align bottom horizontal extrusion flush with vertical spacer, then mark mounting holes on plywood (must be minimum Grade BC, 1/2" (13mm) thick.)

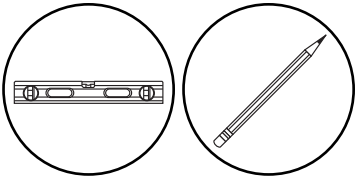

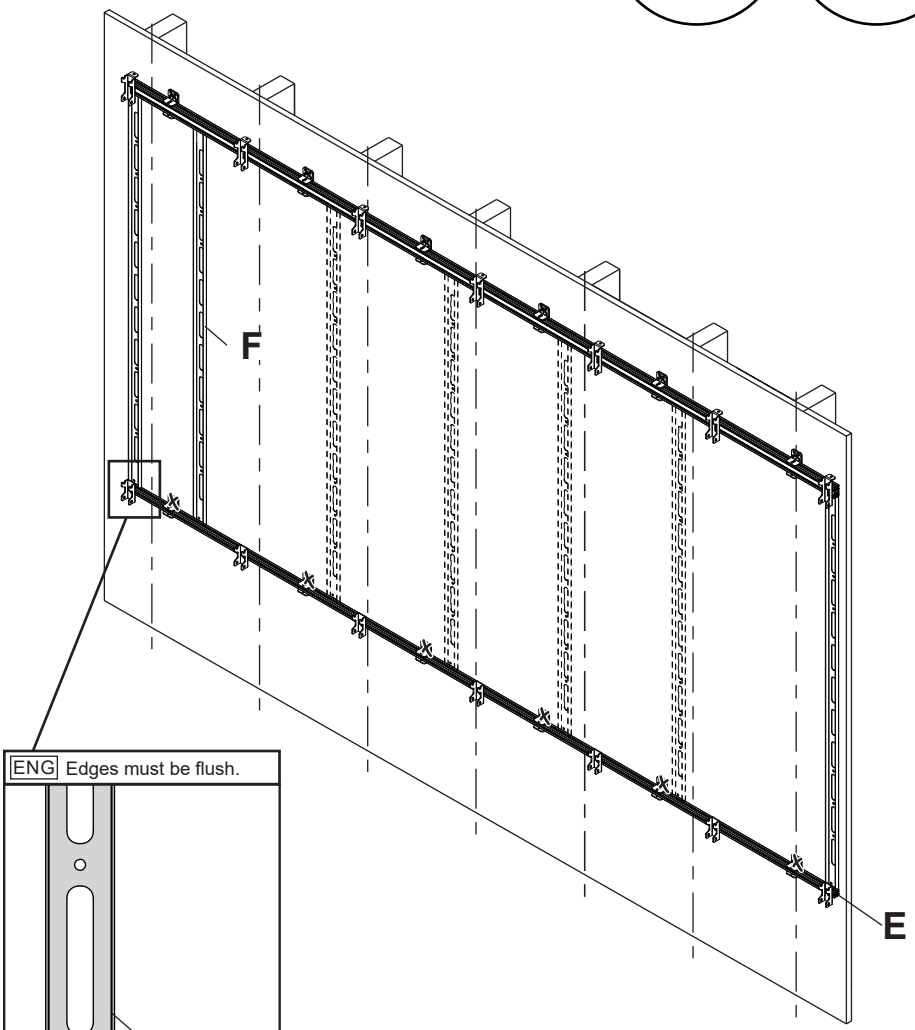

3-7

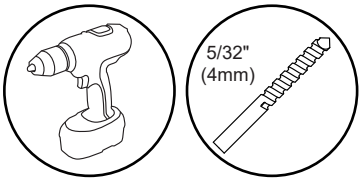

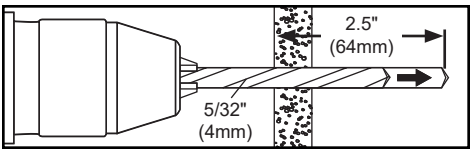

ENG Drill mounting holes into supporting surface (2.5" (64mm) minimum depth required).

3-8

ENG Use third vertical spacer to align bottom horizontal extrusion flush with vertical spacer, then install using wood screws provided.



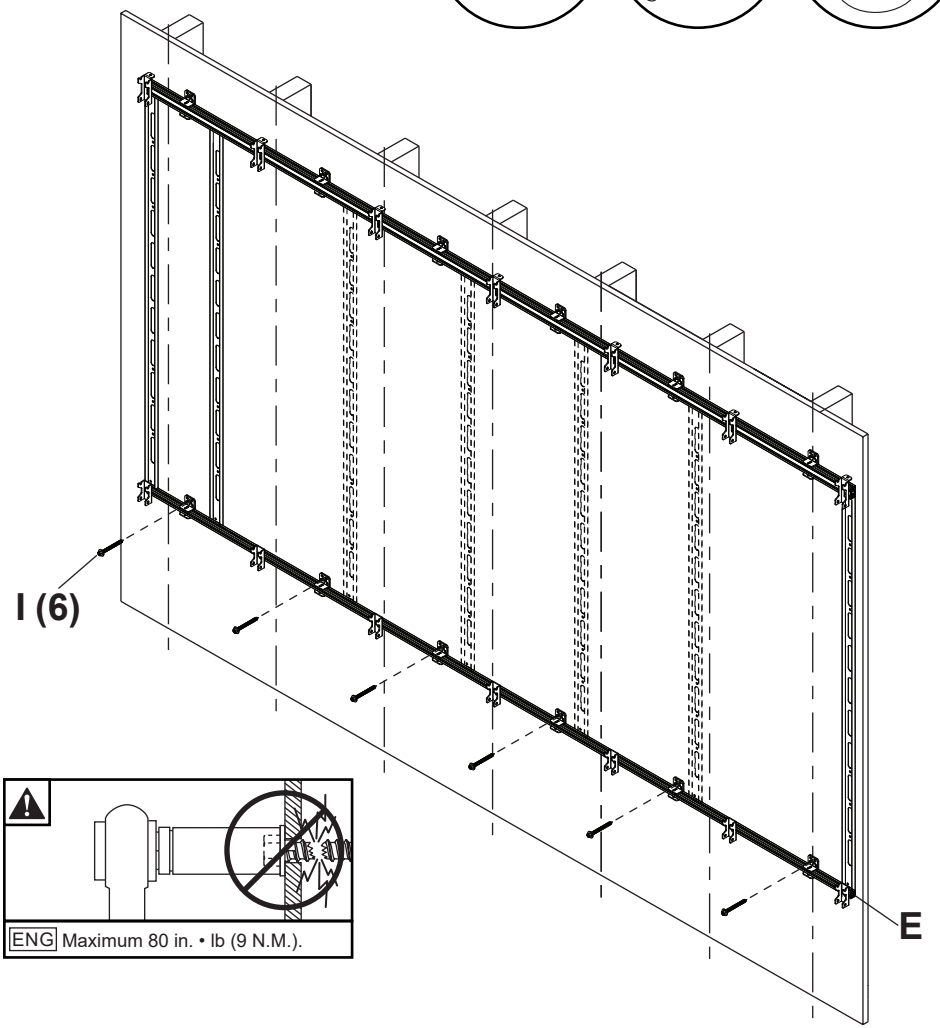

ENG Maximum 80 in. • lb (9 N.M.).

4

ENG Refer to layout drawing included for your specific model.

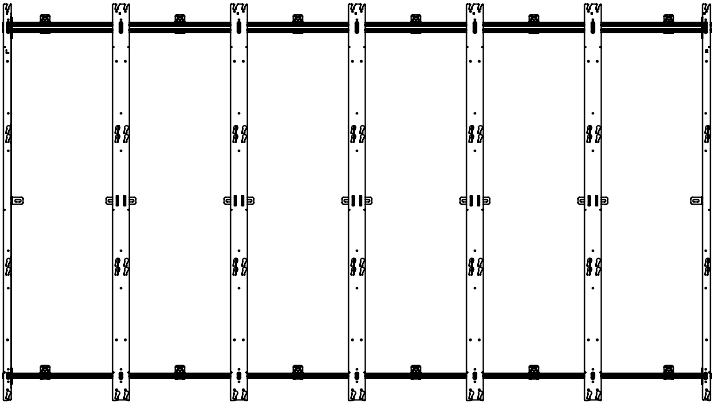



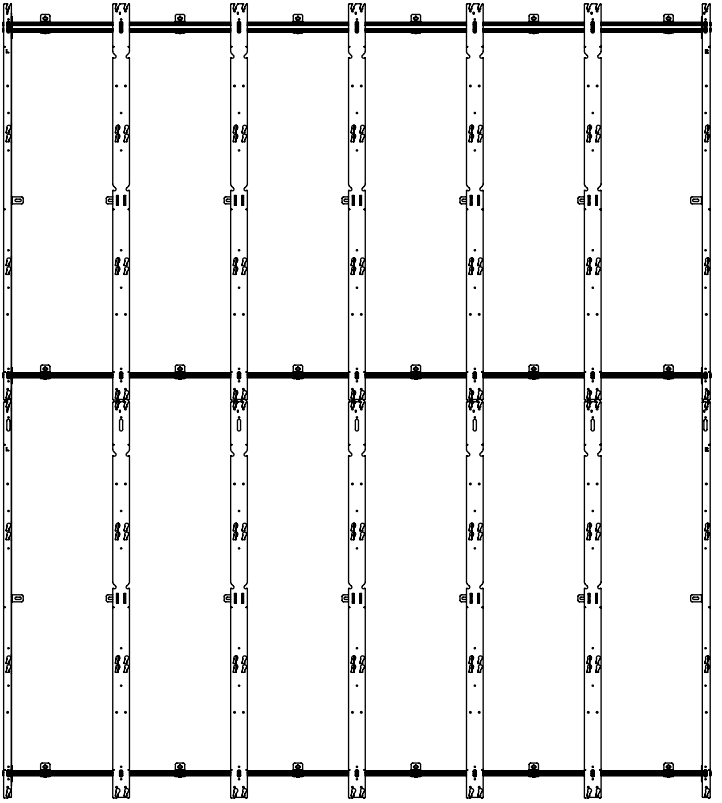



4-1

ENG For larger configurations only; Secure vertical spacer to the wall flush with the horizontal extrusion.

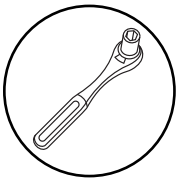

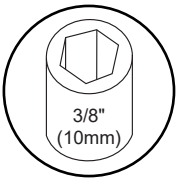

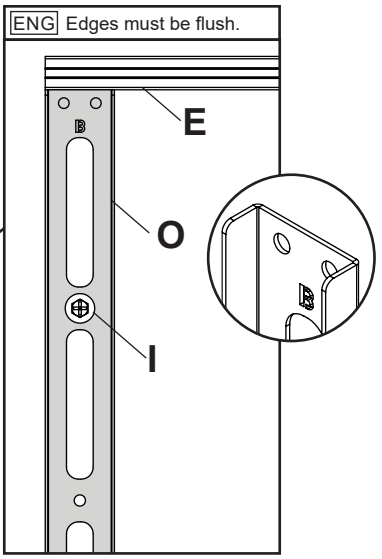

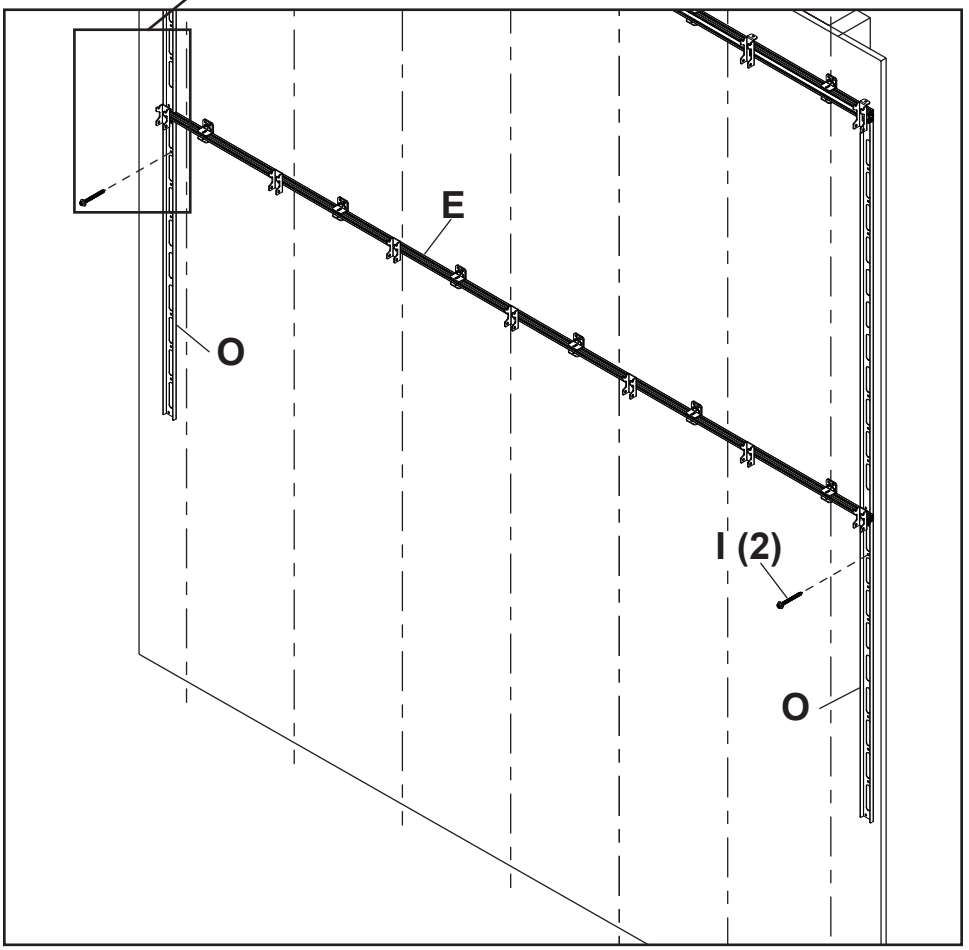

4-2

ENG Use third vertical spacer to align bottom horizontal extrusion flush with vertical spacer, then mark mounting holes on plywood (must be minimum Grade BC, 1/2" (13mm) thick.)

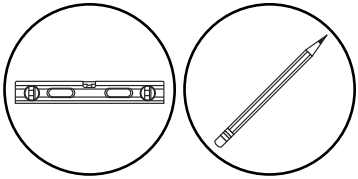

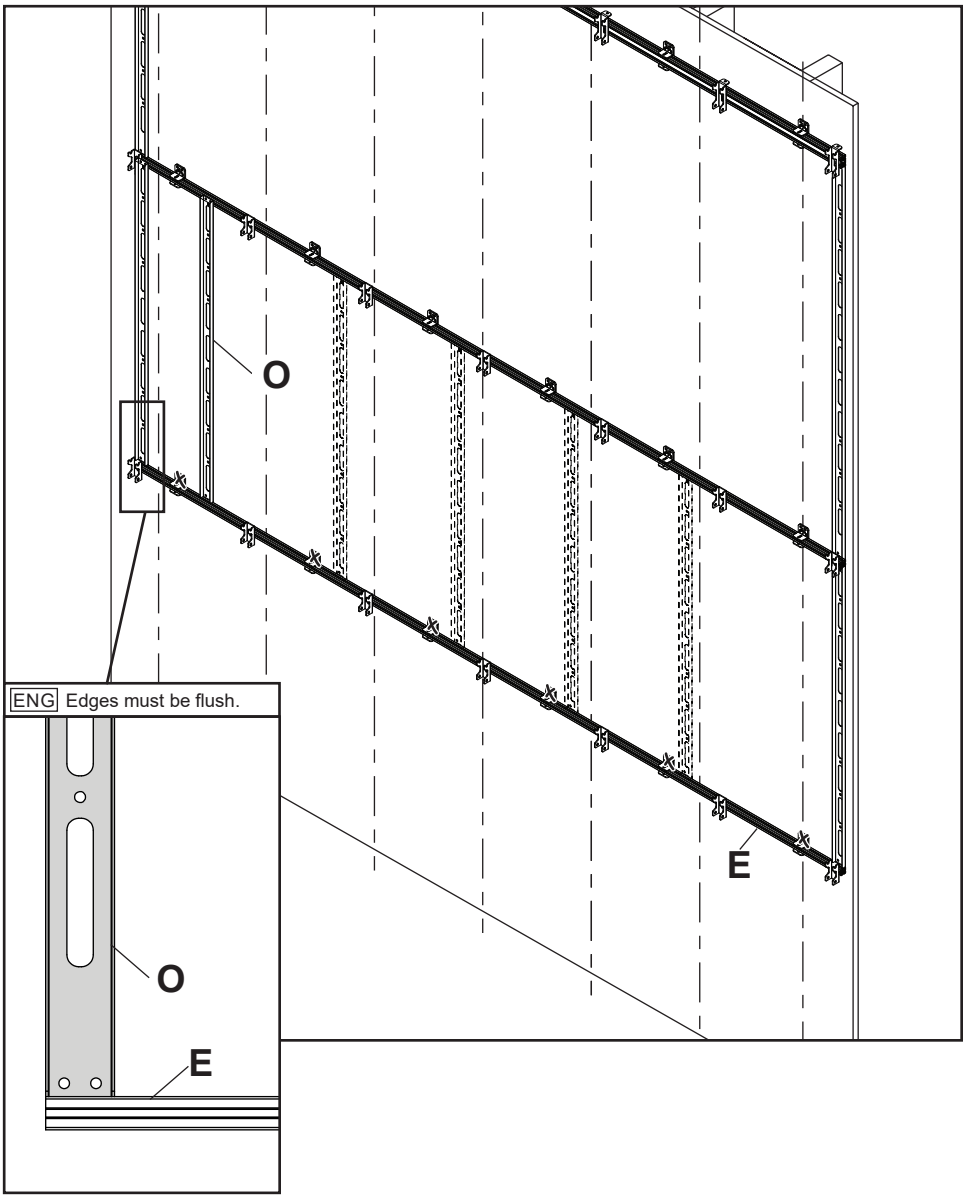

4-3

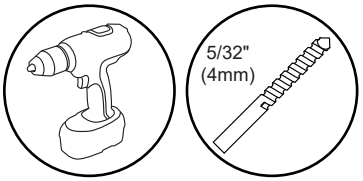

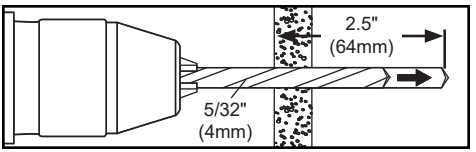

ENG Drill mounting holes into supporting surface (2.5" (64mm) minimum depth required).

4-4

ENG Use third vertical spacer to align bottom horizontal extrusion flush with vertical spacer, then install using wood screws provided.



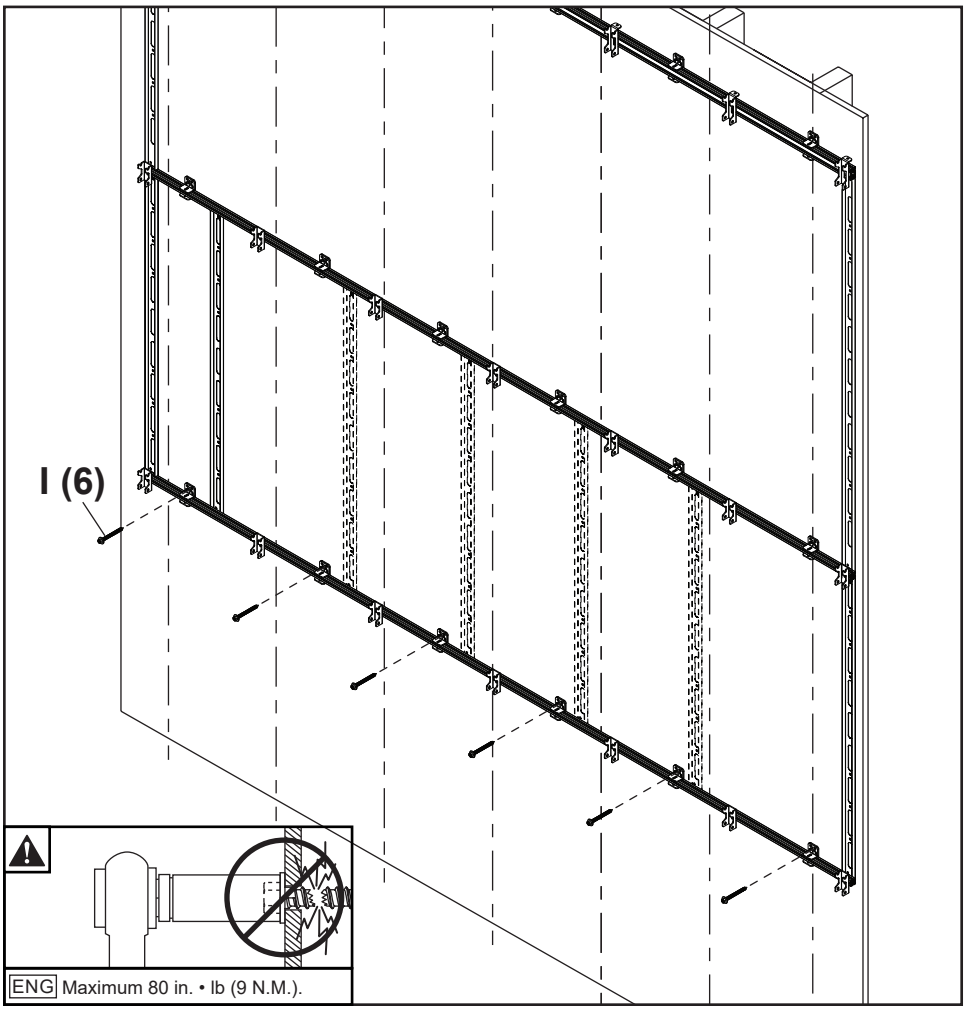

ENG Maximum 80 in. • lb (9 N.M.).

5

ENG Remove vertical spacers.

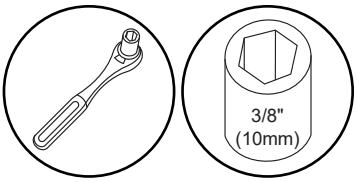

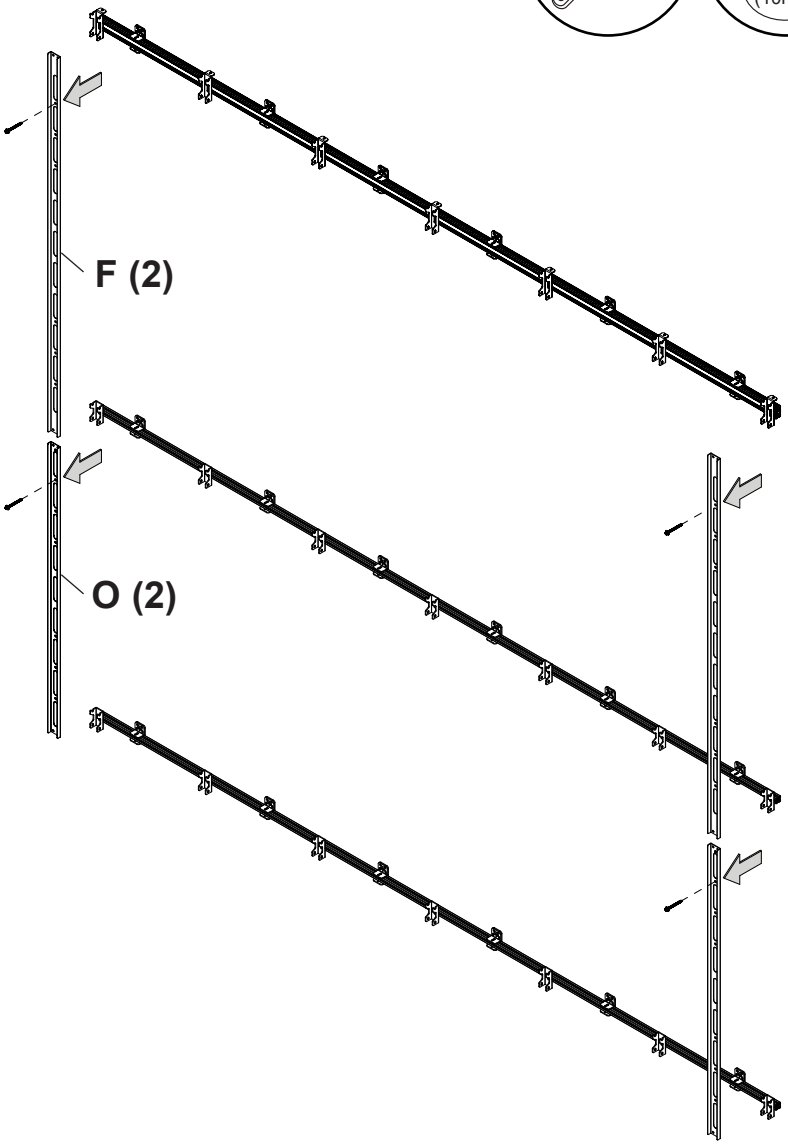

6

ENG Loosen, adjust, tighten.

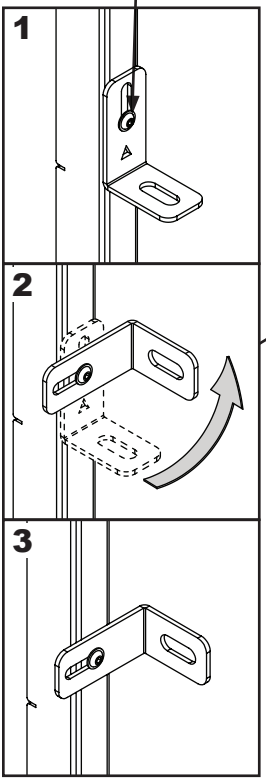

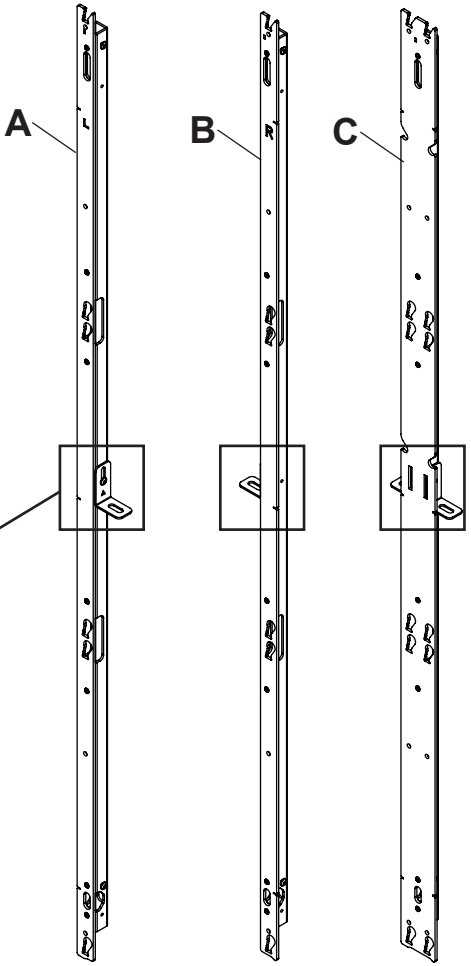

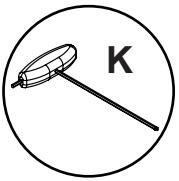

7-1

ENG Hook on and secure outer vertical columns. "L" and "R" markings designate left and right column.

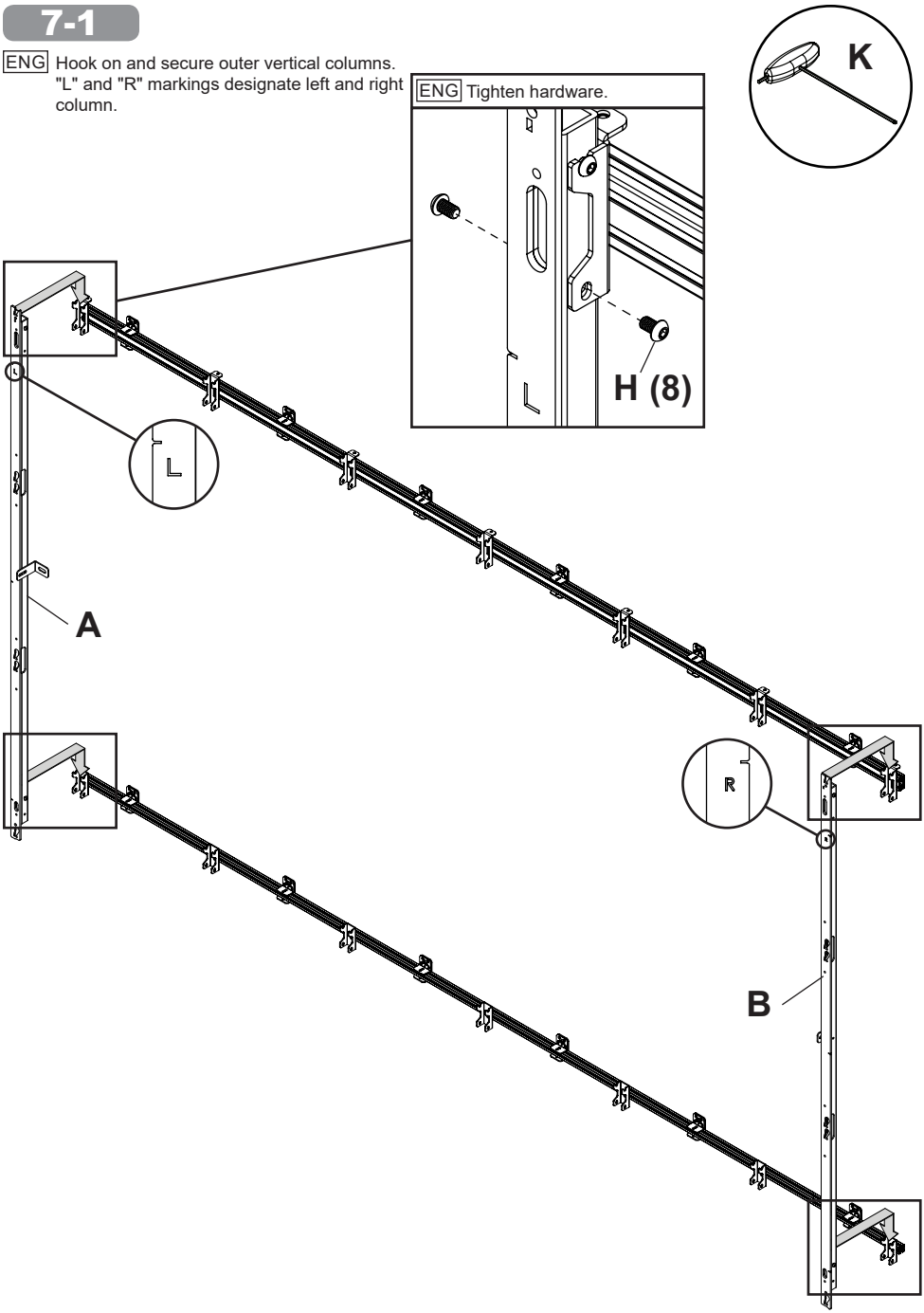

7-2

ENG Hook on and secure all inside vertical columns.

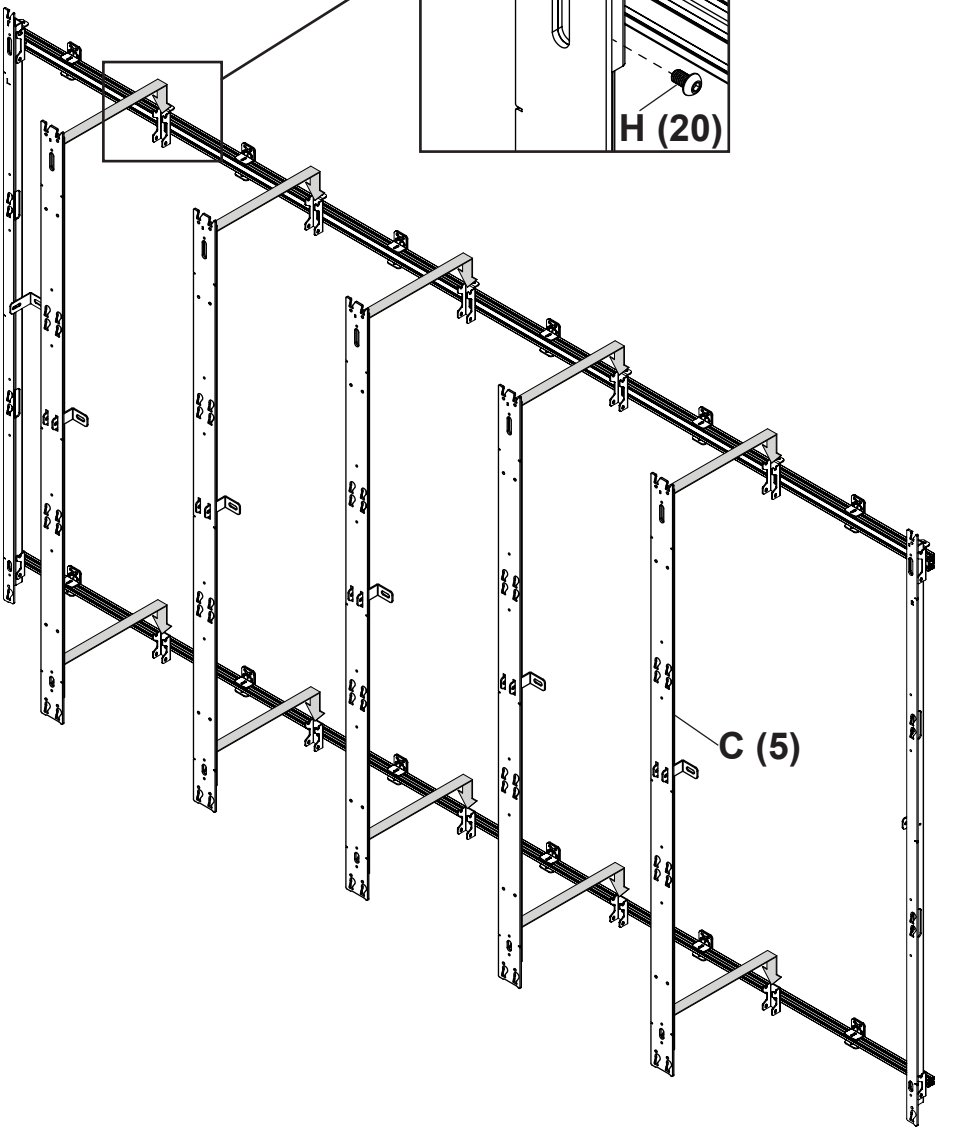

8-1

ENG Loosen hardware on vertical columns.

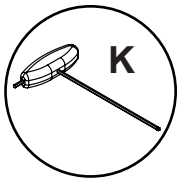

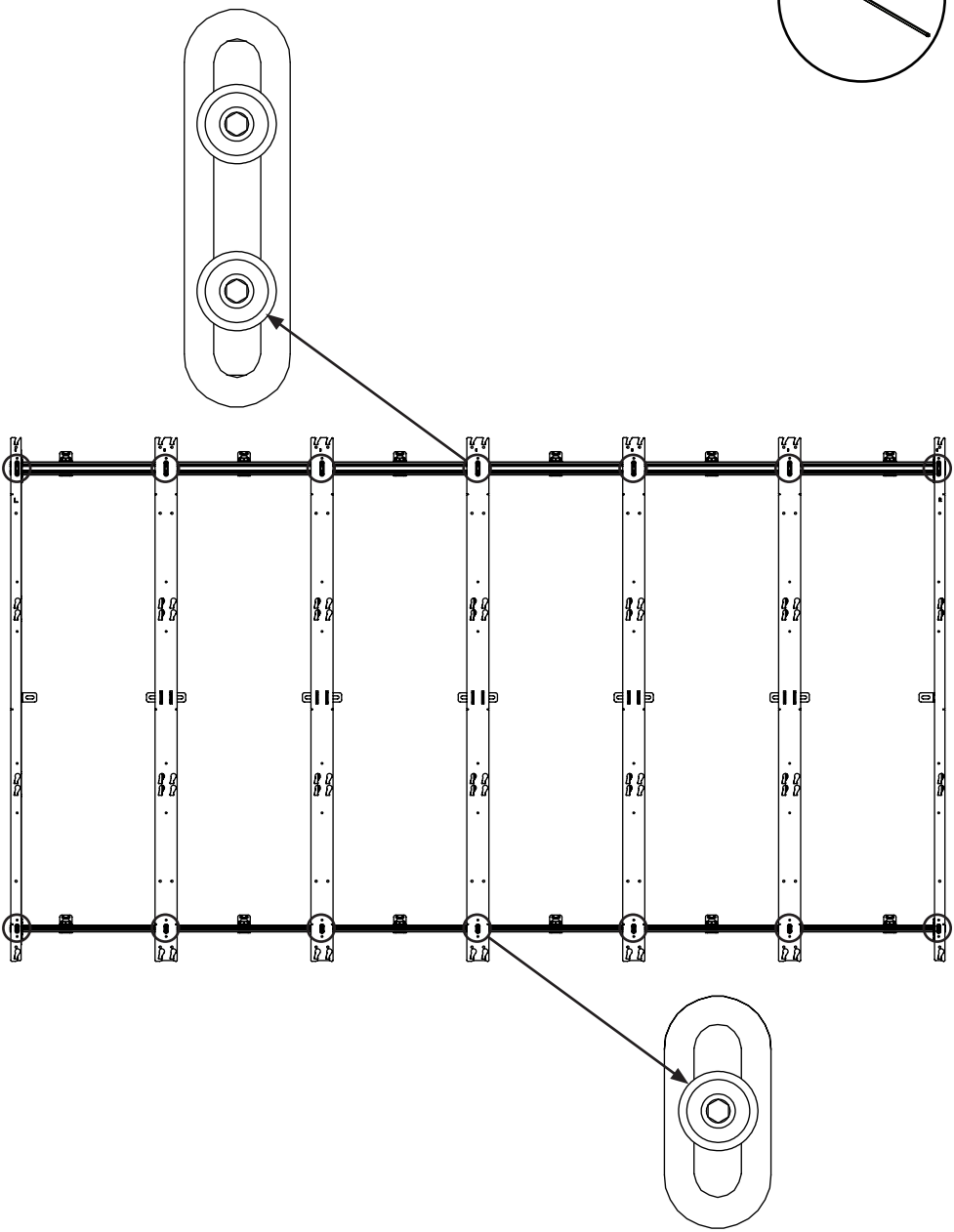

8-2

ENG Plumb and level outer columns, then tighten hardware on four corner wall plates

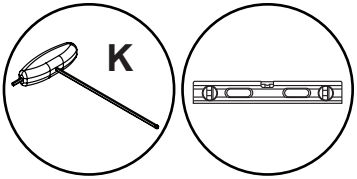

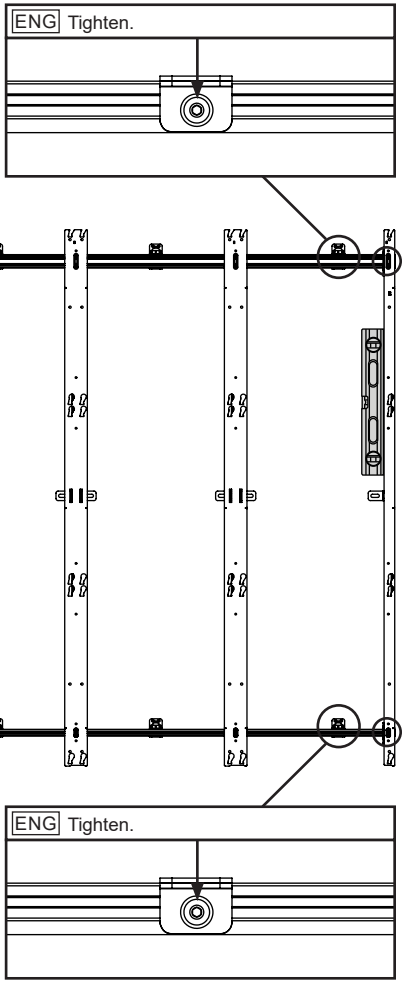

8-3

ENG Tie a string between top slots on outer columns in order to level the depth of each vertical column.

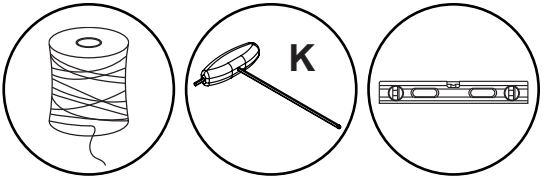

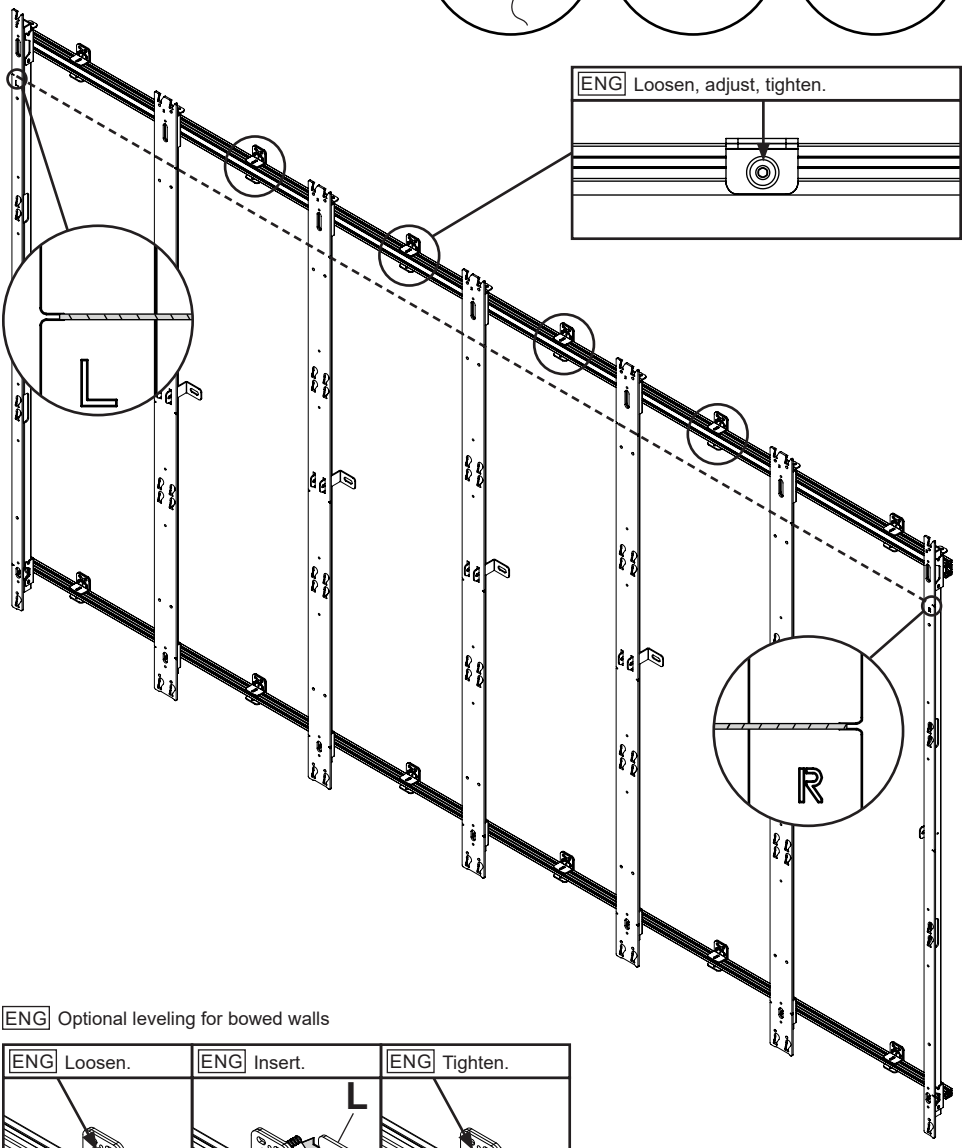

ENG Optional leveling for bowed walls

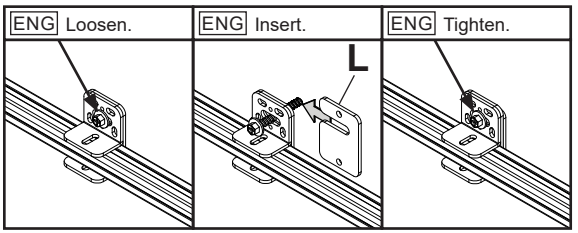

8-4

ENG Tie a string between bottom slots on outer columns in order to level the depth of each vertical column.

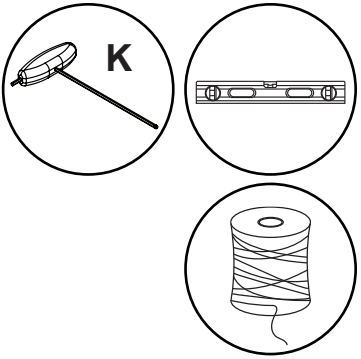

ENG Optional leveling for bowed walls

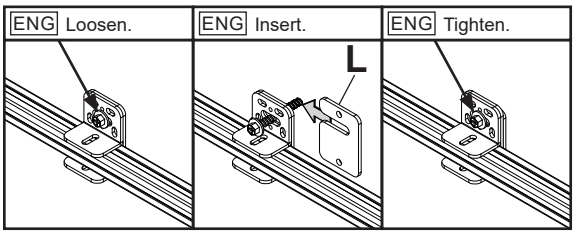

8-5

ENG With the string still attached, level the height of each column

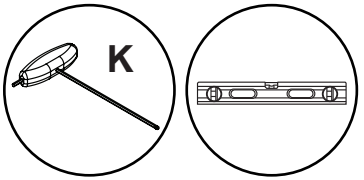

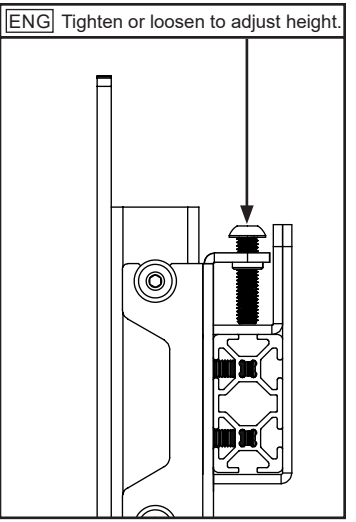

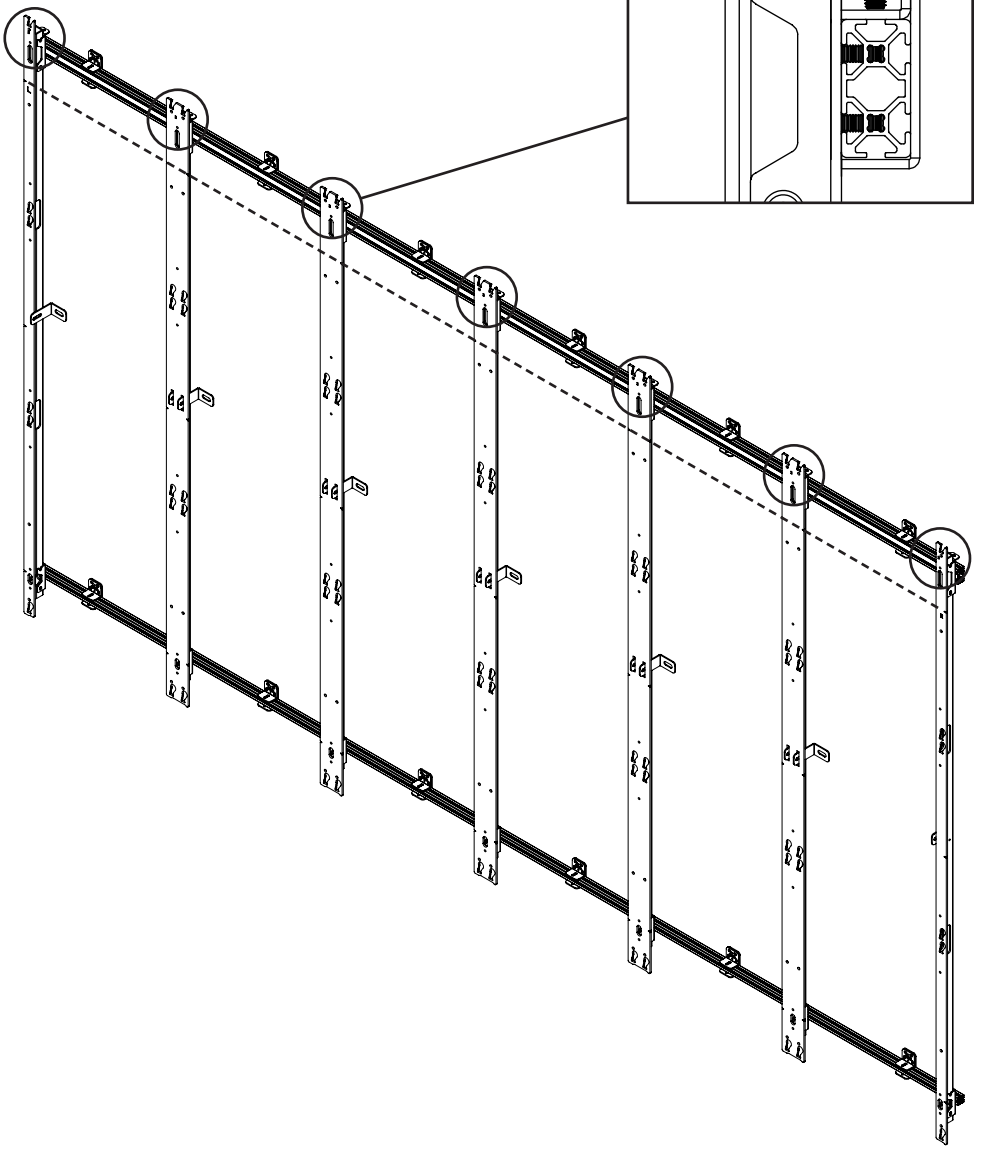

8-6

ENG Adjust inner columns to fit horizontal spacers. Tighten column hardware after spacing. Start from the left column.

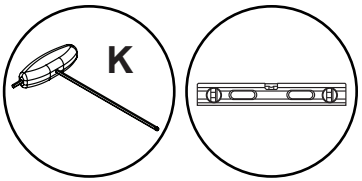

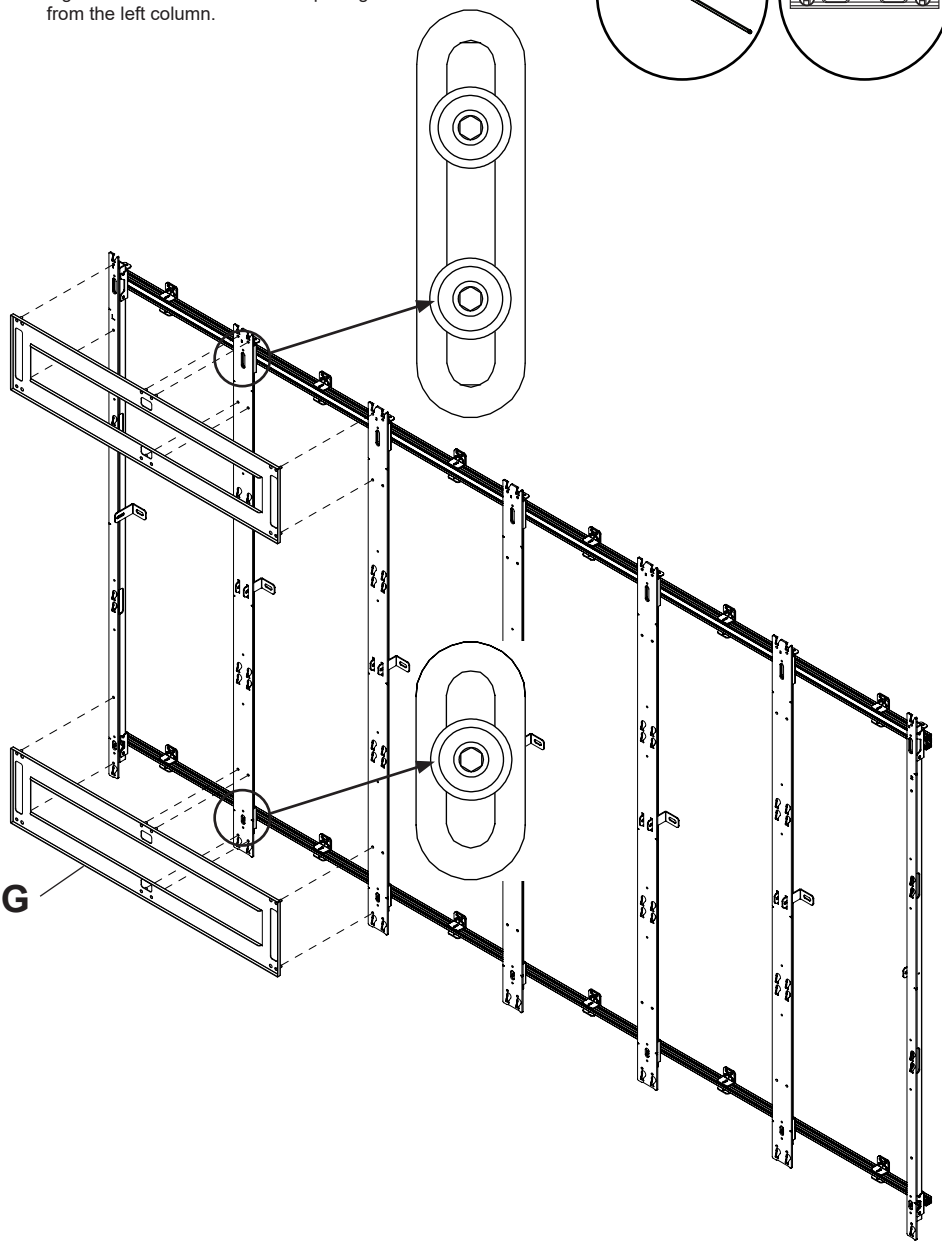

8-7

ENG Continue adjusting inner columns to fit horizontal spacers until all are level. Tighten column hardware after spacing

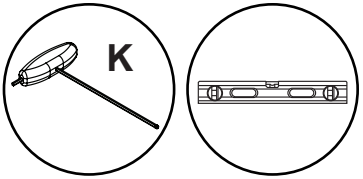

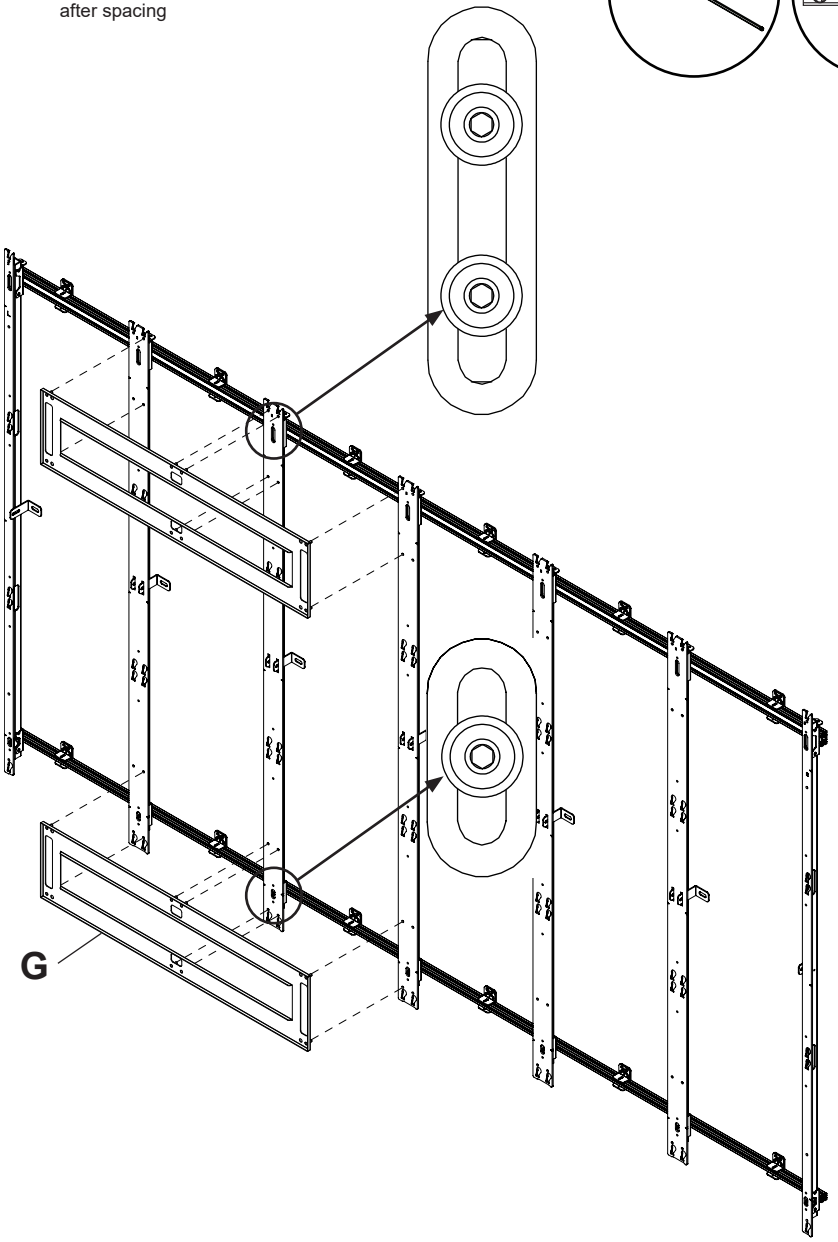

8-8

ENG Remove all spacers.

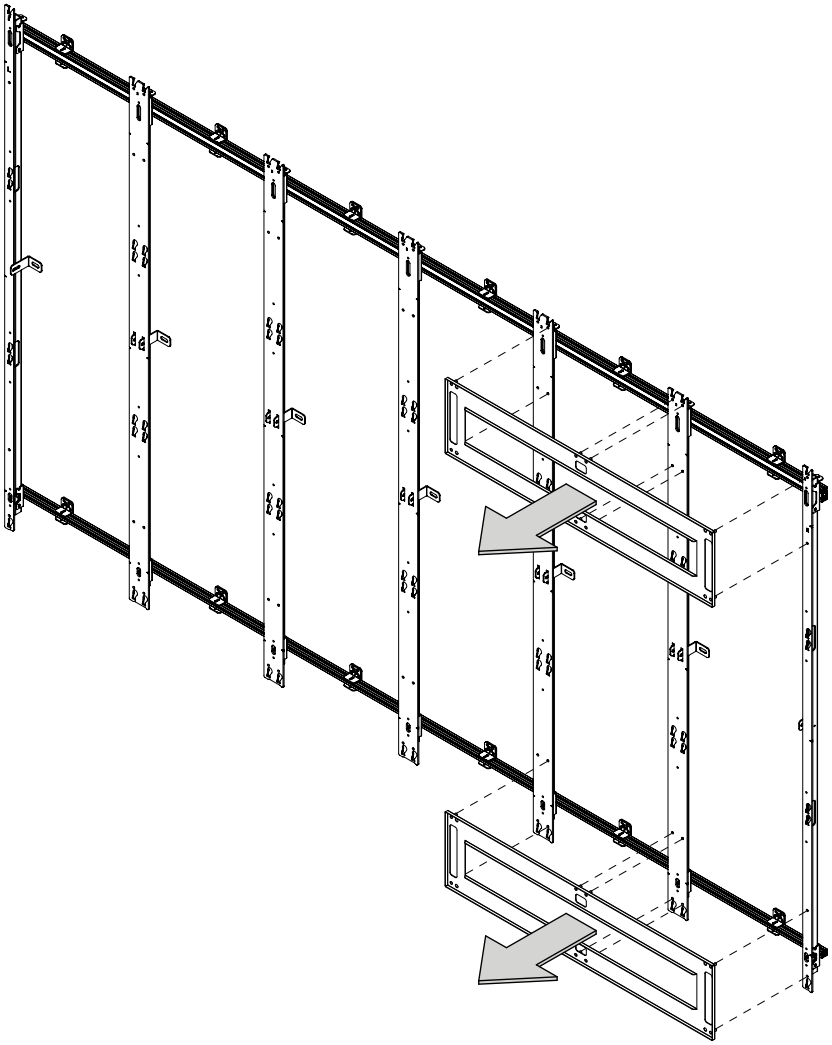

9-1

ENG Level L brackets and mark mounting holes on plywood (must be minimum Grade BC, 1/2" (13mm) thick.)

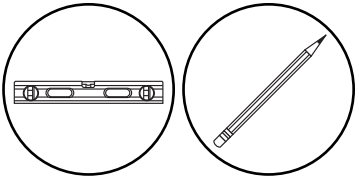

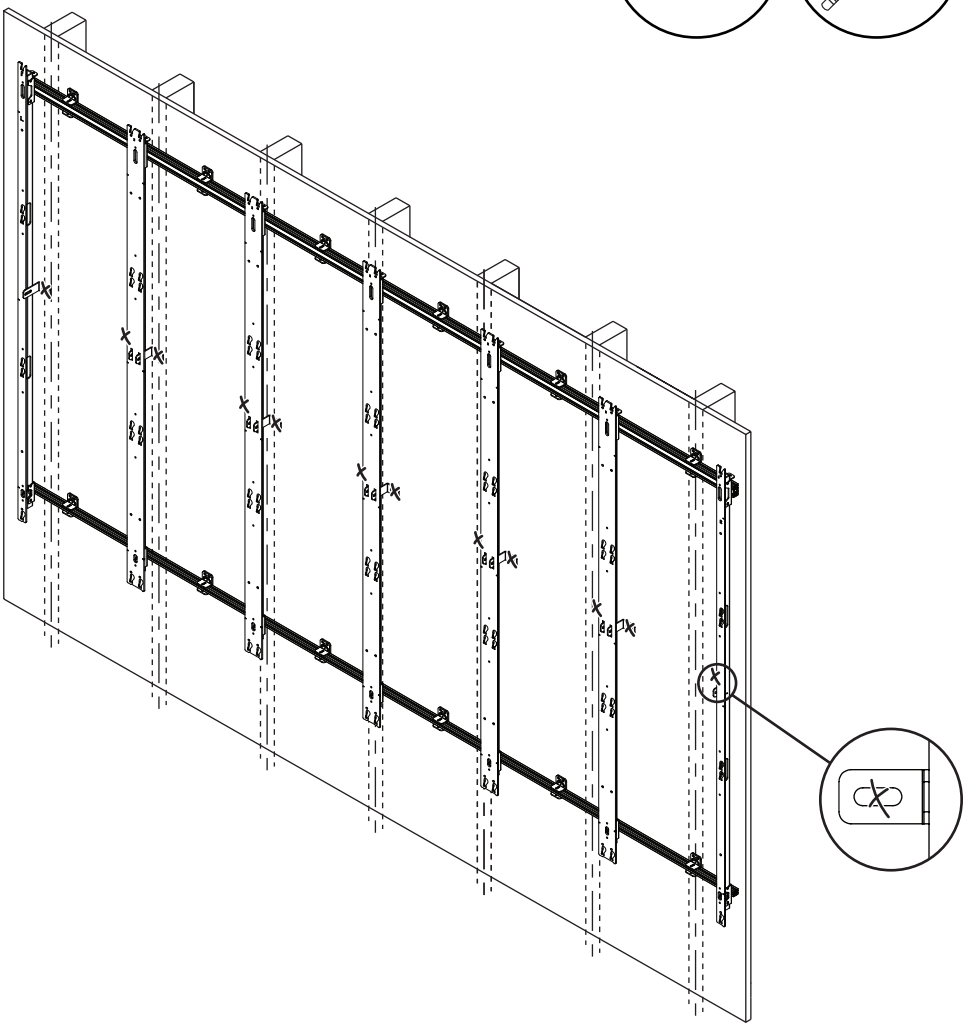

9-2

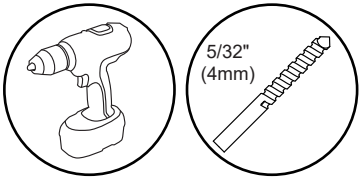

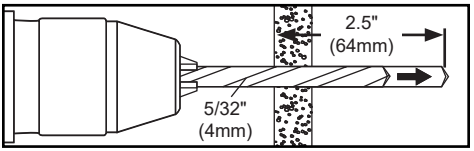

ENG Drill mounting holes into supporting surface (2.5" (64mm) minimum depth required).

9-3

ENG Level L brackets. Install using wood screws provided.

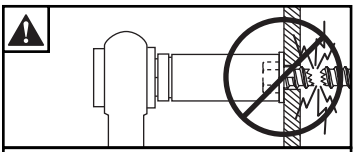

ENG Maximum 80 in. • lb (9 N.M.).

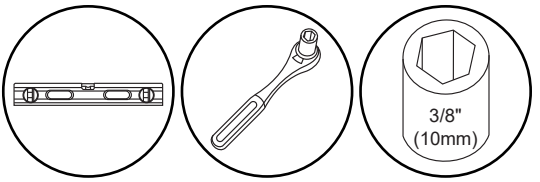

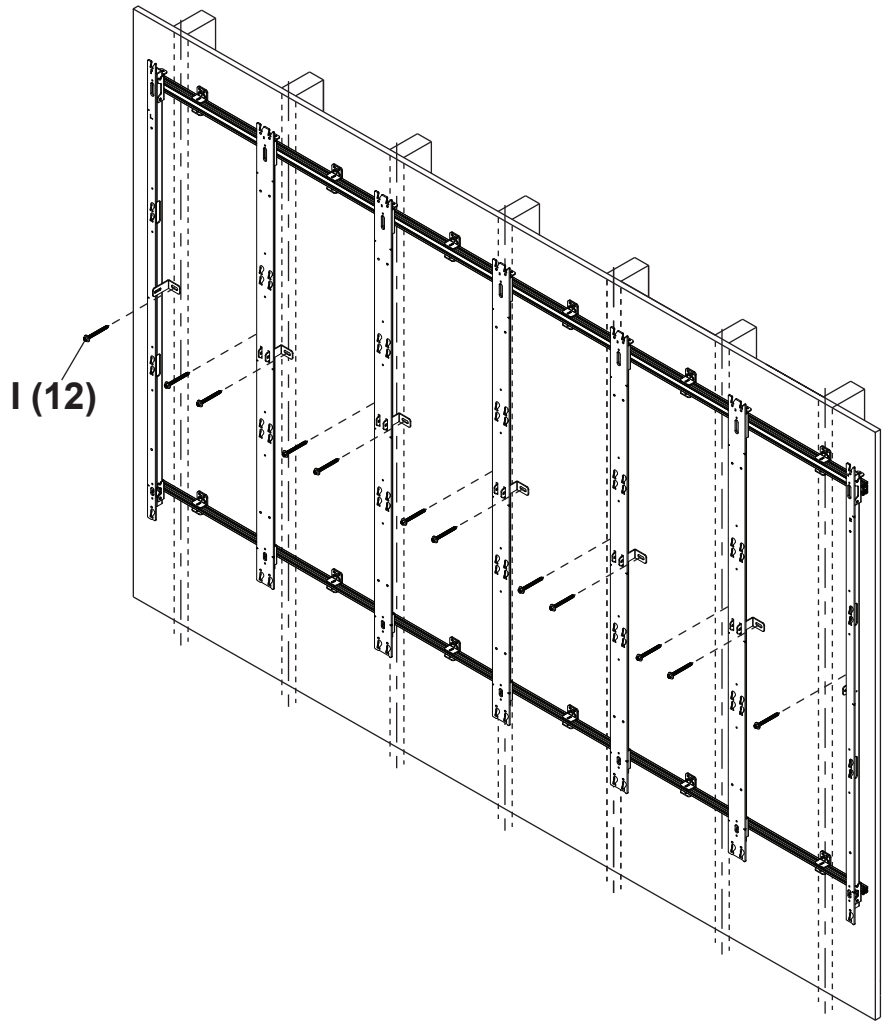

9-4

ENG Tie a string between center slots on outer column in order to level the depth of each vertical column.

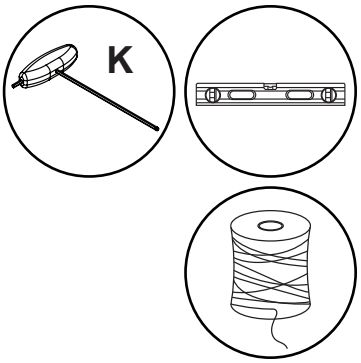

9-5

ENG Adjust depth, then remove string.

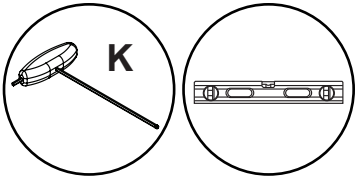

10-1

ENG Attach display, tighten connecting hardware, and run cables one at a time starting from the bottom left.

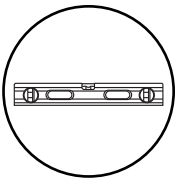

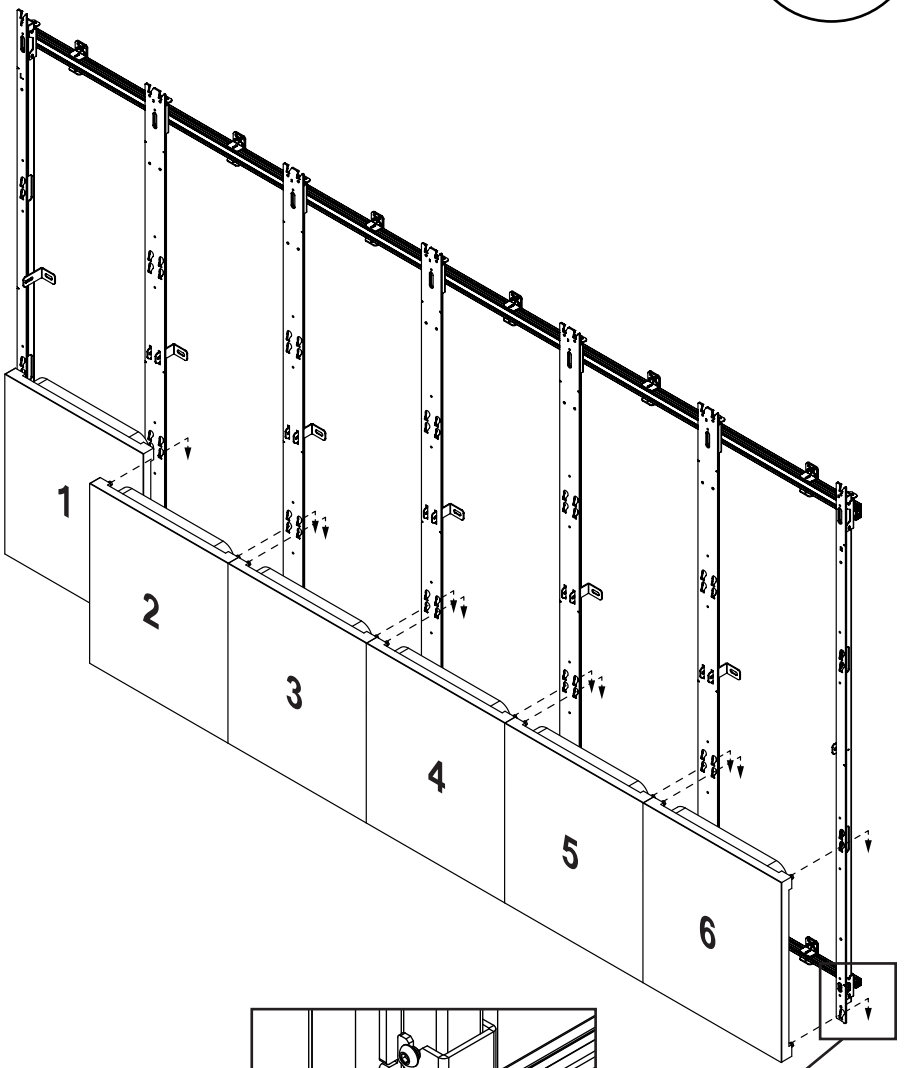

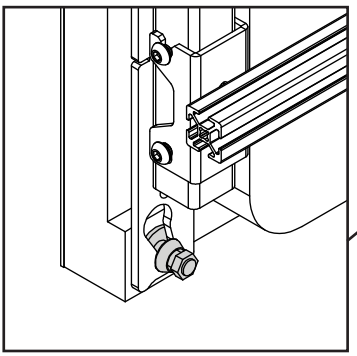

10-2

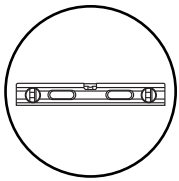

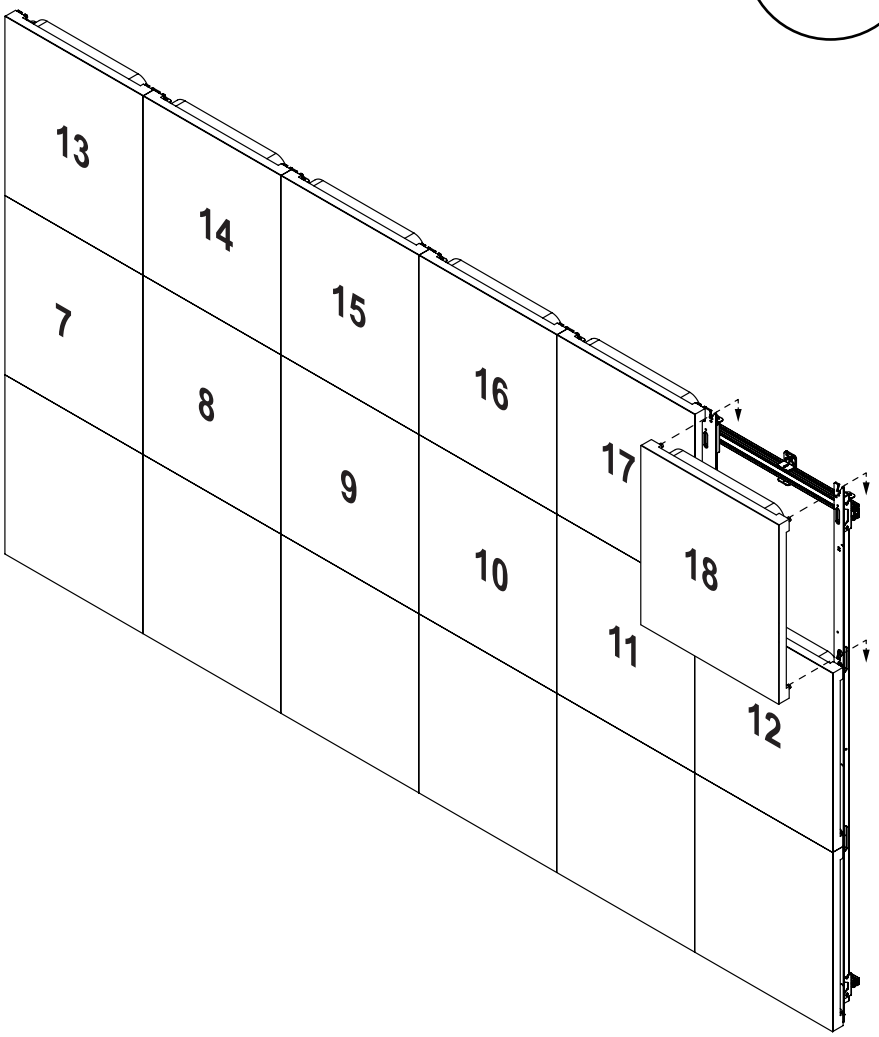

11

ENG To remove, start from the top right.

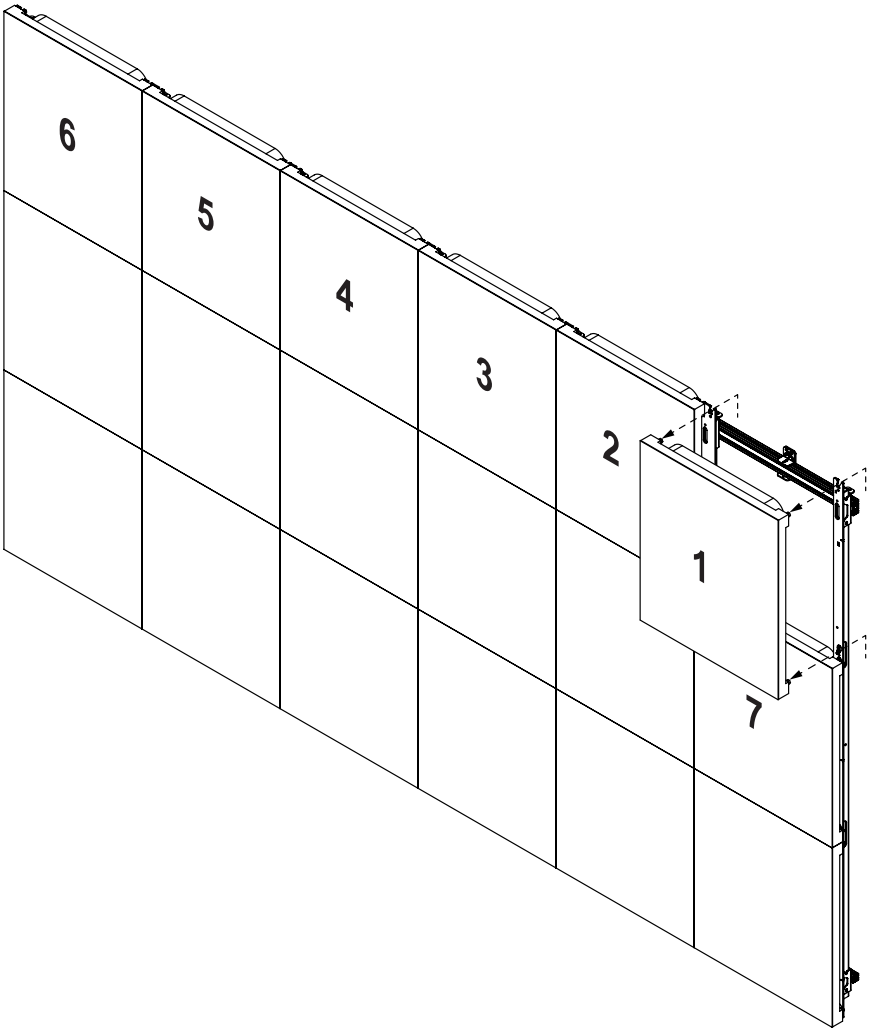

ENG This page intentionally left blank.

LIMITED FIVE-YEAR WARRANTY

Peerless Industries, Inc. (“Peerless-AV”) warrants to original end-users that each Peerless-AV® mounting product will be free from defects in material and workmanship, under normal use, for the applicable warranty period (from date of the original installation of the product). At its option, Peerless-AV will repair or replace, or refund the purchase price of, any product which fails to conform with this warranty.

Any implied warranty of merchantability or fitness for a particular purpose shall be limited to the period of the express warranty set forth below.

In no event shall Peerless-AV be liable for incidental or consequential damages, whether or not secured by a security device which may be included with the product.

Some states do not allow limitations on how long an implied warranty lasts, or the exclusion of incidental or consequential damages, so the above limitation and/or the above exclusion may not apply to you.

This warranty does not cover damage caused by incorrect selection, installation or the failure to follow Peerless-AV instructions or warnings when installing, using or storing the product.

This warranty gives specific legal rights, and you may also have other rights which vary from state to state. To make a warranty claim in North America, contact Peerless-AV customer care at 1-800-865-2112. See complete global warranty information for regions outside North America at www.peerless-av.com/en-uk/customer-care/warranties-returns.

peerless-AV®

Peerless-AV
2300 White Oak Circle
Aurora, IL 60502
Email: tech@peerlessmounts.com
Ph: (800) 865-2112
Fax: (800) 359-6500
www.peerless-av.com

© 2019, Peerless Industries, Inc.

Peerless-AV Europe
Unit 3 Watford Interchange,
Colonial Way, Watford, Herts,
WD24 4WP, United Kingdom
Customer Care
44 (0) 1923 200 100
www.peerless-av.com

© 2019, Peerless Industries, Inc.

Peerless-AV de Mexico
Ave de las Industrias 413
Parque Industrial Escobedo
Escobedo N.L Mexico 66062
Servicio al Cliente
01-800-849-65-77
www.peerless-av.com

© 2019, Peerless Industries, Inc.