www.trust.com/22560/faq

Trust



PC CASE

MID-TOWER
ATX

1.

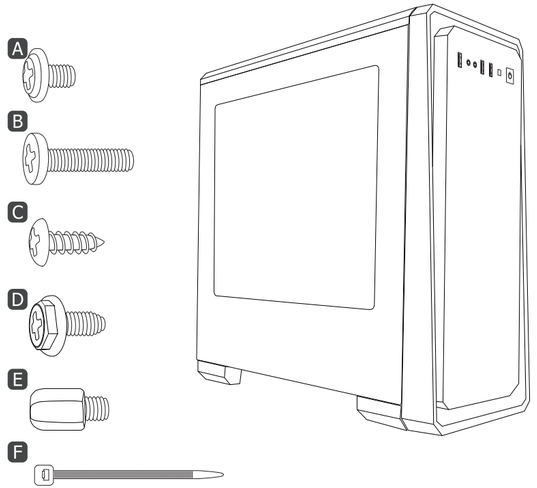

2.

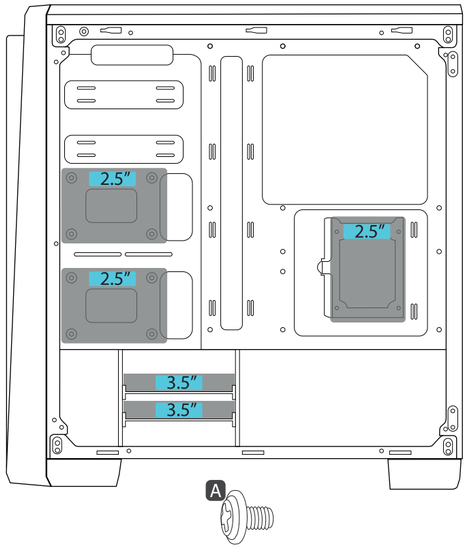

3.

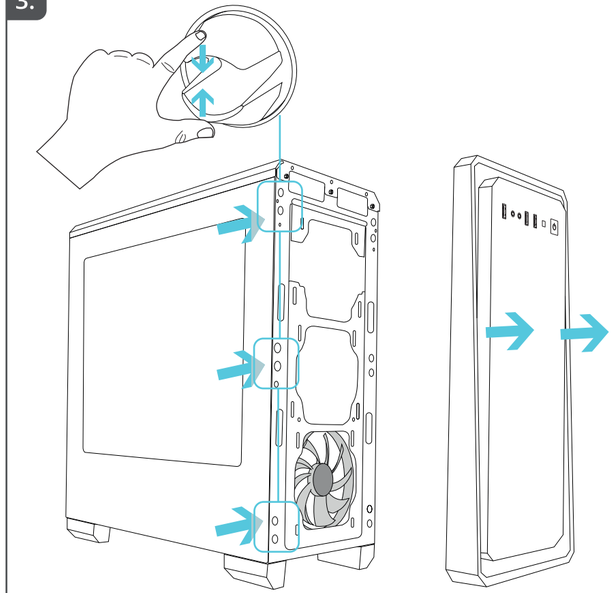

4.

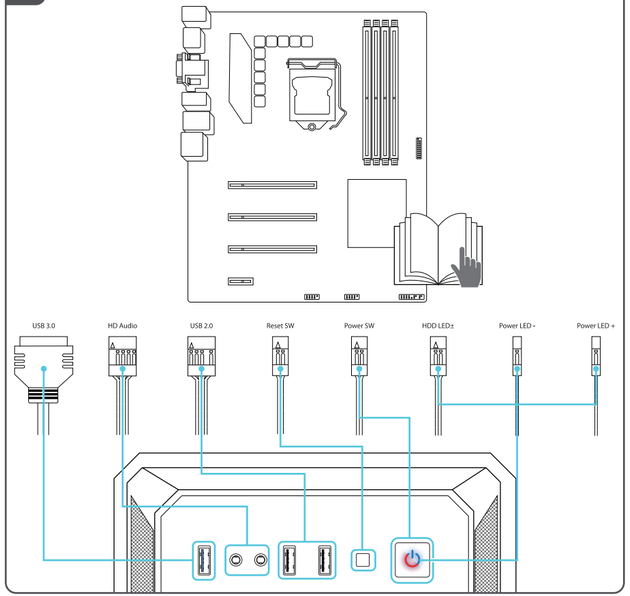
USB 3.0
HD Audio
USB 2.0
Reset SW
Power SW
HDD LED±
Power LED -
Power LED +

5.

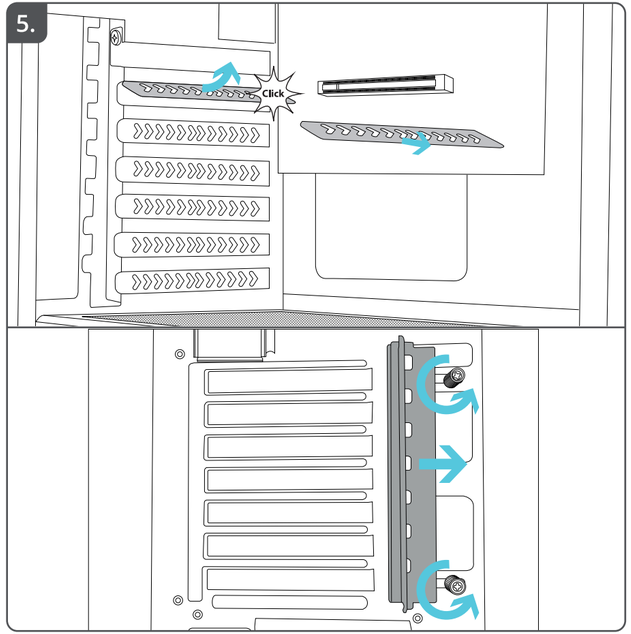
Click

6.

