AKZM 8660 IX

12NC: 852586601100

GTIN (EAN) code: 8003437832406



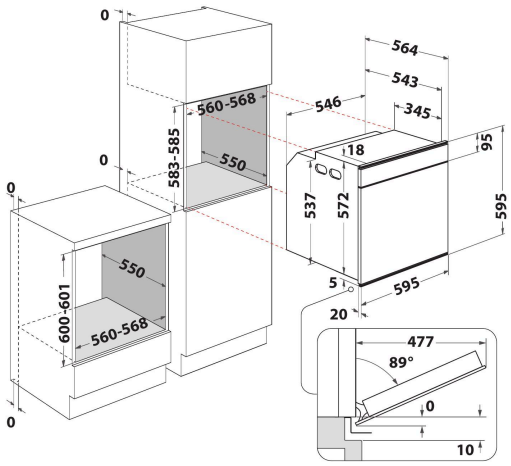

- 6TH Sense technology
- Pyrolytic cleaning system
- Energy class A+
- Cavity 73 L
- Cook3
- Ready2Cook
- Forced Air Fan Cooking
- Turbo Fan
- Grill
- Easy Clean Enamel Interior
- Turbo grill function
- Maxi cooking
- Pastry function
- Soft closing door
- Special functions
- Fast Pre-Heating
- Conventional Cooking

Whirlpool built in electric oven: inox color, self cleaning - AKZM 8660 IX

This Whirlpool built in Oven features: self cleaning technology, that uses a high-temperature cycle to burn food residues into ashes, which can then be easily wiped away with a sponge. Advanced electric technology allowing you to cook dishes saving energy. Halogen lamp allowing a more energy-efficient performance. Exclusive 6th SENSE technology, that allows you to pick among a variety of pre-programmed recipes, and your oven will automatically adjust cooking, temperature and time settings, to ensure perfect results. Innovative Cook3 function, that allows you to cook up to three separate dishes at the same time, without the risk of aromas mixing.

6th Sense Absolute

Three steps recipes. Always reach outstanding results. Thanks to the central knob, you can set your oven in three simple steps. Select one of the 6 pre-set recipes and your oven will automatically set the dedicated cooking function and propose the appropriate time and temperature range.

Ready2cook

No pre-heating required. The Ready2Cook function uses a powerful convection system to quickly reach the right temperature, and completely eliminate the need for pre-heating.

Cook3

No aroma mixing. With the innovative Cook3 function, you can cook up to three separate dishes at the same time, without the risk of aromas mixing.

Soft closing

Slow-motion closing. Thanks to slow-closing hinges, the oven door shuts effortlessly, with a soft and silent motion.

Urban aesthetic

The Urban collection. Admire the beauty of performance. With a futuristic design and unparalleled performance, the Urban collection is designed for modern, high-tech kitchens. Equipped with innovative 6TH SENSE technology, Urban ovens can be set in three simple steps for perfect results. Maximum flexibility and ease of use with a distinctive look and original finishes.

Cool Door/Gifam

The innovative Cool Safe Door design of this appliance provides extra piece of mind, even with children in the kitchen.

AKZM 8660 IX

12NC: 852586601100

GTIN (EAN) code: 8003437832406

Whirlpool
SENSING THE DIFFERENCE

MAIN FEATURES

Product group	Oven
Commercial code	AKZM 8660 IX
Main colour of product	Inox
Construction type	Built-in
Type of control	Mechanical and electronic
Type of control settings	-
Are any hobs controls integrated?	No
Which kind of hobs can be controlled?	-
Automatic programmes	Yes
Current (A)	16
Voltage (V)	220-240
Frequency (Hz)	50/60
Length of Electrical Supply Cord (cm)	90
Plug type	No
Depth with open door 90 degree (mm)	-
Height of the product	595
Width of the product	595
Depth of the product	564
Minimum niche height	0
Minimum niche width	0
Niche depth	0
Net weight (kg)	35.5
Usable volume (of cavity)	73
Integrated Cleaning system	Pyrolytic
Grids of the cavity	1
Trays	2

TECHNICAL FEATURES

Timer	-
Time control	Electronic
Time-setting options	Start and Stop
Safety device	-
Interior light	Yes
Number of interior lights of the cavity	1
Position of interior lights of the cavity	Rear
Oven guides of the cavity	Grids
Probe of the cavity	No

PERFORMANCES

Energy input	Electric
Type of energy of the cavity	Electricity
Energy efficiency class - NEW (2010/30/EU)	A+
Energy consumption per cycle conventional - NEW (2010/30/EU)	0.91
Energy consumption per cycle forced air convection - NEW (2010/30/EU)	0.7

