CyberPower®

User's Manual

Power Distribution Unit

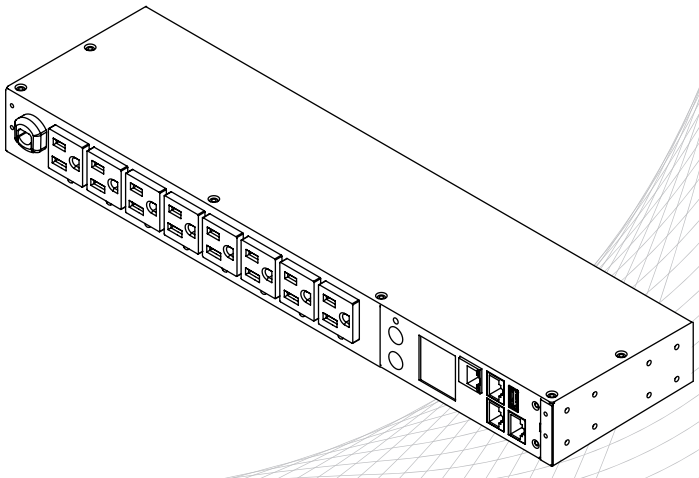

Table of Contents

Model List 1
Safety Precautions..... 1
Introduction 2
Package Contents 2
1U Models 2
2U Models 3
Proruct Features 4
1U 15A Models..... 4
Technical Specifications 4
1U 20A Series 5
Technical Specifications 5
2U Models..... 6
Technical Specifications 6
Installation Guide 7
Horizontal Installation 7
For 1U Model 7
For 2U Model 8
Vertical Installation 10
For 1U Model..... 10
Power Cord Locking-For IEC Type PDU 10
Input Power Cord..... 10
Output Power Cord..... 11
Electrical Installation..... 11
Network Installation..... 12
Operation..... 13
Remote Management..... 13
Local Management 13
LED Indicators..... 14
Environmental Monitoring (optional) 14
Device Reset..... 14
Unattended/Automatic Shutdown..... 14
Firmware Upgrade..... 15
Troubleshooting 16
Conformance Approvals 16
Customer Service & Warranty 17
Product Registration..... 17
CyberPower International 17
Limited Warranty 17
Appendix A-Hyper Terminal 18
Appendix B-Power Device Network Utility..... 18
Overview 18
Installation..... 18
Launch Program 20
Getting Started..... 20
Advanced Settings..... 21

Model List

Metered by Outlet Switched Series	Metered by Outlet Series	Switched Series	Monitored Series
1U			
PDU81001	PDU71001	PDU41001	PDU31001
PDU81002	PDU71002	PDU41002	PDU31002
PDU81004	PDU71004	PDU41004	PDU31004
PDU81005	PDU71005	PDU41005	PDU31005
PDU81006	PDU71006	PDU41006	PDU31006
2U			
PDU81003	PDU71003	PDU41003	PDU31003
PDU81007	PDU71007	PDU41007	PDU31007
PDU81008	PDU71008	PDU41008	PDU31008
PDU81009	PDU71009	PDU41009	PDU31009

Safety Precautions

Read the following before installing or operating the Power Distribution Units (PDU):

- Use only the supplied hardware to attach the mounting brackets.
- The PDU must be plugged into a three-wire, grounded outlet on a circuit that is protected by a fuse or circuit breaker. For PDUx1001/x1004 series, please use a 15A circuit protector. For PDUx1002/x1005/x1006 series, please use a 20A circuit protector. For PDUx1003/x1007/x1008/x1009 series, please use a 30A circuit protector. Connection to any other type of power outlet may result in a shock hazard.
- Do not use extension cords or adapters with this PDU.
- Never install a PDU or associated wiring or equipment during a lightning storm.
- Ensure that the power cord, plug, and socket are in good condition.



To prevent the risk of fire or electrocution, this PDU should be installed in a temperature and humidity controlled indoor area free of conductive contaminants. Do not install this PDU where excessive moisture or heat is present.

©2016 Cyber Power Systems, Inc. All rights reserved.

Introduction

Package Contents

1U Models

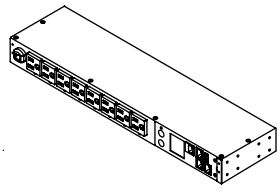

PDU

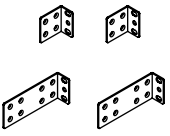

Mounting Brackets:
2 short & 2 long



12 (Flat Head M4 x 8)
Bracket Mounting Screws



6 (M5 x 12) Rack Mounting
Screws/Washers

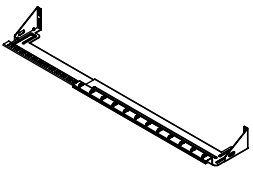

Cord Retention Tray



6 (M3 x 6)
Cord Retention Tray
Mounting Screws



Cable Ties:
Qty: 12 (NEMA outlet PDU)
Qty: 27 (IEC outlet PDU)

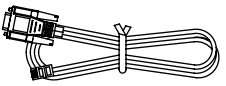

RJ45/DB9 Serial Port
Connection Cable



User's Manual

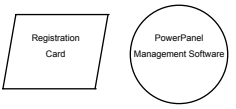

Registration & Software Download Cards

The items below are only included with certain models

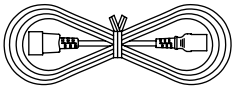

Power Cord 10ft IEC-320 C13/14
(PDU81004/ PDU71004/
PDU41004/ PDU31004)

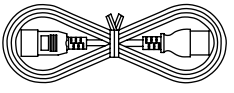

Power Cord 10ft IEC-320 C19/20
(PDU81005/ PDU71005/
PDU41005/ PDU31005)

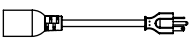

Adapter NEMA L5-20R to 5-20P
(PDU81002/ PDU71002/
PDU41002/ PDU31002)

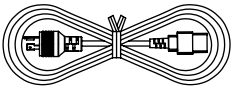

Power Cord 10ft
IEC-320 C19 to NEMA L6-20P
(PDU81006/ PDU71006/
PDU41006/ PDU31006)

©2016 Cyber Power Systems, Inc. All rights reserved.

Introduction

Package Contents

2U Models

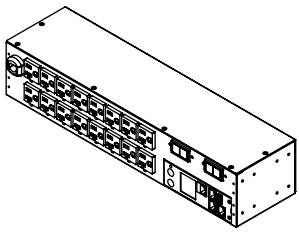

PDU

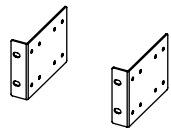

Mounting Brackets x 2



12 (Flat Head M4 x 8)
Bracket Mounting Screws



6 (M5 x 12) Rack Mounting
Screws/Washers

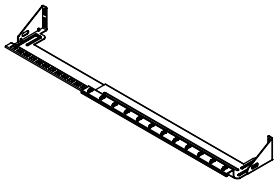

Cord Retention Tray x 2



12 (M3 x 6)
Cord Retention Tray
Mounting Screws



Cable Ties:
Qty: 24 (NEMA outlet PDU)
Qty: 30 (10 IEC outlet PDU)
Qty: 48 (16 IEC outlet PDU)

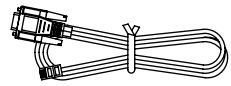

RJ45/DB9 Serial Port
Connection Cable



User's Manual

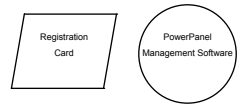

Registration & Software Download Cards

Check

Before using, please check to ensure the package contains all the items shown above. If there are missing parts, please contact your local CyberPower technical support team for assistance.

©2016 Cyber Power Systems, Inc. All rights reserved.

Product Features (1U 15A Models)

Front Panel Description

NEMA Type

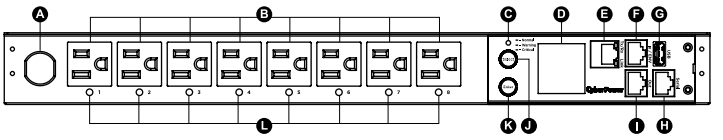

IEC Type

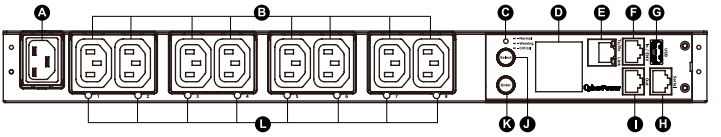

A. AC Inlet/ AC Power Cord - Used to connect PDU to utility power or UPS.
B. AC Output Receptacles - Provides power for connected equipment.
C. Status Indicator - Indicates the condition of the PDU (eg. load or environment status).
D. Multifunction LCD Readout - Displays various PDU information such as power and load condition.
E. Ethernet Port – Used to connect PDU to the network.
F. ENVIROSENSOR/ Daisy Chain (In) Port (RJ45 modular port) – Used for ENVIROSENSOR or chaining to previous PDU (future use).
G. USB Port - Used to upgrade the firmware via a flash drive.
H. Serial Port (RJ45 modular port) - Used to connect to a PC and control the PDU locally via SSH/Telnet.
I. Daisy Chain (Out) Port – Used for chaining to next PDU (future use).
J. Select Button - Used to control the LCD screen and toggle through the available information options.
K. Enter Button - Used to choose selected items, enter to next level menu or return to previous menu.
L. Outlet Indicator (switched series only) – Indicates if the outlet is providing power to connected equipment.

Rear Panel Description

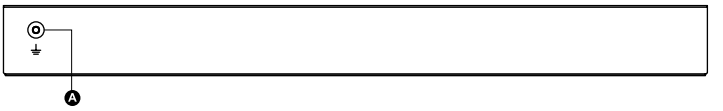

A. Ground Stud - Use to ground the PDU.

Technical Specifications

Model Name	PDU81001 PDU71001 PDU41001 PDU31001	PDU81004 PDU71004 PDU41004 PDU31004
Input		
Nominal Voltage	100-120V	100-240V
Frequency	50/60Hz	
Maximum Input Current	12A UL (Derated)	10A CE/ 12A UL (Derated)
Plug Type	NEMA 5-15P	IEC-320 C14
Power Cord Type	SR (14 AWG)	Socket
Power Cord Length	12 ft/3.65 m	10 ft/3.05 m
Output		
Nominal Voltage	100-120V	100-240V
Maximum Output Current	12A UL (Derated)	10A CE/ 12A UL (Derated)
Outlet Type	NEMA 5-15R	IEC-320 C13
Outlet Number	8	
Management and Communications		
Multifunction LCD Readout	Voltage, Frequency, Load, Current, HW/FW Version, Network Information	
Software	PowerPanel® Business Edition	
Networking	Yes	
Serial Port	RJ45	
Sensor Capable	Optional	
Physical		
Dimensions (H x W x D)	1.75" x 17.05" x 4.41"/ 44mm x 433mm x 112mm	
Environmental		
Humidity	0 to 95% Non-condensing	
Altitude	11480 ft/3500 m	
Temperature	32°F to 131°F /0°C to 55°C	
Safety Approvals		
Certifications	UL 60950-1, FCC Class A	UL 60950-1, CE, FCC Class A

* All specifications are subject to change without notice.

©2016 Cyber Power Systems, Inc. All rights reserved.

Product Features (1U 20A Models)

Front Panel Description

NEMA Type

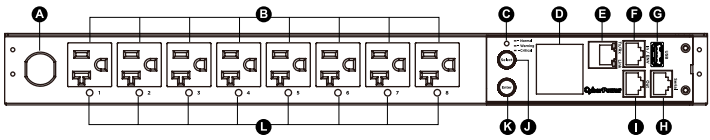

IEC Type

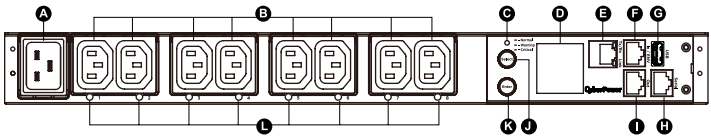

A. AC Inlet/ AC Power Cord - Used to connect PDU to utility power or UPS.
B. AC Output Receptacles - Provides power for connected equipment.
C. Status Indicator - Indicates the condition of the PDU (eg. load or environment status).
D. Multifunction LCD Readout - Displays various PDU information such as power and load condition.
E. Ethernet Port – Used to connect PDU to the network.
F. ENVIROSENSOR/ Daisy Chain (In) Port (RJ45 modular port) – Used for ENVIROSENSOR or chaining to previous PDU (future use).
G. USB Port - Used to upgrade the firmware via a flash drive.
H. Serial Port (RJ45 modular port) - Used to connect to a PC and control the PDU locally via SSH/Telnet.
I. Daisy Chain (Out) Port – Used for chaining to next PDU (future use).
J. Select Button - Used to control the LCD screen and toggle through the available information options.
K. Enter Button - Used to choose selected items, enter to next level menu or return to previous menu.
L. Outlet Indicator (switched series only) – Indicates if the outlet is providing power to connected equipment.

Rear Panel Description

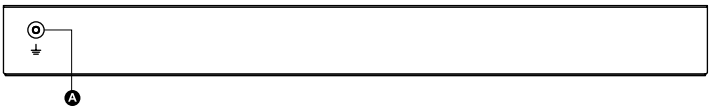

A. Ground Stud - Use to ground the PDU.

Technical Specifications

Model Name	PDU81002 PDU71002 PDU41002 PDU31002	PDU81005 PDU71005 PDU41005 PDU31005	PDU81006 PDU71006 PDU41006 PDU31006
Input			
Nominal Voltage	100-120V	100-240V	200-240V
Frequency	50/60Hz		
Maximum Input Current	16A CE, UL (Derated)		
Plug Type	NEMA (L) 5-20P (Adapter)	IEC-320 C20	NEMA L6-20P
Power Cord Type	SR (12 AWG)	Socket	SR (12 AWG)
Power Cord Length	12 ft/3.65 m	10 ft/3.05 m	12 ft/3.65 m
Output			
Nominal Voltage	100-120V	100-240V	200-240V
Maximum Output Current	16A CE, UL (Derated)		
Outlet Type	NEMA 5-20R	IEC C13	
Outlet Number	8		
Management and Communications			
Multifunction LCD Readout	Voltage, Frequency, Load, Current, HW/FW Version, Network Information		
Software	PowerPanel® Business Edition		
Networking	Yes		
Serial Port	RJ45		
Sensor Capable	Optional		
Physical			
Dimensions (H x W x D)	1.75" x 17.05" x 4.41"/ 44mm x 433mm x 112mm		
Environmental			
Humidity	0 to 95% Non-condensing		
Altitude	11480 ft/3500 m		
Temperature	32°F to 131°F /0°C to 55°C		
Safety Approvals			
Certifications	UL 60950-1, FCC Class A	UL 60950-1, CE, FCC Class A	UL 60950-1, FCC Class A

* All specifications are subject to change without notice.

©2016 Cyber Power Systems, Inc. All rights reserved.

Product Features (2U Models)

Front Panel Description

NEMA Type

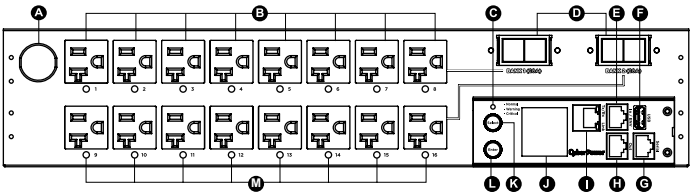

IEC Type

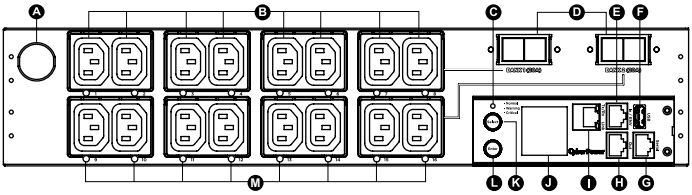

A. AC Inlet/ AC Power Cord - Used to connect PDU to utility power or UPS.
B. AC Output Receptacles - Provides power for connected equipment.
C. Status Indicator - Indicates the condition of the PDU (eg. load or environment status).
D. Circuit Breaker – Provides overload protection.
E. ENVIROSENSOR/ Daisy Chain (In) Port (RJ45 modular port) – Used for ENVIROSENSOR or chaining to previous PDU (future use).
F. USB Port - Used to upgrade the firmware via a flash drive.
G. Serial Port (RJ45 modular port) - Used to connect to a PC and control the PDU locally via SSH/Telnet.
H. Daisy Chain (Out) Port – Used for chaining to next PDU (future use).
I. Ethernet Port – Used to connect PDU to the network.
J. Multifunction LCD Readout - Displays various PDU information such as power and load condition.
K. Select Button - Used to control the LCD screen and toggle through the available information options.
L. Enter Button - Used to choose selected items, enter to next level menu or return to previous menu.
M. Outlet Indicator (switched series only) – Indicates if the outlet is providing power to connected equipment.

Rear Panel Description

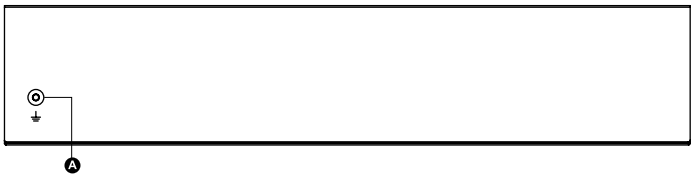

A. Ground Stud - Use to ground the PDU.

Technical Specifications

Model Name	PDU81003 PDU71003 PDU41003 PDU31003	PDU81007 PDU71007 PDU41007 PDU31007	PDU81008 PDU71008 PDU41008 PDU31008	PDU81009 PDU71009 PDU41009 PDU31009
Input				
Nominal Voltage	100-120V	200-240V		
Frequency	50/60Hz			
Maximum Input Current	24A UL (Derated)			
Plug Type	NEMA L5-30P	NEMA L6-30P		
Power Cord Type	SR (10 AWG)			
Power Cord Length	12 ft/3.65 m			
Output				
Nominal Voltage	100-120V	200-240V		
Maximum Output Current	24A UL (Derated)			
Maximum Output Current	20A (per bank)			
Band Number	2			
Outlet Type	NEMA 5-20R	IEC C13	12 IEC C13/ 4 IEC C19	IEC C19
Outlet Number	16			10
Circuit Breaker	Yes			
Management and Communications				
Multifunction LCD Readout	Voltage, Frequency, Load, Current, HW/FW Version, Network Information			
Software	PowerPanel® Business Edition			
Networking	Yes			
Serial Port	RJ45			
Sensor Capable	Optional			
Physical				
Dimensions (H x W x D)	3.5" x 17.05" x 4.41"/ 88mm x 433mm x 112mm			
Environmental				
Humidity	0 to 95% Non-condensing			
Altitude	11480 ft/3500 m			
Temperature	32°F to 113°F /0°C to 45°C			
Safety Approvals				
Certifications	UL 60950-1, FCC Class A			

* All specifications are subject to change without notice.

©2016 Cyber Power Systems, Inc. All rights reserved.

Installation Guide

CAUTION!! Please use only the provided screws through the entire installation process.

Horizontal Installation

For 1U Model

Step 1. Mounting Bracket Installation

Use the provided Mounting Bracket Screws (8) to attach the SHORT Mounting Brackets (2) to the PDU.

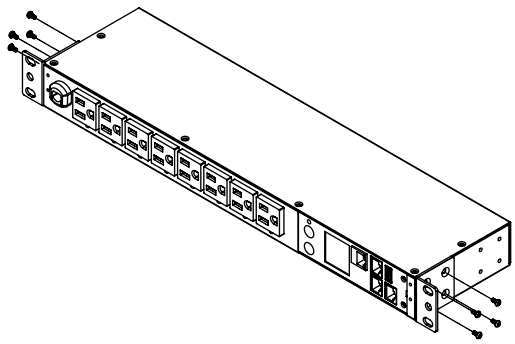

If you plan on attaching the Cord Retention Tray to the PDU, you will need to use the LONG Mounting Brackets (2).

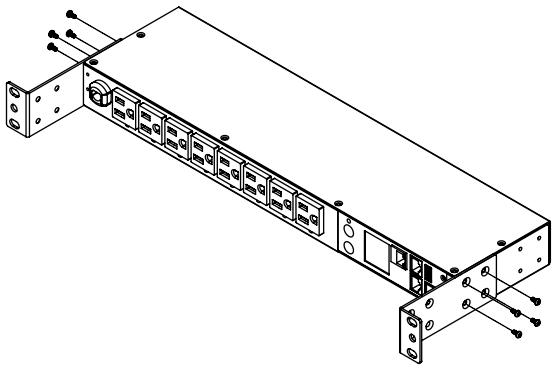

Step 2. PDU Mounting

Use the supplied Washers (4) and Screws (4) to secure the PDU to your existing rack system.

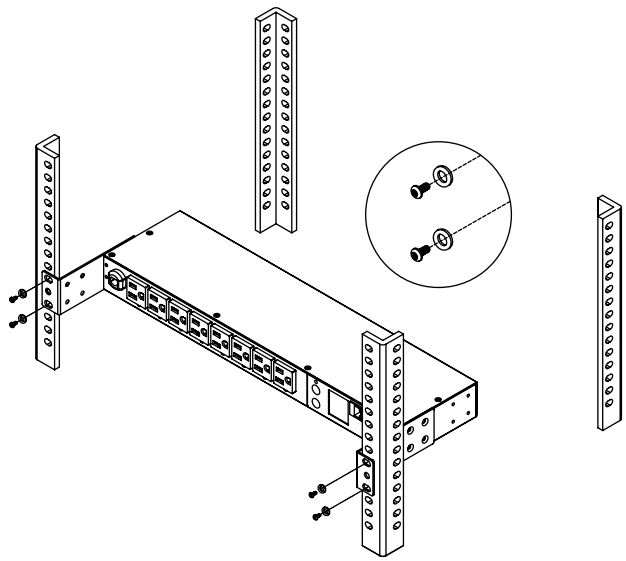

©2016 Cyber Power Systems, Inc. All rights reserved.

Step 3. Cord Retention Tray Installation (optional)

Attach the Cord Retention Tray to the PDU with the 4 supplied Cord Retention Tray Mounting Screws. Tighten the Cord Retention Tray with the screw on it.

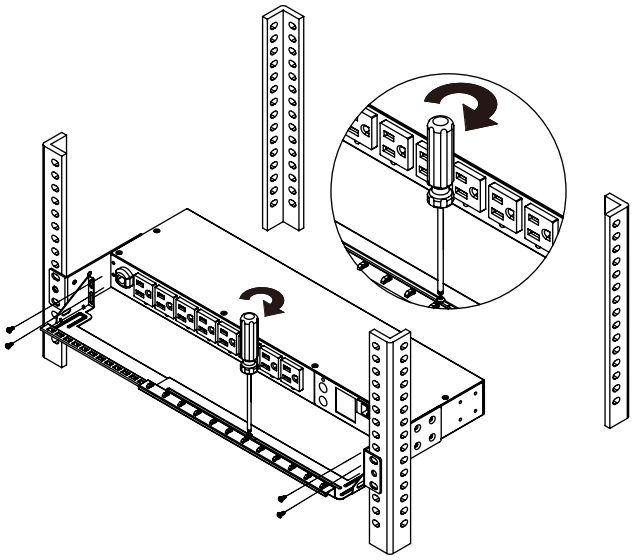

Use the provided Cable Ties to fasten each cord to the Cord Retention Tray.

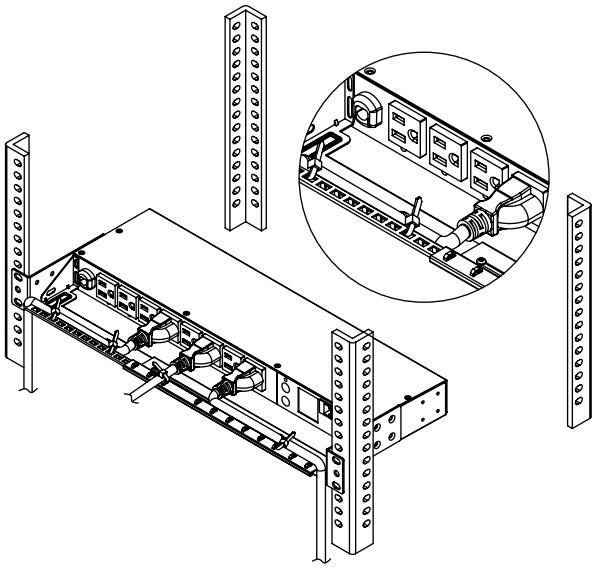

For 2U Model

Step 1. Mounting Bracket Installation

Use the provided Mounting Bracket Screws (8) to attach the Mounting Brackets (2) to the PDU.

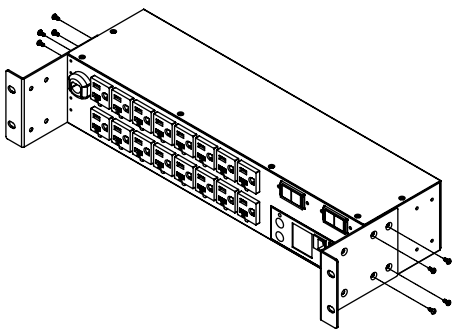

©2016 Cyber Power Systems, Inc. All rights reserved.

Step 2. PDU Mounting

Use the supplied Washers (4) and Screws (4) to secure the PDU to your existing rack system

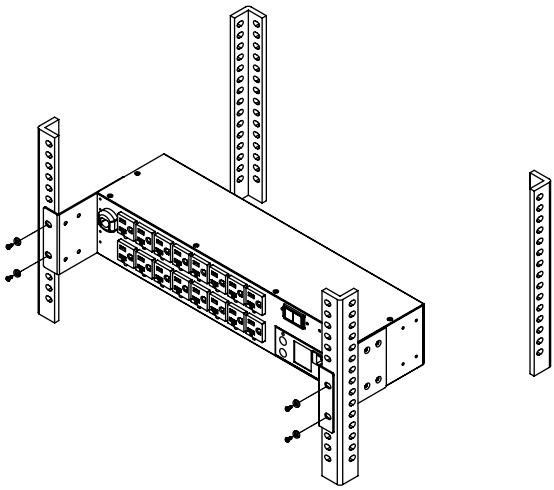

Step 3. Cord Retention Tray Installation (optional)

Attach the Cord Retention Tray to the PDU with the 8 supplied Cord Retention Tray Mounting Screws. Tighten the Cord Retention Tray with the screw on it.

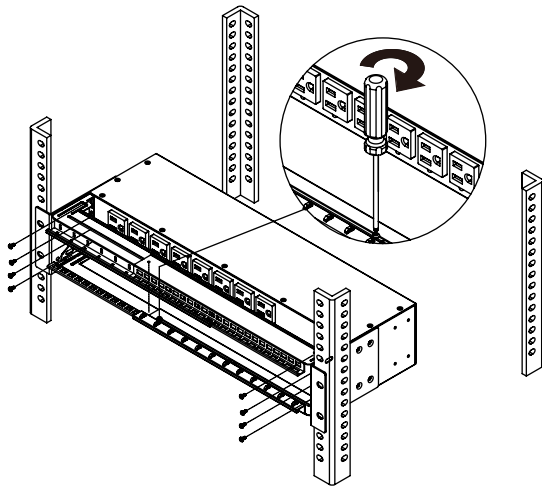

Use the provided Cable Ties to fasten each cord to the Cord Retention Tray.

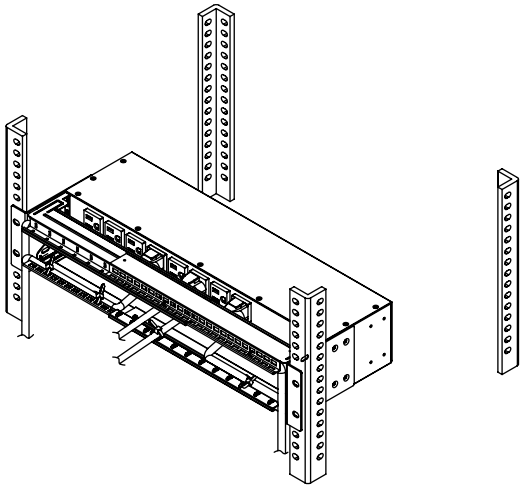

©2016 Cyber Power Systems, Inc. All rights reserved.

Vertical Installation

For 1U Model

Step 1. Mounting Bracket Installation

Use the provided Mounting Bracket Screws (8) to attach the SHORT Mounting Brackets (2) to the PDU.

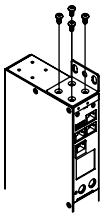

Step 2. PDU Mounting

Use the supplied Washers (2) and Screws (2) to secure the PDU to your existing rack system.

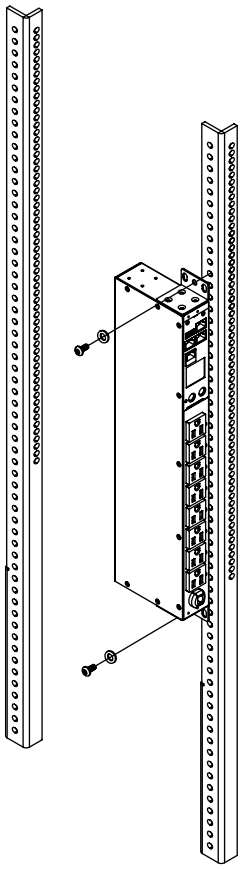

Power Cord Locking - For IEC Type PDU

Input Power Cord

Step 1. Align and insert the Cable Tie from the upper side of the Fixed Stand and fasten it as shown below.

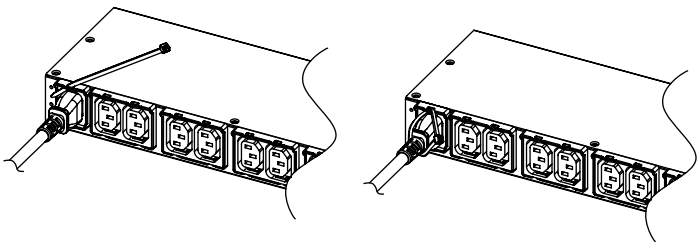

©2016 Cyber Power Systems, Inc. All rights reserved.

Installation Guide

Step 2. Align and insert the Cable Tie from the bottom side of the Fixed Stand and fasten it as shown below.

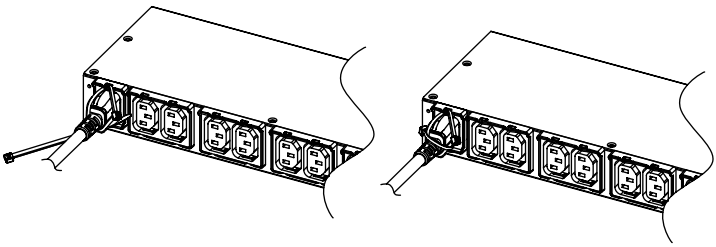

Output Power Cord

Step 1. Align and insert the Cable Tie from the upper side of the Fixed Stand and fasten it as shown below.

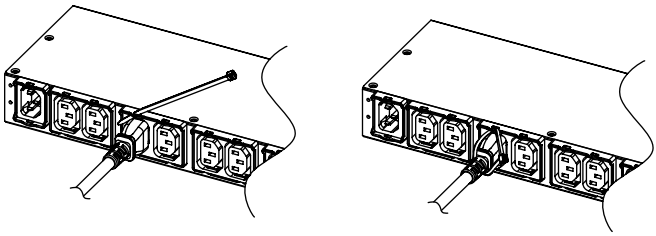

Electrical Installation

Step 1. Receptacle evaluation

Ensure that the plug type of your PDU unit matches the wall receptacle type that you are using.

CAUTION!!

The PDU must be plugged into a three-wire, grounded wall receptacle only. The wall receptacle must also be connected to an appropriate branch circuit/main with fuse or circuit breaker protection. Connection to any other type of wall receptacle may result in a shock hazard.

Step 2. Plug the PDU into the wall receptacle.

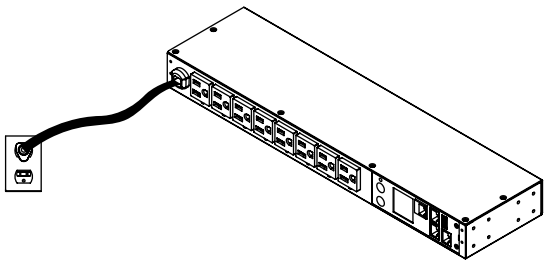

Step 3. Attach equipment

It is extremely important not to exceed the PDUs maximum current load (as outlined in the Specifications section). In order to determine your total load, simply use the LCD display on the front of the PDU to monitor the load being attached.

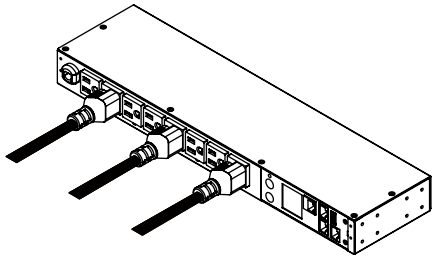

©2016 Cyber Power Systems, Inc. All rights reserved.

Network Installation

Step 1 – Attach the LAN Cable

Using an Ethernet cable, attach one end to the Ethernet port on the front of the PDU, and the other end to a network port.

Step 2 – Establish the PDU IP address

Assigning an IP address to the CyberPower PDU requires the user to have an available IP address that is valid on the respective network. If an available IP address is unknown, contact the network administrator to obtain one.

The default IP is 192.168.20.177 and the default DHCP function is on.

There are multiple methods for setting up the IP address on the PDU. Please follow the instructions below for the method that is appropriate for your application. Please make sure the PDU is powered on during this process.

Option 1 (recommended): Power Device Network Utility

1. Download the Power Device Network Utility software.
2. Highlight the PDU device from the list and select Tools > Device Setup from the menu.
3. Configure the IP Address, Subnet Mask, and Gateway Address to match your network settings.
4. Enter the user name and password of the PDU device at the Authentication menu.

Note: The default username is "**admin/cyber**" and the default password is "**admin/cyber**".

Option 2: DHCP Server

1. Ask your administrator if there is DHCP server on the LAN.
2. Make sure the DHCP is Enabled.
3. Make sure the network connection is ready and power on the PDU.
4. The PDU will obtain an IP address from the DHCP server automatically.

Option 3: Address Resolution Protocol (ARP) Command

1. Obtain the MAC address from the sticker on the PDU.
2. Open a command prompt as an administrator and type the following:
   "arp -s [available IP address] [MAC address of PDU]".
   Example: arp -s 192.168.20.240 00-0c-15-80-00-01
   IP Address MAC Address
3. Use the Ping command to assign a size of 123 bytes to the IP.
   * Type in "ping 192.168.20.240 -l 123" then press Enter
   * If the replies are received, your computer can communicate with the IP address

Option 4: Hyper Terminal or Terminal Emulator

In order for Hyper Terminal to interface with the PDU, the PC/server must be connected directly to the PDU via the serial port.

1. Use the included RJ45/DB9 serial port connection cable, attach one end to the serial port on the front of the PDU, and the other end to the PC/ server.
2. Open the Hyper Terminal software on your PC and select a name and icon for the connection.
3. Setup the COM port settings using the following values.
   * Bits per second: 9600
   * Data bits: 8
   * Parity: None
   * Stop bits: 1
   * Flow control: None
4. Type "setup" and press Enter to enter the Authentication menu.
5. Enter the user name and password of the PDU device at the Authentication menu.

Note: The default username is "**admin/cyber**" and the default password is "**admin/cyber**".

For further information and configuration via Hyper Terminal, see Appendix A- Hyper Terminal.

©2016 Cyber Power Systems, Inc. All rights reserved.

Operation

Remote Management

The remote management function provides monitoring of the MBO PDU operational information, controlling outlets and utilizing SNMP functionality.

Web

Remote management can be performed via web interface. To access the web interface, please follow the instructions below:

1. Enter the IP address of the PDU into a web browser (Internet Explorer, Firefox).
2. Enter the user name and password of the PDU device at the authentication screen.

Note: The default username is "**admin/cyber**" and the default password is "**admin/cyber**".

Telnet and SSH

The CyberPower PDU provides Telnet and Secure Shell (SSH) as Remote Management methods. Telnet uses user name and password as basic security while SSH has a higher security level with encryption of the transmitted packets including user name, password, and data. Configure the Setting of Telnet and SSH on the Web Interface. The default user name and password is **admin/cyber**; **admin/cyber**.

SNMP

The CyberPower PDU supports SNMPv1 and SNMPv3 Remote Management protocols. Download the CyberPower MIB file and add it to an SNMP-supporting management software. Default read/write community is **public/private** for SNMPv1. SNMPv3 provides a higher security level than SNMPv1 by encrypting the transmitted packet. Configure the settings of the SNMPv1/SNMPv3 on Web Interface.

Local Management

LCD Operation

The LCD display provides instant information, such as voltage, current and power, for the PDU. In addition, users can use the interface to configure each PDU parameters and control each outlet on the Switched PDU. The LCD detects the installation orientation of the PDU (horizontally or vertically), therefore automatically rotates the screen to best fit the reading direction.

A. Scroll Mode: The PDU information will display in following order automatically when "Scroll Mode On" is configured.

Device Information
Bank 1 Information (2U series)
Bank 2 Information (2U series)
Environment Status (Displays when the ENVIROSENSOR is connected)
Alert

B. Main Menu Map

Alert	Current	
	Log	
Meter	Device	
	Bank	
	Outlet	
Control	Device	Immediate On
		Delay On
	Bank 1/2	Immediate Off
		Delay Off
	Outlet 1-N	Reboot
		Delay Reboot
Setting	LCD	Color
		Brightness
		Direction
		Screen off
	Reset	Account (User Name and Password)
		Except TCP
		To Default
	Reboot	
About	Model Name	
	Serial Number	
	Network	
	Hardware Version	
	Firmware Version	

©2016 Cyber Power Systems, Inc. All rights reserved.

Operation

LED Indicators

Indicator	Status	Description
Status	Green	The PDU status is ok.
	Orange	Warning.
	Red	Critical.
Tx/Rx	Off	The PDU power is off.
	On (Green)	The PDU power is on.
	Flashing	Receiving/transmitting data packet.
		Reset finished.
LINK	On	Indicates the PDU is connected to the LAN.
	Off	Indicates the PDU is not connected to the LAN.
Outlet	On	The outlet is on and providing power.
	Off	The outlet is off.

Environmental Monitoring (optional)

CyberPower PDUs along with the environment sensor (ENVIROSENSOR) provide temperature and humidity monitoring in a server closet and/or datacenter remotely. To connect the PDU with ENVIROSENSOR, use the RJ45 Ethernet Cable. Plug one end into the Daisy Chain (In)/ENVIROSENSOR port on the PDU and the other end into the RJ45 port on the ENVIROSENSOR (as shown below). When the PDU correctly connects to the ENVIROSENSOR, users can see the temperature and humidity data on the Web Interface.

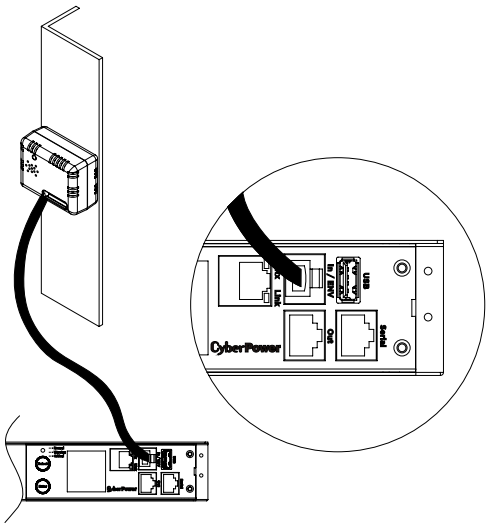

Device Reset

- To reset all the settings to default locally, use Reset function in the LCD display.
- To reset all the settings to default remotely, log in Web interface, enter the Reset page and apply the function.

Unattended/Automatic Shutdown

PowerPanel Business Edition software automatically initiates a graceful shutdown on the operating system. PowerPanel must be installed on every computer or server for which the shutdown is to take place. The software will receive a message from the PDU, and will perform the shutdown according to the instructions provided, including shut downs at exact times and dates.

Step 1. PC Configuration

1. Install PowerPanel Business Edition Client on every computer or server that will be part of the shutdown process (Follow the instructions in the PowerPanel Business Edition User Manual).
2. Configure the settings in PowerPanel Business Edition Client. See the PowerPanel Business Edition User Manual for additional help.

Step 2. PDU Configuration

Verify that the IP address of all computers that will be part of the shutdown process, are included in the Client List of web interface.

©2016 Cyber Power Systems, Inc. All rights reserved.

Step 3. Notification
Notifying the computers of potential outlet shutdown can be accomplished using the following methods:

- Outlets Control Menu: Performing the task of turning off or rebooting outlets.
- Scheduling Menu: Setting the application to perform the task of turning off or rebooting outlets. The notification will occur prior to the scheduled date/ time.
- Outlet Overload: In the event of PDU overload, notification will be sent prior to the PDU shutting down.

Firmware Upgrade

By upgrading the Firmware, you can obtain new features and updates/ improvements to existing functionality. There are two methods for upgrading the PDU firmware. Please follow the instructions below for the method that is appropriate for your application.

Note: Please do not turn the PDU off when processing the Firmware upgrade.

Option1: Single Device Upgrade
There are two files to update in order to upgrade the firmware version:

* cpsmpdumafw_XXX.bin
* cpsmpdumadata_XXX.bin

Note that the XXX is not part of the file name but is where the version number in the filename is given.

Use the following steps to upgrade the firmware.

1. Download the latest firmware from www.cyberpower.com
2. Extract the file to “C:\”
3. Open a command prompt window and navigate to “C:\”.
4. Login to the PDU with FTP command, type
   * ftp (after entering ftp mode, ftp> will display in the command prompt as shown below instead of C:\ )
   * ftp> open
   * To [current IP of the PDU] [port] (for example: To 192.168.22.126 21 [21 is the default ftp port for the PDU])
   * Input USER NAME and PASSWORD (same as the administrator account in Web interface default: admin/ cyber; admin/ cyber)
5. Upload the cpsmpdumafw_XXX.bin, type
   * ftp > bin
   * ftp > put cpsmpdumafw_XXX.bin
6. Upgrade complete, type
   * ftp > quit
7. The system will reboot after you type "quit". This reboot will take approx. 30 seconds.
8. Login to the FTP again
   * ftp
   * ftp> open
   * To [current IP of the PDU] [port] (for example: To 192.168.22.126 21) [21 is the default ftp port for the PDU])
   * Input USER NAME and PASSWORD
9. Upload cpsmpdumadata_XXX.bin
   * ftp > bin
   * ftp > put cpsmpdumadata_XXX.bin
10. Upgrade complete , type
    * ftp > quit
11. The system will reboot after you type “quit”

You can check to see if the firmware upgrade is successful by checking the “Firmware version” on the [System->About] webpage.

©2016 Cyber Power Systems, Inc. All rights reserved.

Firmware Upgrade

Option 2: Single or Multiple Device Upgrade
Use the following steps to upgrade the firmware.

1. Download the **Upgrade and Configuration Utility** from www.cyberpower.com
2. Open **Upgrade and Configuration Utility** from Start > All Programs > CyberPower Upgrade and Configuration Utility.
3. Waiting for discover finished.
4. Check the checkbox to select devices on list of **Operation View**.
5. Make sure **Account** and **Password** are valid on selected devices.
6. Choose **Upgrade Firmware** item to popup a **File Locations of Firmware & Data** Window in **Action** menu.
7. Click **Browse** button and assigning the firmware file path in **Firmware** field.
8. Same as step 6, assign the data file path in **Data** field.
9. Click **OK** button to popup a confirm **Upgrade Firmware** message box.
10. Click **Yes** button starting to upgrade firmware on selected devices.
11. The upgrade progress bar will show in **Last Action** column.
12. Waiting for upgrade firmware finished.
13. The result of upgrade firmware will show in **Result** column.

Note: If you don't want to wait the action, you can stop action via choose **Abort** item in **Action** menu. It's not recommended, because **Abort** action may cause the device abnormal or malfunction.

Troubleshooting

Problem	Possible Cause	Solution
PDU outlets do not provide power to connected equipment	1. Breaker tripped 2. Power cord is not properly plugged in	Reset Breaker, check the plug to insure its connected correctly. If the problem remains, contact technical support.
Amperage displayed on LCD Display exceeds the units capability	Overload	The load indicator shows red when overload. Reduce the load on the PDU until the overload is gone. If the problem remains, contact technical support.
Circuit breakers have tripped	1. Sustained overload 2. Excessive ambient or internal temperatures 3. Faulty breaker	Reset Breaker. If the problem remains, contact technical support.

Conformance Approvals

FCC Warning

WARNING!! This equipment has been tested and found to comply with the limits for a Class A Digital Device, pursuant to Part 15 of the FCC Rules. These limits are designed to provide reasonable protection against harmful interference in residential installation. This equipment generates, uses and can radiate radio frequency energy and, if not installed and used in accordance with the instruction manual, may cause harmful interference to radio communications. Operation of this equipment in a residential area is likely to cause harmful interference in which case the user will be required to correct the interference at his own expense.

Any special accessories needed for compliance must be specified in the instruction.

This device complies with part 15 of the FCC Rules. Operation is subject to the following two conditions: (1) This device may not cause harmful interference, and (2) this device must accept any interference received, including interference that may cause undesired operation.

Notice: (1) An unshielded-type power cord is required in order to meet FCC emission limits and also to prevent interference to the nearby radio and television reception. It is essential that only the supplied power cord by used. (2) Use only shielded cables to connect I/O devices to this equipment.

Note: THE MANUFACTURER IS NOT RESPONSIBLE FOR ANY RADIO OR TV INTERFERENCE CAUSED BY UNAUTHORIZED MODIFICATIONS TO THIS EQUIPMENT. SUCH MODIFICATIONS COULD VOID THE USER'S AUTHORITY TO OPERATE THE EQUIPMENT.

The Class A digital apparatus meets all requirements of the Canadian Interference-Causing Equipment Regulation.
Cet appareil numerique de la class A respecte toutes les exigencies du Reglement sur le materiel brouilleur du Canada.

©2016 Cyber Power Systems, Inc. All rights reserved.

Customer Service & Warranty

Product Registration

Thank you for purchasing a CyberPower product. Prompt product registration entitles coverage under the Limited Warranty and also allows the opportunity to be notified of product enhancements, upgrades, and other announcements.

Registration is quick and easy at www.cyberpower.com under "Support".

Cyber Power International

Feel free to contact our Tech Support department with installation, troubleshooting, or general product questions.

Cyber Power Systems, Inc.
Web: www.cyberpower.com

For USA and Canada:
4241 12th Ave East, Suite 400 Shakopee, MN55379
Toll-free: (877) 297-6937

For all other regions:
Please visit our website for local contact information.

Limited Warranty

Read the following terms and conditions carefully before using the CyberPower PDU series. By using the Product, you consent to be bound by and become a party to the terms and conditions of this Limited Warranty. If you do not agree to the terms and conditions of this Warranty, you should return the Product for a full refund prior to using it.

Who Is Providing This Warranty?
CyberPower Systems, Inc. provides this Limited Warranty.

What Does This Warranty Cover?
This warranty covers defects in materials and workmanship in the Product under normal use and conditions.

What Is the Period of Coverage?
For USA and Canada, CyberPower provides a 3-Year warranty to the original purchaser who owns the Product. For other regions, please contact your local CyberPower sales team for more information.

Who Is Covered?
This warranty only covers the original purchaser. Coverage ends if you sell or otherwise transfer the Product.

How Do You Get Service?
1. You can use the contact information mentioned above for instructions.
2. When you contact CyberPower, identify the Product, the Purchase Date, and the item(s) of Connected Equipment.
3. You must provide a purchase receipt (or other proof of the original purchase) and provide a description of the defect.

What Will We Do To Correct Problems?
CyberPower will inspect and examine the Product. If the Product is defective in material or workmanship, CyberPower will repair or replace it at CyberPower's expense, or, if CyberPower is unable to or decides not to repair or replace the Product (if defective) within a reasonable time, CyberPower will refund to you the full purchase price you paid for the Product (purchase receipt showing price paid is required).

Who Pays for Shipping?
We pay when we send items to you; you pay when you send items to us.

What Are Some Things This Warranty Does Not Cover?
1. This Warranty does not cover any software that is damaged or needs to be replaced due to the failure of the Product or any data that is lost as a result of the failure or the restoration of data or records, or the re-installation of software.
2. This Warranty does not cover or apply to: misuse, modification, operation or storage outside environmental limits of the Product or the equipment connected to it, nor for damage while in transit or in storage, nor if there has been improper operation or maintenance, or use with items not designed or intended for use with the Product, such as laser printers, appliances, aquariums, medical or life support devices, etc.

What are the Limitations?
1. This Warranty does not apply unless the Product and the equipment that was connected to it were connected to properly wired and grounded outlets (including compliance with electrical and safety codes of the most current electrical code), without the use of any adapters or other connectors.
2. The Product must have been plugged directly into the power source and the equipment connected to the Product must be directly connected to the Product and not "daisy-chained" together in serial fashion with any extension cords, another Product or device similar to the Product, surge suppressor, or power tap. Any such installation voids the Limited Warranty.
3. The Product and equipment connected to it must have been used properly in a suitable and proper environment and in conformance with any license, instruction manual, or warnings provided with the Product and the equipment connected to it.
4. The Product must have been used at all times within the limitations on the Product's VA capacity.
5. The sole and exclusive remedies of the Initial Customer are those provided by this Warranty.

©2016 Cyber Power Systems, Inc. All rights reserved.

Appendix A-Hyper Terminal

Hyper Terminal software can be used for basic PDU configuration. It utilizes a text-based interface and menu system. Navigation through the interface is done by typing the number of the menu option and pressing the Enter key. For COM port setting values, please refer to p.12 Option 4: Hyper Terminal or Terminal Emulator section. Note: The session will timeout and logout after 3 minutes of inactivity. Menu options are shown below:

[Main Menu]
1. Outlet Manager (Switched Series Only)
2. Network Settings
3. System Configuration
4. Account Settings
5. Configure System to Default
6. Logout

[Outlet Manager]
1. Outlet Control
2. Outlet Configuration

[Network Setting]
Physical MAC Address: 00-0C-15-40-08-A9
1. System IP: 192.168.24.20
2. Subnet Mask: 255.255.255.0
3. Default Gateway: 192.168.24.254
4. DHCP: Enabled
5. Http Port: 80
6. Http Access: Enabled

[System Configuration]
1. Date (mm/dd/yyyy) : 11/11/2011
2. Time (hh:mm:ss): 17:17:25
3. Name:PDU20SW8FNET
4. Contact: Administrator
5. Location: Server Room

[Account Setting]
1. Administrator
2. Viewer (Web Only)

[Configure System to Default]
Sure to Configure System to Default
1. Yes
2. No

Appendix B-Power Device Network Utility

Overview

The CyberPower Power Device Network Utility is an easy-to-use interface which is used for establishing IP addresses on CyberPower PDU devices.

Installation

Step 1. Download the Power Device Network Utility software.
Step 2. Select Next in the software wizard (Shown in Figure 1.).

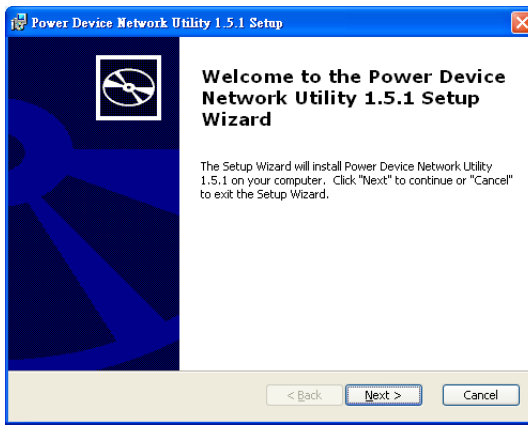

Figure 1.

©2016 Cyber Power Systems, Inc. All rights reserved.

Appendix B-Power Device Network Utility

Step 3. Choose an installation directory. Select Next (Shown in Figure 2.).

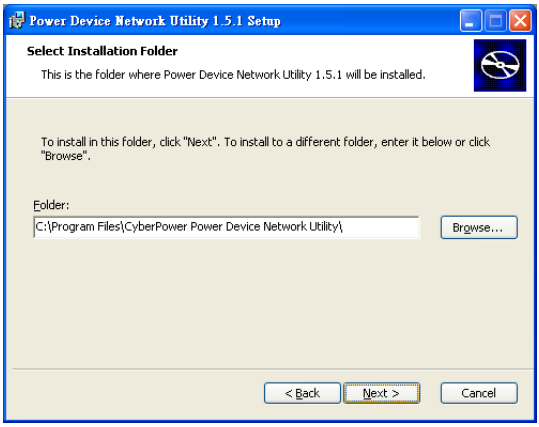

Figure 2.

Step 4. Select Install to comfirm the settings and install (Shown in Figure 3.).

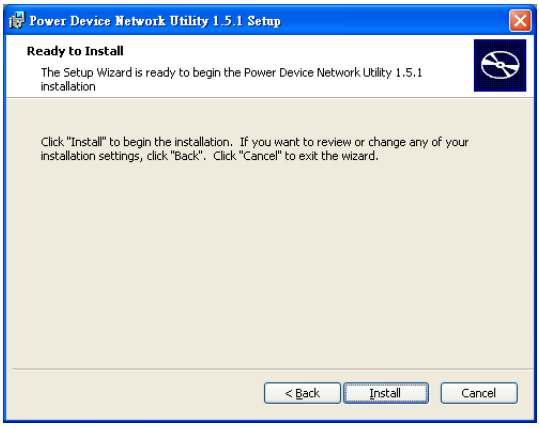

Figure 3.

Step 5. Select Finish to finalize the installation (Shown in Figure 4.).



Figure 4.

©2016 Cyber Power Systems, Inc. All rights reserved.

Appendix B-Power Device Network Utility

Launch Program

To launch the Power Device Network Utility and get started, select Programs from the Start menu in Windows and locate the new folder and icons for Power Device Network Utility. Select Power Device Network Utility from the program folder (Shown in Figure 3.).

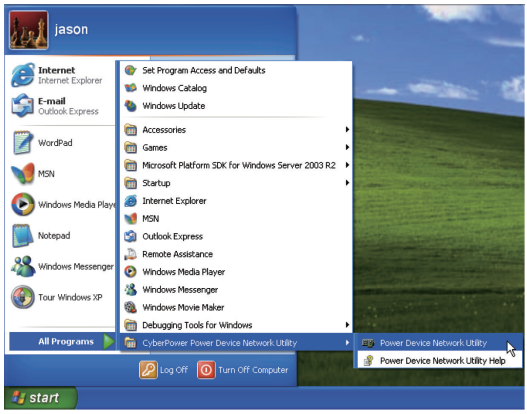

Figure 3. Power Device Network Utility

Getting Started

The Power Device Network Utility scans the network for devices with MAC addresses that match CyberPower network hardware. Once found, the device(s) can then be figured with a specific IP address, subnet mask, and gateway address. This allows the device(s) to function properly on the network and interface with CyberPower Management Console.

Step 1. Select the appropriate PDU device from the Equipment List (Shown in Figure 4.).

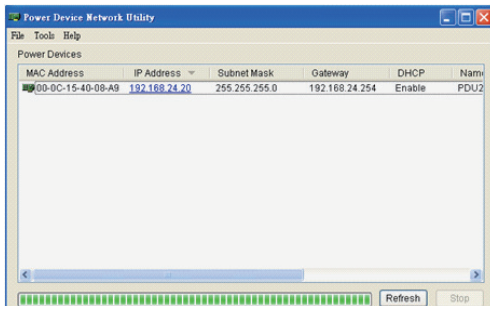

Figure 4. Equipment List

Note: If the PDU does not appear on the list, click the Refresh button to rescan the network. If it still does not appear, ensure that the PDU is turned on and was installed correctly.

Pressing Stop will cancel the scan/refresh process.

Note: If your computer has a software firewall installed, you may see a Windows Security Alert message (Shown in Figure 5.).

In Windows XP SP2, the default firewall alert message is shown as Figure 5. You need to allow the Power Device Network Utility access through the firewall.



Figure 5. Windows Security Alert

©2016 Cyber Power Systems, Inc. All rights reserved.

Step 2. Assign a valid IP Address to the PDU

Option 1: Assisted Setup (recommended)
With the appropriate device selected from the Equipment List, open the Network Settings menu (Shown in Figure 6.). [Tools=>Device Setup]. In the Device Network Setting Menu, enter a valid IP address, subnet mask, and gateway address to setup the PDU device.

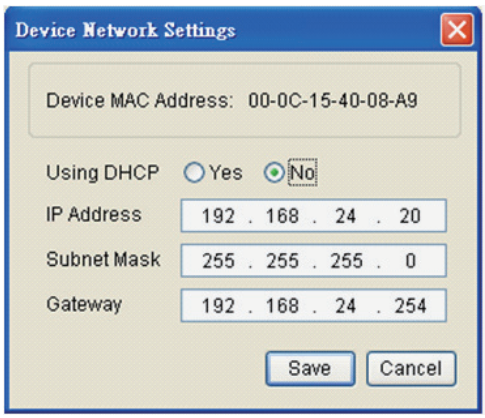

Figure 6. Network Setting Menu (Device Setup)

Note: The DHCP option is not available for all power devices.

Step 3. Authentication
Enter the user name and password of the PDU device at the Authentication menu (Shown in Figure 7.).

Note: The default username is "**admin/cyber**" and the default password is "**admin/cyber**".

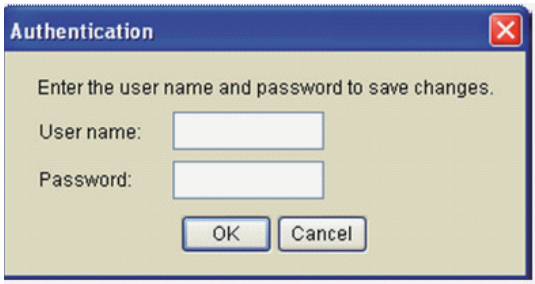

Figure 7. Authentication screen

Advanced Settings

Timeout Settings
The Timeout Setting (Shown in Figure 8.). [Edit=>Timeout Settings] is used to specify the wait time when scanning for network PDU devices. When there are many devices on the local network, it may take extended periods of time to locate all the devices. The timeout function is used to limit the search time.

The default setting is 3 seconds. Valid values are 3 to 60 seconds.



Figure 8. Timeout Setting

©2016 Cyber Power Systems, Inc. All rights reserved.

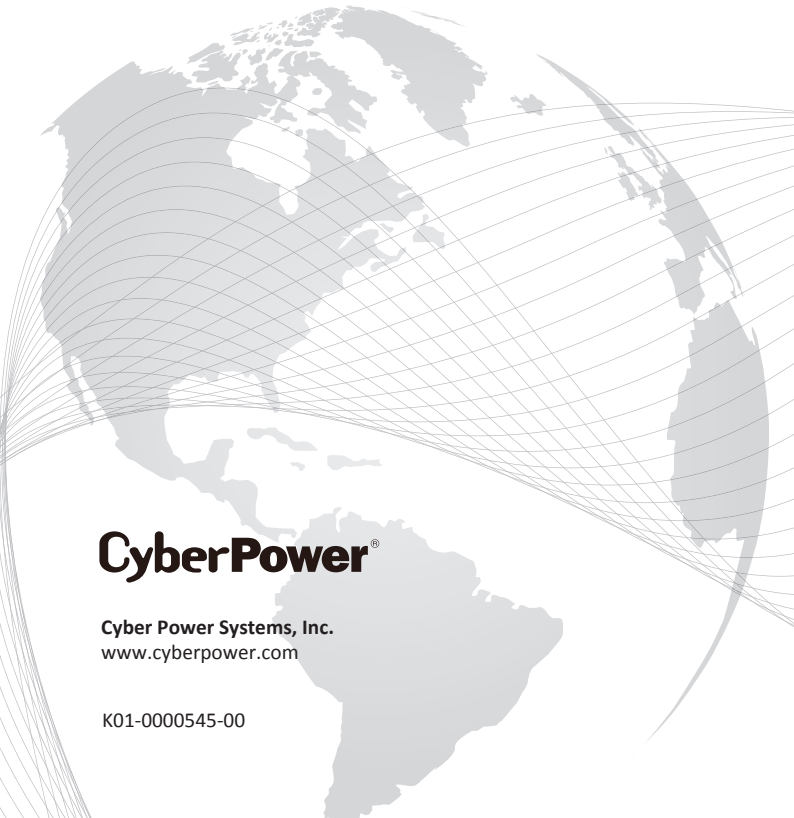

CyberPower®

Cyber Power Systems, Inc.
www.cyberpower.com

K01-0000545-00