ThinkStation P320 Tower 30BH004R--

Region
EMEA

Machine Type
30BH

TopSeller
TopSeller

Processor
Xeon E3-1245 v6 4C/3.7GHz/8MB/73W/DDR4-2400

Graphcis
Intel HD P630

Memory
1x8GB UDIMM DDR4-2400 ECC

Disks
1x256GB SSD 2.5" SATA6Gbps Opal

M.2 Drives
None

Optical
HH DVD±RW

Media Reader
9-in-1

Power Supply
400W Platinum Fixed

Optional Ports
Serial

Keyboard / Mouse
USB / USB Optical

Operating System
Windows 10 Pro 64

Warranty
3-year, Onsite

Global
No

End of Support
Sep 26, 2022

Ann Date (mm/yy)
09/17

Note:
Country Code "US" is for United States, "++" is for EMEA countries (e.g. AD - Saudi, Arabia, AT - Austria, BM - Bulgaria, etc.), "xx" is for EAST countries (e.g. BM - Bulgaria, CX - Hungary, CY - Cyprus, etc.), and "**" is for MEA countries (e.g. AD - Saudi, Arabia, ED - Egypt, EQ - Sweden, etc.). Please be aware that the EMEA/ EAST/MEA models listed above might not be available in all countries

www.lenovo.com

This publication was developed for products and services offered in the United States and E.M.E.A countries. Lenovo may not offer the products, services or features discussed in this document in other countries. Lenovo may withdraw an offering at any time. Information is subject to change without notice. Consult your local representative for information on offerings available in your area. Lenovo reserves the right to change specifcations or other product information without notice. Lenovo is not responsible for photographic or typographical errors. Lenovo provides this publication “as is” without warranty of any kind, either express or implied, including the implied warranties of merchantability or ftness for a particular purpose.

http://psref.lenovo.com
Visit psref website for the latest version of Product Specifcations Reference.

© Lenovo, 2018. All rights reserved.



ThinkStation P320 Tower Platform Specifications

Components	Specification
Chipset	Intel C236 Chipset
Intel AMT	Intel Active Management Technology 11 on Xeon models, Intel Standard Manageability on other models
Processor	One Intel "Kaby Lake" or "Skylake" processor as listed: "Kaby Lake" Xeon E3-1280 v6 — 4C/3.9GHz/8MB/72W/DDR4-2400 Xeon E3-1275 v6 — 4C/3.8GHz/8MB/73W/DDR4-2400 Xeon E3-1270 v6 — 4C/3.8GHz/8MB/72W/DDR4-2400 Xeon E3-1245 v6 — 4C/3.7GHz/8MB/73W/DDR4-2400 Xeon E3-1240 v6 — 4C/3.7GHz/8MB/72W/DDR4-2400 Xeon E3-1230 v6 — 4C/3.5GHz/8MB/72W/DDR4-2400 Xeon E3-1225 v6 — 4C/3.3GHz/8MB/73W/DDR4-2400 Xeon E3-1220 v6 — 4C/3GHz/8MB/72W/DDR4-2400 Core i7-7700K — 4C/4.2GHz/8MB/91W/DDR4-2400 Core i7-7700 — 4C/3.6GHz/8MB/65W/DDR4-2400 Core i5-7600 — 4C/3.5GHz/6MB/65W/DDR4-2400 Core i5-7500 — 4C/3.4GHz/6MB/65W/DDR4-2400 Core i5-7400 — 4C/3GHz/6MB/65W/DDR4-2400 Core i3-7300 — 2C/4GHz/4MB/51W/DDR4-2400 Core i3-7100 — 2C/3.9GHz/3MB/51W/DDR4-2400 "Skylake" Xeon E3-1245 v5 — 4C/3.5GHz/8MB/80W/DDR4-2133 Xeon E3-1240 v5 — 4C/3.5GHz/8MB/80W/DDR4-2133 Xeon E3-1230 v5 — 4C/3.4GHz/8MB/80W/DDR4-2133 Xeon E3-1225 v5 — 4C/3.3GHz/8MB/80W/DDR4-2133 Xeon E3-1220 v5 — 4C/3GHz/8MB/80W/DDR4-2133 Core i7-6700 — 4C/3.4GHz/8MB/65W/DDR4-2133 Core i5-6500 — 4C/3.2GHz/6MB/65W/DDR4-2133 Core i5-6400 — 4C/2.7GHz/6MB/65W/DDR4-2133 Core i3-6100 — 2C/3.7GHz/3MB/51W/DDR4-2133
Memory DIMM slots	4 DIMM slots, 2-channel (integrated memory controller in processor)
Memory type/capacity	Up to 64GB ECC/non-ECC (4 x 16GB), DDR4-2400. UDIMM. "Skylake" processor supports up to DDR4-2133. Core i7 and i5 processors cannot support ECC.
Intel HD Graphics in processor	Integrated Intel HD P530 in Xeon E3-12x5 v5 processors, or Intel HD P630 in Xeon E3-12x5 v6 processors, or Intel HD 530 in Core i7, i5, or i3 6000 processors. or Intel HD 630 in Core i7, i5, or i3 7000 processors. Works along with discrete graphics to support multi-display, enables three display connectors (2 DP, 1 VGA) on rear.
Discrete graphics	Two PCI Express 3.0 x16 slots for graphics adapters. Up to two Quadro P1000 on 250 watts models. Or up to two Quadro P2000, or up to one Quadro P4000 on 400 watts models. Supports the following NVIDIA graphics adapters: Adapter / Cores / Memory / Power / Connector NVS 310 / 48 / 1GB / 19.5W / 2xDP NVS 315 / 48 / 1GB / 19.5W / 2xDVI-I SL/2xDP NVS 510 / 192 / 2GB / 33.4W / 4xmini DP NVS 810 / 1024 / 4GB / 68W / 8xmini DP Quadro P400 / 256 / 2GB / 30W / 3xminiDP Quadro P600 / 384 / 2GB / 40W / 4xminiDP Quadro P1000 / 640 / 4GB / 47W / 4xminiDP Quadro P2000 / 1024 / 5GB / 75W / 4xDP Quadro P4000 / 1792 / 8GB / 105W / 4xDP
Onboard drive controller	Five onboard SATA 6.0Gb/s connectors for optical and disk drives plus one SATA connector for optional eSATA. RAID 0, 1, 5, 10 support
Drive Bays	Two external 5.25" bays, two internal 3.5" bays (see right). Up to one 9mm optical plus 4 x 3.5" disk drive bays plus two M.2 NVMe SSD
Supporting disk drives	3.5" SATA HDD (7.2K 6Gbs) — 1TB/2TB/4TB/1TB hybrid/2TB hybrid 2.5" SATA SSD (6Gbs) — 256GB Opal/512GB/512GB Opal/1TB Opal/2TB opal M.2 NVMe SSD, via PCIe adapter — 256GB Opal/512GB Opal/1TB Opal, PCIe 3.0 x4, up to 2; or 16GB Intel Optane Memory, PCIe 3.0 x2
Max internal storage	16TB (4 x 4TB 3.5" HDDs) plus 2TB (2 x 1TB) M.2 NVMe SSD
Media reader	9-in-1 card reader. Optional 29-in-1 card reader on selected models

Components	Specification
Power supply	One 250 watts with variable speed fan, autosensing, Climate Savers Computing Bronze, 80 PLUS Bronze qualified. Or one 400 watts with variable speed fan, autosensing, Climate Savers Computing Platinum, 80 PLUS Platinum qualified.
Onboard Ethernet	One onboard gigabit ethernet, Intel I219LM, supports Wake-on-LAN
HD Audio	Realtek ALC662 codec
TPM	Standard, TCG 2.0-compliant
Front ports	Two USB 3.0, microphone (3.5mm), headphone (3.5mm)
Rear ports	1 VGA and 2 DisplayPort (for Intel HD Graphics models only), two USB 2.0, four USB 3.0, one serial (9-pin), one ethernet (RJ-45), three analog audio ports (line-in, line-out, mic-in)
Mechanical	• Raven black color; metal case • 6.89"W x 16.77"D x 14.8"H • 175mm W x 426mm D x 376mm H • 28.66 lb (13kg) max configuration • 25-liter
Environmental certifications	GREENGUARD certified/RoHS-compliant/EPEAT Gold rating/ ENERGY STAR 6.1 qualified
Limited warranty	1 or 3-year limited onsite service with 9x5/NBD. Some parts are Customer Replaceable Units.
ISV certifications	Please visit www.thinkworkstations.com/isv-certifications/

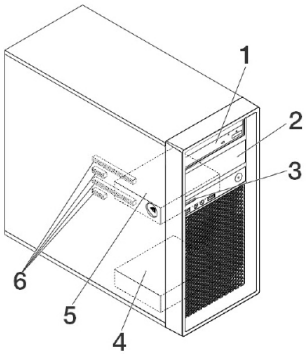

Drive Bays and PCIe Slots

Bay 1 and Bay 2	5.25", support one of the following: HH optical/flex module/9mm optical+3.5" HDD bay/ 3.5" HDD bay/Front Access Storage Enclosure (FASE) *Note:* *1. Flex module supports one or more of the following: 9mm optical/ 29-in-1 reader/front IEEE 1394/front eSATA.* *2. Up to one flex module/FASE per system.*
Bay 3	Optional 9-in-1 single slot reader
Bay 4	Standard 3.5" HDD bay
Bay 5	Standard 3.5" HDD bay
6 -Slots	Four PCIe slots (top-down): Slot 1: Half length, full height, PCIe 3.0 x16 (near CPU) Slot 2: Half length, full height, PCIe 3.0 x1 Slot 3: Half length, full height, PCIe 3.0 x16 (x4 elec) Slot 4: Half length, full height, PCIe 3.0 x1 *Note:* *1. Both discrete graphics adapter and M.2 NVMe SSD should be installed on slot 1 or slot 3, the maximum quantity of discrete graphics adapter and M.2 NVMe SSD is 2.* *2. When two discrete graphics adapters are used, no other PCIe card can be used.*

© Copyright Lenovo 2017. All rights reserved.

ThinkStation P320 Tower









