PHILIPS

Lighting



Downlight DN060B

DN060B LED18S/840 PSU WH

LED Module, system flux 1800 lm - 840 neutral white - Power supply unit - White

The LEDINAIRE range contains a selection of popular off-the-shelf LED luminaires that come with the high Philips quality levels at a competitive price. Reliable, energy-efficient and affordable – just what you need.

Product data

General Information	
Lamp family code	LED18S [LED Module, system flux 1800 lm]
Beam angle of light source	90 x 90 °
Light source colour	840 neutral white
Light source replaceable	No
Number of gear units	1 unit
Gear	-
Driver/power unit/transformer	PSU [Power supply unit]
Driver included	Yes
Optic type	Symmetrical
Luminaire light beam spread	10°
Connection	Push-in connector 2-pole
Cable	-
Protection class IEC	Safety class I
Glow-wire test	Temperature 650 °C, duration 5 s
Flammability mark	NO [-]
CE mark	CE mark
ENEC mark	-
Warranty period	3 years

Constant light output	No
Number of products on MCB	48
RoHS mark	RoHS mark

Operating and Electrical	
Input voltage	220-240 V
Input frequency	50 to 60 Hz
Control signal voltage	-
Inrush current	17.2 A
Inrush time	0.0016 ms
Power factor (min.)	0.9

Controls and Dimming	
Dimmable	No

Mechanical and Housing	
Housing material	Metal/Plastic
Reflector material	Steel
Optic material	Polycarbonate

Downlight DN060B

Optical cover/lens material	Polycarbonate
Fixation material	Stainless steel
Optical cover/lens finish	Opal
Overall height	120 mm
Overall diameter	233 mm

Approval and Application

Ingress protection code	IP20 [Finger-protected]
Mech. impact protection code	IK02 [0.2 J standard]

Initial Performance (IEC Compliant)

Initial luminous flux	1800 lm
Luminous flux tolerance	+/-10%
Initial LED luminaire efficacy	100 lm/W
Init. Corr. colour temperature	4000 K
Init. colour rendering index	>80
Initial chromaticity	(0.38, 0.38) SDCM <5
Initial input power	18 W
Power consumption tolerance	+/-10%

Over Time Performance (IEC Compliant)

Driver failure rate at 5,000 hours	1.50 %
Median useful life L70B50	30000 h
Median useful life L80B50	20000 h
Median useful life L90B50	10000 h

Application Conditions

Ambient temperature range	0 to +35 °C
Suitable for random switching	Not applicable

Product Data

Full product code	871016330663699
Order product name	DN060B LED18S/840 PSU WH
EAN/UPC – product	8710163306636
Order code	30663699
Numerator – quantity per pack	1
Numerator – packs per outer box	8
Material no. (12NC)	911401532131
Net weight (piece)	0.630 kg

Dimensional drawing

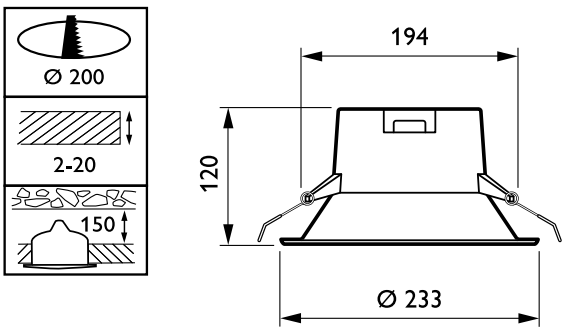

SmartBright LED DN060B-DN063B

© 2018 Philips Lighting Holding B.V. All rights reserved. Philips Lighting reserves the right to make changes in specifications and/or to discontinue any product at any timewithout notice or obligation and will not be liable for any consequences resulting from the use of this publication.