AKR 310/IX

12NC: 857831038700

GTIN (EAN) code: 8003437933271

SENSING THE DIFFERENCE



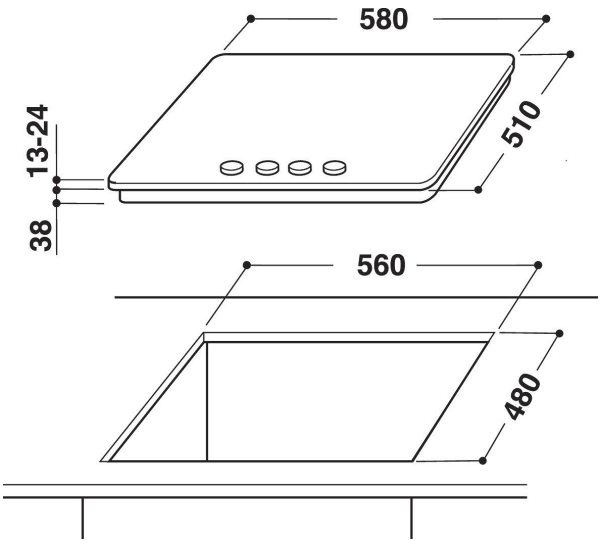

Whirlpool gas hob: 4 gas burners - AKR 310/IX

Standard Whirlpool technologies and features for you to enjoy.

Stainless Steel
For the stylish modern look in your kitchen.

Front Controls
Complete control over your cooking. Easily accessible and genuinely intuitive, the controls are conveniently positioned on the front panel of your hob, providing a frictionless cooking experience.

- Enamel Pan Supports
- Electromagnetic safety device for each burner
- Black body/Inox base knobs
- 2 Rectangular (retail design) Rod iron grids
- Front controls
- 60 cm hob
- Mechanical control
- Ignition type: knob
- 4 Burners
- 4 burners: 1 Rapid 3000 W burner, 1 Semirapid 1750 W burner, 1 Semirapid 1750 W burner, and 1 Auxiliary 1000 W burner.
- Supply cord included
- Dimensions HxWxD: 40x580x510 mm
- Niche dimensions HxWxD: 50x562x480 mm
- Voltage: 230 V
- Gas Connection Rating: 7500 W

AKR 310/IX

12NC: 857831038700

GTIN (EAN) code: 8003437933271

Whirlpool
SENSING THE DIFFERENCE

MAIN FEATURES

Product group	Hob
Construction type	Built-in
Type of control	Mechanical
Type of control settings	N/A
Number of gas burners	4
Number of electric cooking zones	0
Number of electric plates	0
Number of radiant plates	0
Number of halogen plates	0
Number of induction plates	0
Number of electric warming zones	0
Location of control panel	Front
Basic surface material	Inox
Main colour of product	Inox
Electrical connection rating (W)	0
Gas connection rating (W)	7500
Current (A)	0,6
Voltage (V)	230
Frequency (Hz)	50
Length of Electrical Supply Cord (cm)	85
Plug type	No
Gas connection	Cilindric
Width of the product	580
Height of the product	40
Depth of the product	510
Minimum niche height	20
Minimum niche width	560
Niche depth	480
Net weight (kg)	7.7
Automatic programmes	No

TECHNICAL FEATURES

Power on indicator	No
Number of indicators	0
Type of regulation	Temperature regulated
Type of lid	Glass
Residual heat indicator	Without
Main on/off switch	No
Safety device	Yes
Timer	No

PERFORMANCES

Energy input	Gas