FAST, ROBUST MULTIFUNCTION COLOUR LASER



Epson AcuLaser **CX28DN Series**



- A4 colour multifunction laser for workgroups
- Print up to 24 ppm in colour and mono
- Print, scan and copy functions
- Flexible duplex printing and duplex automatic document feeder
- Standard PostScript 3 and PCL 6 emulations
- Scan-to-E-mail, FTP, SMB, USB key and more
- Gigabit Ethernet and IPv6 support

Add productivity and versatility to your business with this multifunctional colour laser printer, scanner and copier.

Built for demanding workgroups
The Epson AcuLaser CX28DN Series handles a variety of printing, scanning and copying needs of large workgroups. With a duty cycle up to 60,000 pages and impressive print and copy speeds of up to 24 ppm in colour and mono, it's ideally suited to high productivity applications. The standard duplex and 50 sheet duplex automatic document feeder makes scanning and copying double-sided multiple page documents simple.

Versatile business solution
Expand your printing capacity to match your business by adding an optional Hard Disk to increase usage or by adding a second paper cassette to increase paper capacity of up to 850 sheets. You can also scan to a PC, a network folder or email, or simply scan directly to a USB key.

Easy to integrate into complex IT systems
The Epson AcuLaser CX28DN Series fits easily into advanced IT environments, with standard support for the latest Windows, Mac and Linux systems and standard emulations from PS3 to PCL6 and PCL5c/e.

Keeping cost and environmental impact low
This ENERGY STAR® qualified printer uses less power in standby mode and when printing, helping to keep energy impact low. Featuring separate CMYK photoconductors you also avoid unnecessary waste of materials, whilst the high capacity toners mean running costs are not compromised.



EPSON®
EXCEED YOUR VISION

PRODUCT SPECIFICATIONS

PRINT FEATURES	
Printing technology	Colour laser
Print resolution	Up to 600x600 dpi
Print speed	Up to 24 ppm (colour and mono A4)
First page out time	Less than 18 seconds (colour and mono A4)
Warm-up time	Less than 50 seconds
Maximum monthly volume	Up to 60,000 pages
COPY FEATURES	
Copy resolution	Up to 600x600 dpi
Copy speed	Up to 24 cpm (colour and mono A4)
First copy out time	Less than 25 sec (A4 mono) and 28 sec (A4 colour)
Multiple copies	1 – 99 copies
ADF continuous copies	Up to 50 sheets
Zoom	25 – 400%
SCAN FEATURES	
Scan technology	Flatbed scan + Duplex ADF (Automatic Document Feeder)
Scan speed	Up to 142 mm/sec
Scan resolution	Up to 600x600 dpi
Colour depth	24bit
Compatibility	Twain, WIA
Scan area	Up to 215.9x330.2 mm
Scan-to functions	Scan to Email, FTP, SMB, USB key in TIFF, PDF, JPEG
CONTROLLER	
Processor	500MHz
Memory	Standard: 256 MB, maximum: 768 MB
Printer language	PCL6, PCL5c/e, PostScript 3 emulation
INTERFACES	
Standard interfaces	Ethernet (10/100/1000Base-TX), High-Speed USB 2.0, USB Host
Network printing protocols	TCP/IP: IPP1.1, LPD
Network management protocols	TCP/IP: FTP (client/server), DHCP, SNMP, BootP, ARP, HTTPv1.1, HTTP3, SMTP, POP3, SLPv2, LDAPv3, TCPIP Socket printing, DNS, DDNS, Bonjour, AutoIP, Ping, IPv4, IPv6, IPsec
Panel	Yes (20 characters x 4 lines LCD, 24 buttons)
MEDIA HANDLING	
Standard paper input	350 sheets (100-sheet MP tray + 250-sheet paper cassette)
Maximum paper input	850 sheets (100-sheet MP tray + 250-sheet paper cassette + Optional 500-sheet paper cassette)
Paper size	A4, A5, B5, LT, GLT, LGL, GLG, EXE, Statement, Folio, Transparency, Labels, Chokei#3, C6, Monarch, DL, Com10, ISO-B5, Postcards, Custom size: from 92~148 mm to 216~356 mm
Paper weight	60~210 g/m²
Optional paper handling	500-sheet paper cassette - C12C802591 - Max: 1
Duplex	Standard (built-in)
ADF Specs	50 sheets Duplex ADF
Paper Output	250 sheets (face down)
POWER REQUIREMENTS	
Norms	ENERGY STAR®
Voltage/frequency/current	220~240V / 50~60Hz ±3% / 6.0A
Power consumption	Max: 1250W; Continuous printing: 650W; Ready: 200W; Sleep: 25W; Power Off: 0W
OS SUPPORT	
Windows support	Windows 7 / Vista (32/64bit) / XP (32/64bit) / Server 2008 (32/64bit) / Server 2003 (32/64bit) / Windows 2000 (SP4 or later)
Mac support	Mac OS X 10.2.8 or later
Other	Red Hat Linux 9.0, SuSE Linux 8.2
DIMENSIONS AND WEIGHT	
AL-CX28DN	539x590x578 mm – 50 kg (without consumables)
AL-CX28DTN	539x590x688 mm – 56.8 kg (without consumables)
500-sheet paper cassette	539x590x111 mm – 6.8 kg
Printer cabinet	515x580x480 mm – 14.8 kg
ENVIRONMENTAL CONDITIONS	
Temperature	Operation mode: 10~35°C / Storage: 0~35°C
Humidity	Operation mode: 15~85%RH / Storage: 30~85%RH
Sound power	Operation: 6.49B, Ready mode: 5.13B
Sound pressure	Operation: 54.5 dB(A), Ready mode: 39 dB(A)
REGULATIONS	
Materials	Not containing any materials prohibited by country regulations Hazardous materials not exceeding permitted value
Chemical regulations	Compliant with OSHA, TSCA and EINECS
Environmental measures	ENERGY STAR®, RoHS compliant
WARRANTY[*2]	
Standard	1 year on-site warranty
Optional	3 years on-site extended warranty: ECPGRP55

Epson AcuLaser **CX28DN Series**

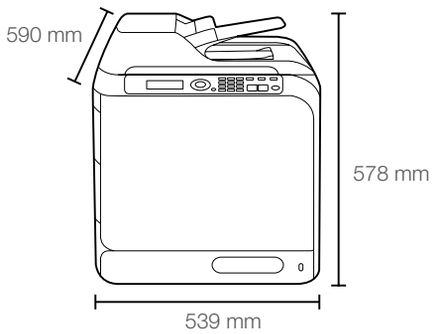

PRODUCT MODELS

Epson AcuLaser CX28DN	C11CA62001BZ
Epson AcuLaser CX28DTN	C11CA62001BY
Epson AcuLaser CX28DNC	C11CA62001BX
Epson AcuLaser CX28DTNC	C11CA62001BW

SUPPLIES

High Capacity Toner Cartridges:	
Black – 8,000 pages*	C13S050493
Cyan – 8,000 pages*	C13S050492
Yellow – 8,000 pages*	C13S050490
Magenta – 8,000 pages*	C13S050491
Initial CMYK toner – 3,000 pages	
Imaging Units:	
Black – 30,000 pages*	C13S051194
Cyan – 30,000 pages*	C13S051193
Yellow – 30,000 pages*	C13S051191
Magenta – 30,000 pages*	C13S051192
Waste Toner Bottle:	
Mono: 36,000 / Colour: 9,000	C13S050498

*Based on 5% coverage

OPTIONS

500-sheet paper cassette	C12C802591
40GB hard disk drive	C12C824491
Printer cabinet	7105715

TONER CARTRIDGE COLLECTION*3

This free service helps us to collect and recycle used Epson toner cartridges in a safe and environmentally friendly way. There are three easy ways to dispose of your empty cartridges and take an active role in reducing waste:

- Put them in a Toner Cartridge Collection box which will be picked up once full
- Return them free of charge by post
- Drop them off at an Epson Express Centre

BETTER PRODUCTS FOR A BETTER FUTURE

At Epson, we know that planning for the future requires a strong commitment to the environment. That is why we strive to create innovative products that are reliable, recyclable, and energy efficient. Better products that use fewer resources help ensure a better future for us all.

*1 For more information please visit www.epson-europe.com
*2 Warranty offers are not available for all countries. Please contact your local Epson representative
*3 Please visit www.epson.com/recycle for more details about products and availability

Better Products for a Better Future

For more information please contact

Telephone: 0871 222 6702 (UK)*
01 436 7742 (Republic of Ireland)
E-mail: enquiries@epson.co.uk
Chat: etalk.epson-europe.com
Fax: 0871 222 6740
Web: www.epson.co.uk
www.epson.ie

* Calls cost 10 pence per minute from a standard BT landline.
Calls from other networks and mobiles may vary.

Trademarks and registered trademarks are the property of Seiko Epson Corporation or their respective owners.
Product information is subject to change without prior notice.

CX28DN_Series_DS – 1GB – 06/10 – 7105871

EPSON®