DP 2GS (IX)

12NC: F062237

GTIN (EAN) code: 8007842622379



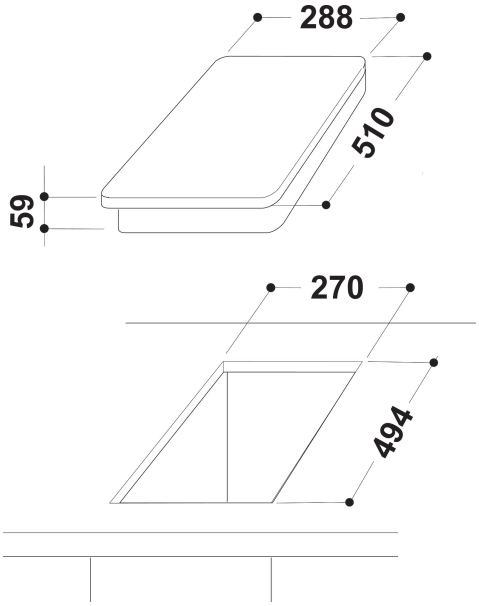

MAIN FEATURES	
Product group	Hob
Construction type	Built-in
Type of control	Mechanical
Type of control settings	Knob
Number of gas burners	2
Number of electric cooking zones	0
Number of electric plates	0
Number of radiant plates	0
Number of halogen plates	0
Number of induction plates	0
Number of electric warming zones	0
Location of control panel	Front
Basic surface material	Stainless Steel
Main colour of product	Inox
Electrical connection rating (W)	0.6
Gas connection rating (W)	0
Current (A)	-
Voltage (V)	230
Frequency (Hz)	50/60
Length of Electrical Supply Cord (cm)	100
Plug type	No
Gas connection	N/A
Width of the product	288
Height of the product	510
Depth of the product	41
Minimum niche height	494
Minimum niche width	270
Niche depth	40
Net weight (kg)	4
Automatic programmes	No

TECHNICAL FEATURES	
Power on indicator	No
Number of indicators	0
Type of regulation	-
Type of lid	Without
Residual heat indicator	Without
Main on/off switch	No
Safety device	No
Timer	No

PERFORMANCES	
Energy input	Gas