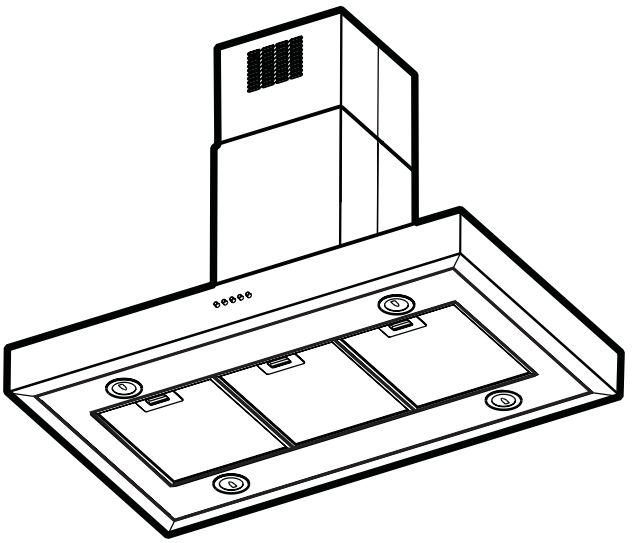

GB **User and maintenance manual**

Whirlpool

IMPORTANT SAFETY INSTRUCTIONS

These instructions shall also be available on website: docs.whirlpool.eu.

YOUR SAFETY AND THAT OF OTHERS IS VERY IMPORTANT

This manual and the appliance itself provide important safety warnings, to be read and observed at all times.

⚠ This is the attention symbol, pertaining to safety, which alerts users to potential risks to themselves and others.

All safety warnings are preceded by the attention symbol and the following terms:

⚠ DANGER: **indicates a hazardous situation which, if not avoided, will cause serious injury.**

⚠ WARNING: **indicates a hazardous situation which, if not avoided, could cause serious injury.**

All safety warnings specify the potential danger/warning to which they refer and indicate how to reduce the risk of injury, damage and electrical shock resulting from incorrect use of the appliance. Comply with the following instructions:

- Installation or maintenance must be carried out by a specialized technician, in compliance with the manufacturer's instructions and local safety regulations. Do not repair or replace any part of the appliance unless specifically requested in the user manual.
- The appliance must be disconnected from the power supply before carrying out any installation work.
- Earthing of the appliance is compulsory. (Not necessary for class II hoods identified by the ⧈ symbol on the specifications label).
- The power supply cable must be long enough to permit connecting the appliance to the mains socket outlet.
- Do not pull the power supply cable in order to unplug the appliance.
- The electrical components must no longer be accessible to the user after installation.
- Do not touch the appliance with any wet part of the body and do not operate it when barefoot.
- This appliance may be used by children older than 8 years of age and by persons with reduced physical, sensory or mental capacities or with inadequate experience and knowledge only if they are supervised or if they have been taught how to use the appliance in conditions of safety and if they are aware of the dangers involved. Children must not play with the appliance. Cleaning and maintenance must not be carried out by children, unless they are supervised by adults.
- Do not repair or replace any part of the appliance unless specifically indicated in the manual. Defective parts must be replaced using genuine parts. All other maintenance services must be carried out by a specialized technician.
- Children must be supervised to ensure they do not play with the appliance.
- When drilling through a wall or the ceiling, pay attention not to damage electric connections and/or pipes.
- The ventilation ducts must always discharge to the outside.

- Exhaust air must not be vented through a flue used for removal of fumes produced by appliances burning gas or other fuels, but must have a separate outlet. All national regulations governing extraction of fumes must be observed.
- If the hood is used together with other appliances operating on gas or other fuels, the negative pressure in the room must not exceed 4 Pa (4 x 10-5 bar). For this reason, make sure the room is adequately ventilated.
- The Manufacturer declines any liability for improper use or incorrect setting of the controls.
- Regular cleaning and maintenance is essential to correct functioning and good performance of the appliance. Frequently clean all encrustations from dirty surfaces to prevent the accumulation of grease. Regularly clean or replace the filters.
- Never flame cook food (flambé) under the appliance. Using free flames might cause fire.
- Do not leave frying pans unattended when frying, as the frying oil may catch fire.
- Failure to observe the instructions for cleaning the hood and replacing the filters may result in a fire.
- The fume extractor hood must never be opened without the grease filters installed and it should be kept under constant supervision.
- Gas appliances must be used under the extractor hood only with pans resting.
- When using more than three gas cooking points, the hood should be operating at power level 2 or greater. This will eliminate heat congestion in the appliance.
- Before touching the bulbs, first ensure that they are cold.
- Do not use or leave the hood without its lamps correctly installed - risk of electric shock.
- Wear work gloves for all installation and maintenance operations.
- The product is not suitable for outdoor use.
- When the hob is in use, accessible parts of the hood may become hot.

KEEP THIS BOOKLET FOR FUTURE CONSULTATION.

Declaration of Conformity CE

- This appliance has been designed, manufactured and marketed in compliance with:
  - the ecodesign requirements of european regulations n. 66/2014, n. 327/2011, n. 244/2009, n. 245/2009, n. 1194/2012, n. 2015/1428;

Electrical safety of the appliance can only be guaranteed if it is correctly connected to an approved earthing system.

Energy saving tips

- Switch ON the hood at minimum speed when you start cooking and kept it running for few minutes after cooking is finished.
- Increase the speed only in case of large amount of smoke and vapour and use boost speed(s) only in extreme situations.
- Replace the charcoal filter(s) when necessary to maintain a good odour reduction efficiency.
- Clean the grease filter(s) when necessary to maintain a good grease filter efficiency.
- Use the maximum diameter of the ducting system indicated in this manual to optimize efficiency and minimize noise.

INSTALLATION

After unpacking the appliance, check for any transport damage. In the event of problems, contact the dealer or your nearest After-sales Service. To prevent any damage, only remove the appliance from its polystyrene foam packaging at the time of installation.

PREPARING FOR INSTALLATION

⚠ WARNING: this is a heavy product; the hood should only be lifted and installed by two or more people.

The minimum distance between the support of the cooking pans on top of the cooker and the bottom of the hood must not be less than 50 cm for electric cookers and 65 cm for gas or mixed cookers. Before installation also check the minimum distances stated in the manual of the cooker.
If the installation instructions for the cooker specify a greater distance between cooker and hood, this distance must be observed.

ELECTRICAL CONNECTION

Make sure the power voltage specified on the appliance rating plate is the same as the mains voltage.
This information may be found on the inside of the hood, under the grease filter.
Power cable replacement (type H05 VV-F 3 x 0,75 mm^2) must be carried out by a qualified electrician. Contact an authorized service centre.
If the hood is fitted with an electric plug, connect the plug to a socket complying with current regulations, located in an accessible place after installation. If no plug is fitted (direct wiring to the mains), or if the socket is not located in an accessible place, install a standardised double pole power switch that will enable complete isolation from the mains in case of category III overvoltage conditions, in accordance with installation rules.
If the cable is not fitted with a plug, connect the wires according to the following table:

GENERAL RECOMMENDATIONS

Before use
Remove cardboard protection pieces, protective film and adhesive labels from accessories. Check the appliance for any transport damage.

During use
To avoid any damage do not place any weights on the appliance. Do not expose the appliance to atmospheric agents.

SAFEGUARDING THE ENVIRONMENT

Disposal of packing
The packing material is 100% recyclable and is marked with the recycle symbol ♺. The various parts of the packing must therefore be disposed of responsibly and in full compliance with local authority regulations governing waste disposal.

Scrapping the product
- This appliance is marked in compliance with European Directive 2012/19/EU, Waste Electrical and Electronic Equipment (WEEE).
- By ensuring this product is disposed of correctly, you will help prevent potential negative consequences for the environment and human health, which could otherwise be caused by inappropriate waste handling of this product.
- The symbol  on the product or on the accompanying documentation indicates that it should not be treated as domestic waste but must be taken to an appropriate collection centre for the recycling of electrical and electronic equipment.

Scrapping of household appliances
- This appliance is manufactured with recyclable or reusable materials. Dispose of it in accordance with local waste disposal regulations. Before scrapping, cut off the power supply cable.
- For further information on the treatment, recovery and recycling of household electrical appliances, contact your competent local authority, the collection service for household waste or the store where you purchased the appliance

TROUBLESHOOTING GUIDE

The appliance does not work:
- Check for the presence of mains electrical power and if the appliance is connected to the electrical supply;
- Turn off the appliance and restart it to see if the fault persists.

The hood's suction level is not sufficient:
- Check the suction speed and adjust as necessary;
- Check that the filters are clean;
- Check the air vents for any obstructions.

The light does not work:
- Check the light bulb and replace if necessary;
- Check that the light bulb has been correctly fitted.

AFTER-SALES SERVICE

Before calling the After-sales Service:

1. See if you can solve the problem yourself with the help of the suggestions given in the "Troubleshooting guide".
2. Switch the appliance off and back on again it to see if the fault persists.

If after the above checks the fault still occurs, get in touch with the nearest After-sales Service.

Always specify:

- A brief description of the fault;
- The exact type and model of the appliance;
- The service number (number after the word "Service" on the rating plate), located on the inside of the appliance. The service number is also indicated on the guarantee booklet;
- Your full address;
- Your telephone number.

SERVICE 0000 000 00000

If any repairs are required, please contact an **authorised After-sales Service** (to guarantee that original spare parts will be used and repairs carried out correctly).

CLEANING

⚠ WARNING: **- Do not use steam cleaners.**
- Disconnect the appliance from the power supply

IMPORTANT: Do not use corrosive or abrasive detergents. If any of these products accidentally comes into contact with the appliance, clean it immediately with a damp cloth.

- Clean the surfaces with a damp cloth. If it is very dirty, add a few drops of washing up detergent to the water. Finish off with a dry cloth.

IMPORTANT: do not use abrasive sponges or metallic scrapers or scouring pads. Over time, these can ruin the enamel surface.

- Use detergents specifically designed for cleaning the appliance and follow the manufacturer instructions.

IMPORTANT: clean the filters at least monthly to remove any oil or grease residuals.

MAINTENANCE

⚠ WARNING: **- Use safety gloves.**
- Disconnect the appliance from the power supply.

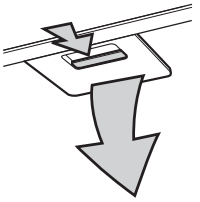

GREASE FILTERS.

The metal grease filter has unlimited duration. It should be washed at least once a month, either by hand, or by placing it in the dishwasher (use a short cycle and low temperature). If washed in the dishwasher, the grease filter surface may become matt. This will not cause any reduction of performance.
To remove the filter pull out the handle.
After the filter has been washed and dried, replace following the inverse procedure.

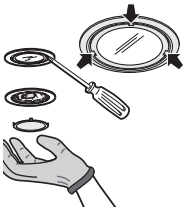

REPLACING THE ALOGEN LAMPS.

1. Disconnect the hood from the electric power supply.
2. Insert the blade of a small flat screwdriver where indicated by the three points, and with a gentle pressure lift the cover from its position.
3. Remove the faulty light bulb and replace with a new one.

Lamp	Power (W)	Socket	Voltage (V)	Dimension (mm)	ILCOS D Code (according IEC 61231)
	20	G4	12	10 (Diameter) 22(Light Center Length)	HSGST/C/UB-20-12-G4-10/22

4. Replace the cover (spring lock).

ACTIVE CARBON FILTER
(filter models only):
The carbon filter must be washed once a month in the dishwasher at the highest possible temperature using a standard dishwasher detergent. It is recommended that nothing else is placed in the dishwasher when washing the filter.
After washing, the carbon filter must be reactivated by placing it in the oven at a temperature of 100°C for 10 minutes.
Replace the carbon filter every 3 years.

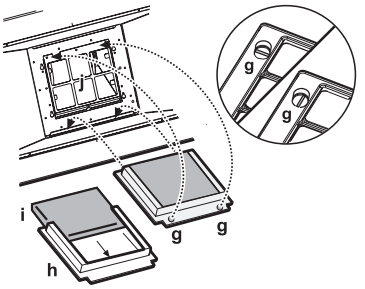

Fitting the carbon filter:
1. Remove the grease filter.
2. Remove the filter holding frame by turning the **"g"** knobs 90°.
3. Fit the **"i"** carbon filter inside the filter holder **"h"**.

To refit the filter holder and the grease filter follow the inverse procedure.

MATERIAL SUPPLIED

Remove all the components from the packets. Check that all the components are included.
- Hood assembled with motor, lamps and grease filters installed.
- 1 pre-assembled truss
- 1 filter connector with extension
- Instructions for assembly and use#
- 1 connection ring
- 1 electrical cable
- 1 cable clamp
- 1 assembly template
- 1 support bracket
- Screws and wall plugs
- Magnetic strips

INSTALLATION - PRELIMINARY ASSEMBLY INSTRUCTIONS

The hood is designed for installation and use in "Extractor version" or in "Filter version".

Note: The model with electric shutter can only be used in "Extractor version" and the exhaust pipe must be connected to a peripheral extraction unit.

Extractor Version
Fumes are extracted and expelled to the outside through an exhaust pipe (not supplied) fixed to the hood exhaust pipe connector.
Depending on the exhaust pipe purchased, provide for suitable fixing to the exhaust pipe connector.

IMPORTANT: If already installed, remove the carbon filter/s.

Filter Version
Air is filtered through the carbon filter/s and recycled into the surrounding environment.

IMPORTANT: check that air recirculation is facilitated.
If the hood does not have a carbon filter/s, order one/them and fit it/them before use.

Install the hood away from very dirty locations, windows, doors and sources of heat.
The hood comes supplied with all the materials required for installation on most walls/ceilings. However, a qualified technician is needed to make sure that the plugs are suitable for your ceiling.

INSTALLATION - ASSEMBLY INSTRUCTIONS

The instructions below, to be carried out in the order in which they are numbered, refer to the figures (with the same step numbers) given on the last pages of this manual.

1. **IMPORTANT:**Work out the exact position where the hood is to be installed:
   R1 = Middle of installation point and opening for the exhaust pipe.
   FRONT = The side at the front of the hood.
   LFT: left side of the hood.
   RHT: right side of the hood.
   N.B.: the same wording appears on numerous drawings to make it easier to understand the assembly instructions.
2. Place the template on the ceiling, taking into account the above-mentioned reference points and making sure the arrows stamped on the template correspond with the front part of the hood (FRONT). Drill the number of holes of diameter as indicated.
   Insert the wall plugs provided.
3. **Half-tighten the screws as indicated (at corners), as these will be needed to fix the truss to the hood.**
   For Extractor Version only: Make an opening in the ceiling for the exhaust pipe.
4. Remove and set aside the screw securing the truss sections.
5. **IMPORTANT:** Adjust the extension of the truss, bearing in mind the following mathematical formula:
   H (cm) = (X-Y-M)+10.5
   H = Extension of truss to be calculated
   X = Distance from ceiling to hob.
   Y = Minimum distance from the hobb to burners on hob (65cm gas hobs, 50cm electric hobs).
   M = Height of motor unit from hood.
6. Fix the two sections of the truss using the screws as illustrated.
7. ***For Extractor Version only:*** fit an exhaust pipe to extract fumes and carry them to the outside.
   This pipe must exit through the ceiling at a height as indicated in the drawing.
   N.B.: H = Calculated truss extension (see assembly sequence 5)
   N.B.: the exhaust pipe is not included in the packaging.
8. Remove the adhesive tape holding the control electronics box to the motor body.
   N.B.: the figure is indicative only, the box may be temporarily fixed to other sides of the motor body.
9. Fix the collar to the exhaust opening.
10. Lift the box as shown.
11. Fully tighten the screws fixing the box to the motor body.
    N.B.: there are two types of box, either front or rear-fixing. Follow the instructions in the figures (11a or 11b) depending on the model you have purchased).
12. Slide the power supply cable into its housing (12a or 12b)
13. Secure the cable with a cable clamp.
    IMPORTANT: It is essential to carry out this operation. in order to avoid accidental disconnection of the cable.
14. Fix the truss to the hood using the screws as shown.
15. **IMPORTANT:** Attach the hood to the ceiling and fully tighten the screws.
16. **IMPORTANT:** Insert and tighten 2 screws (1 on each side) - these are OBLIGATORY safety anchors.
17. Fix the exhaust pipe to the connecting ring.
    N.B.: the anchor band is not included in the packaging.
    Carry out the electrical connection to the mains power supply
18. ***For Filter Version*** only: Attach the deflector.
    N.B.: the deflector comes in 3 pieces and must be assembled to size.
19. Depending on the stability of the truss, decide if the upper support bracket should be fitted (with the screws as indicated).
    N.B.: If the minimum extension was used, the bracket won't be necessary.
    N.B.: We recommend placing the bracket at equal distances from the ceiling and the lower bracket welded to the truss
20. Cut 2 magnetic strips to size and attach them to the inside of one of the two upper sections of the flue, as shown in the figure.
21. Assemble the upper sections of the flue to cover the truss. Secure the upper flue to the truss using screws, as shown in the figure.
22. Cut 2 magnetic strips to size and attach them to the inside of one of the two lower sections of the flue, as shown in the figure.
23. Assemble the lower sections of the flue to cover the truss.
24. Fit the flues in their seat over the hood and completely covering it.
25. Remove the grease filter/s.
26. Secure the lower sections of the flues from inside the hood, using the screws as shown.
27. ***For Filter Version only:*** Fit the carbon filter
    N.B.: Some models may already have a carbon filter (installed and supplied with the appliance); if not, it must be ordered separately.
    N.B.: The upper tabs should be cut to size.
28. Install the grease filter(s).

Check for correct hood operation, referring to the section describing the hood and how to use it.

DESCRIPTION AND USE OF HOOD

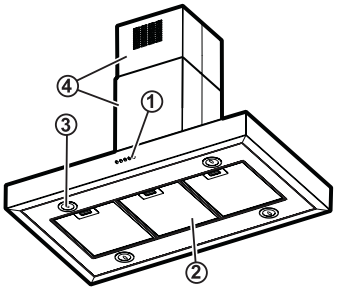

1. Control panel.
2. Grease filters.
3. Halogen lamps.
4. Telescopic flue.

Control panel

a. Light switch
b. Extraction and minimum extraction (exhaust) speed ON/OFF switch
c. Average speed (extraction power) selector
d. Maximum speed (extraction power) switch

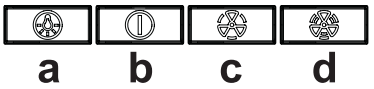

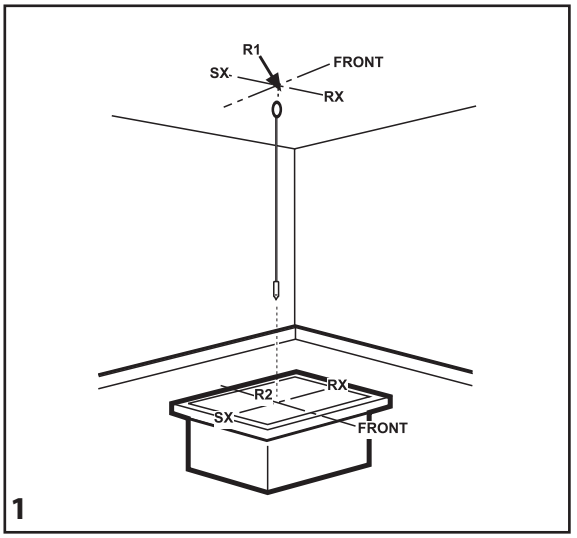
R1
FRONT
SX
RX
R2
RX
SX
FRONT
1

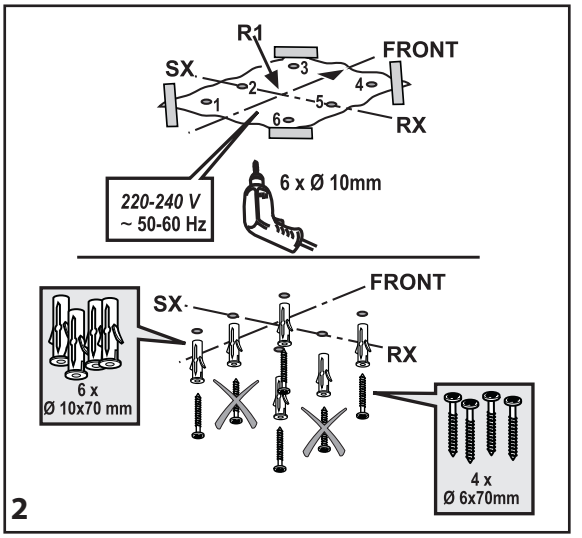
R1
FRONT
SX
1
2
3
4
5
6
RX
220-240 V
~ 50-60 Hz
6 x Ø 10mm
FRONT
SX
RX
6 x
Ø 10x70 mm
4 x
Ø 6x70mm
2

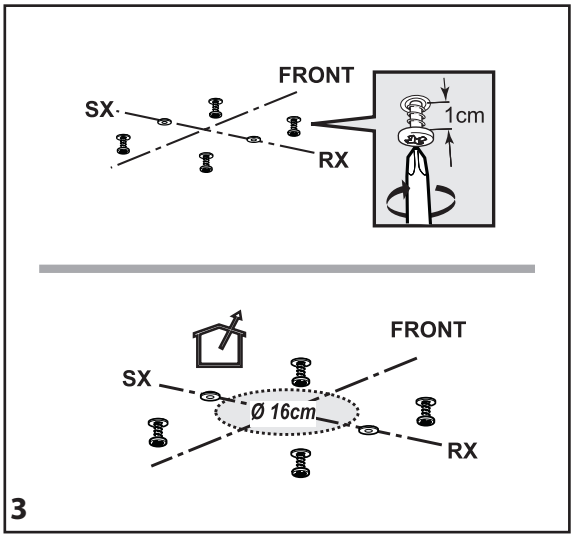
FRONT
SX
RX
1cm
FRONT
SX
Ø 16cm
RX
3

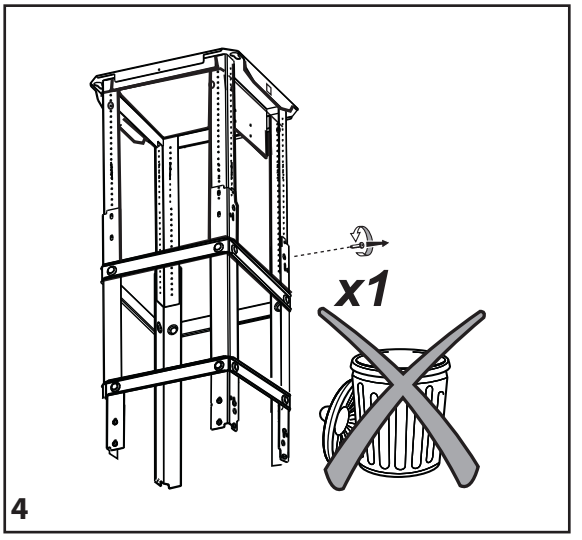
x1
4

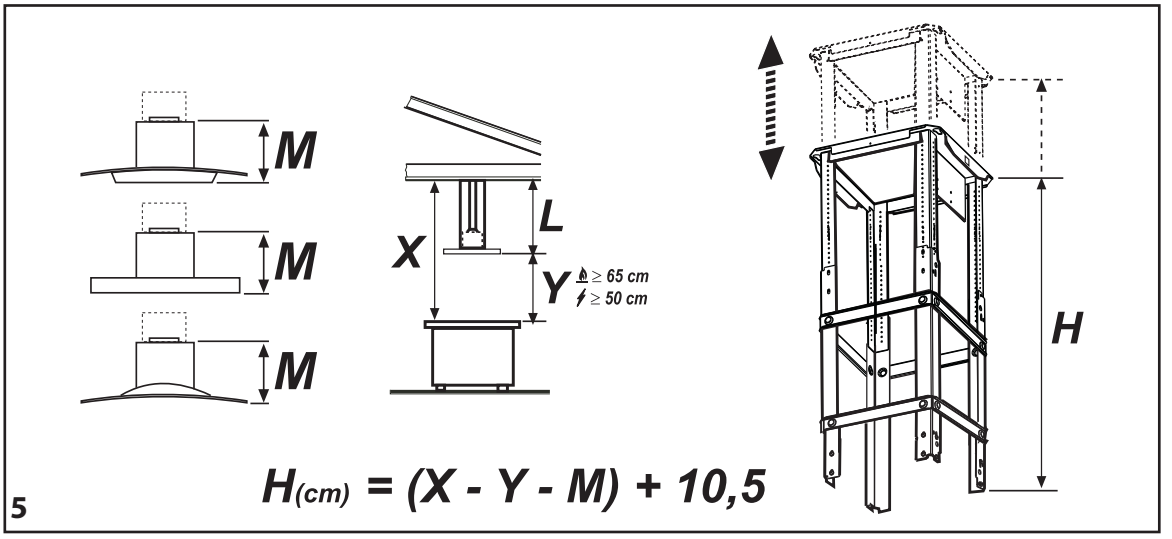
M
M
M
X
L
Y
≥ 65 cm
≥ 50 cm
H
5

$$H_{(cm)} = (X - Y - M) + 10,5$$

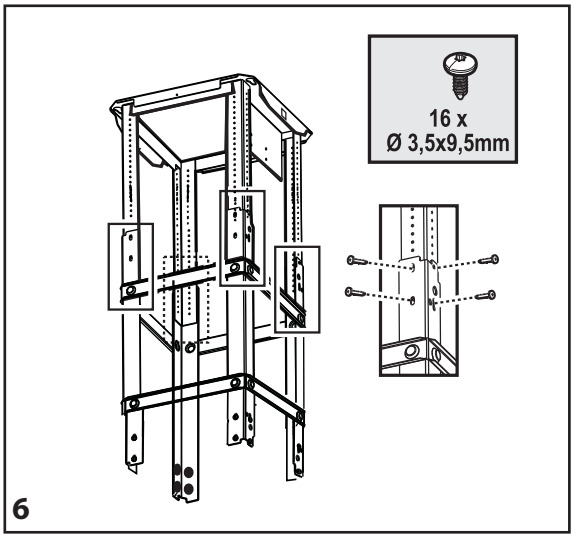

6

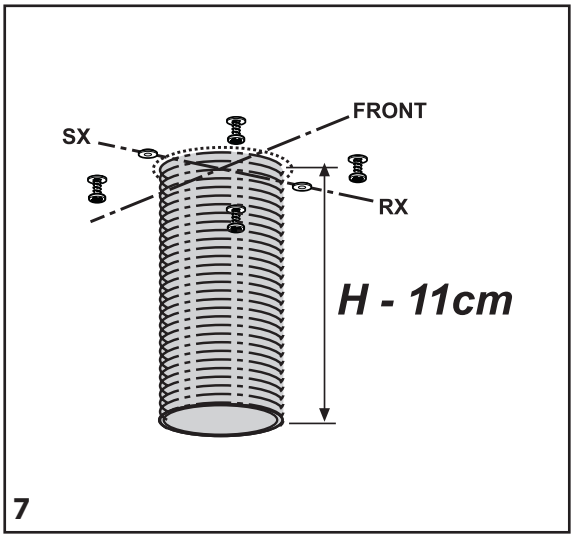

7

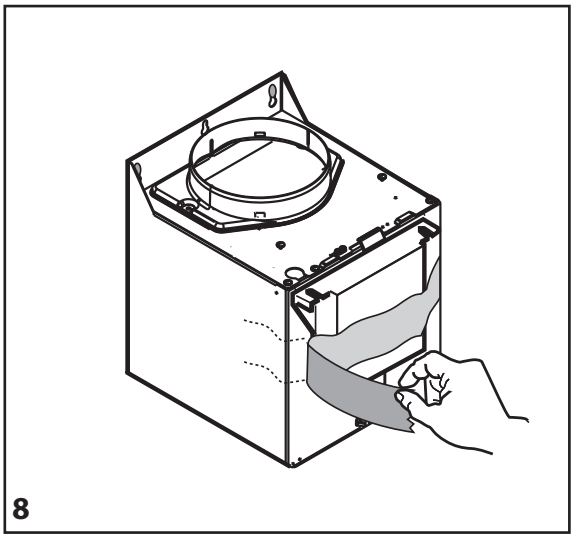

8

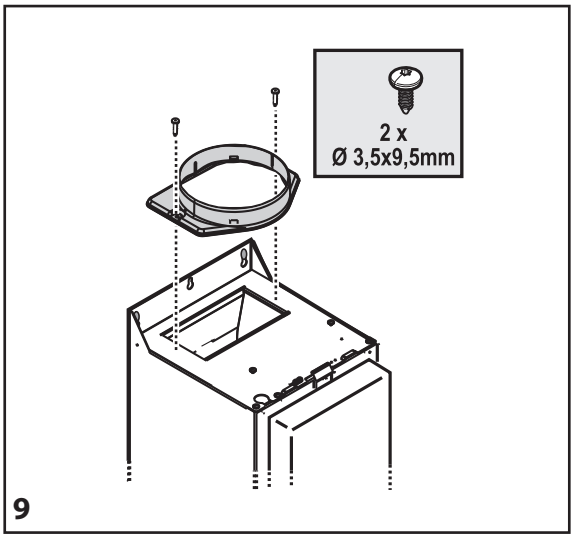

9

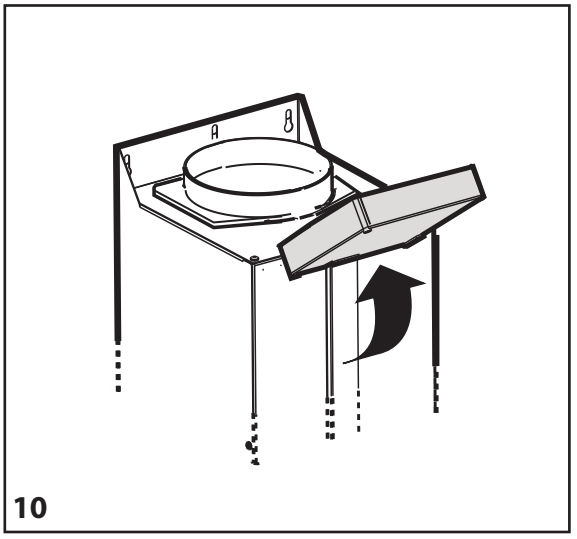

10

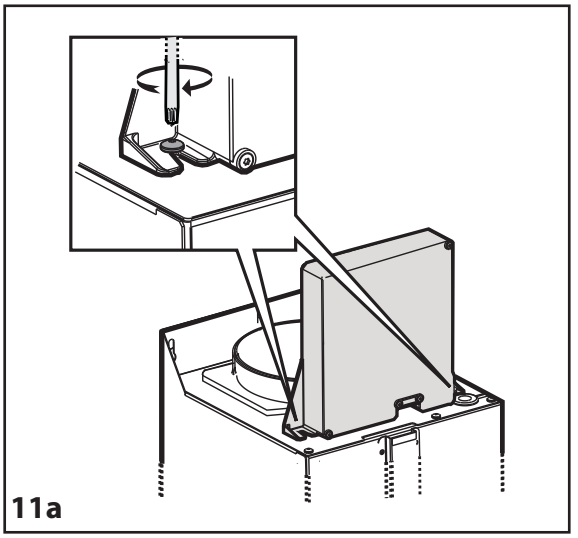

11a

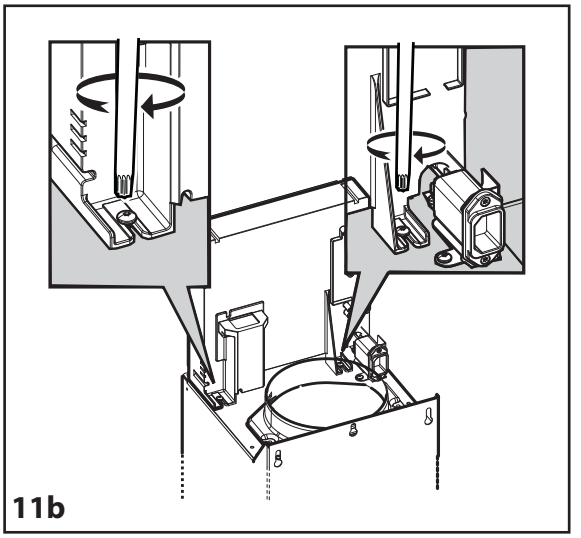

11b

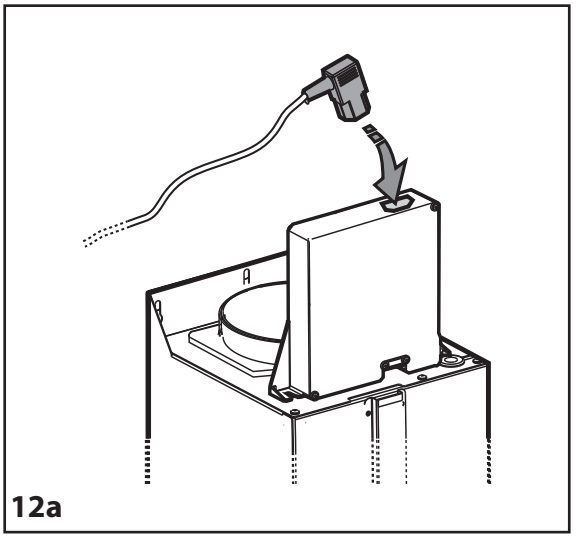

12a

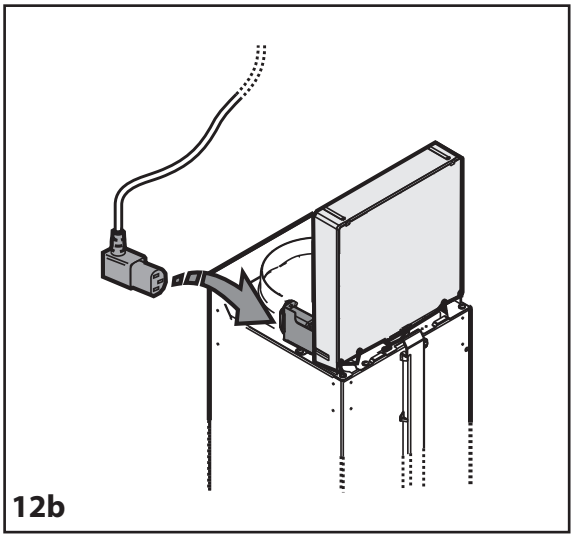

12b

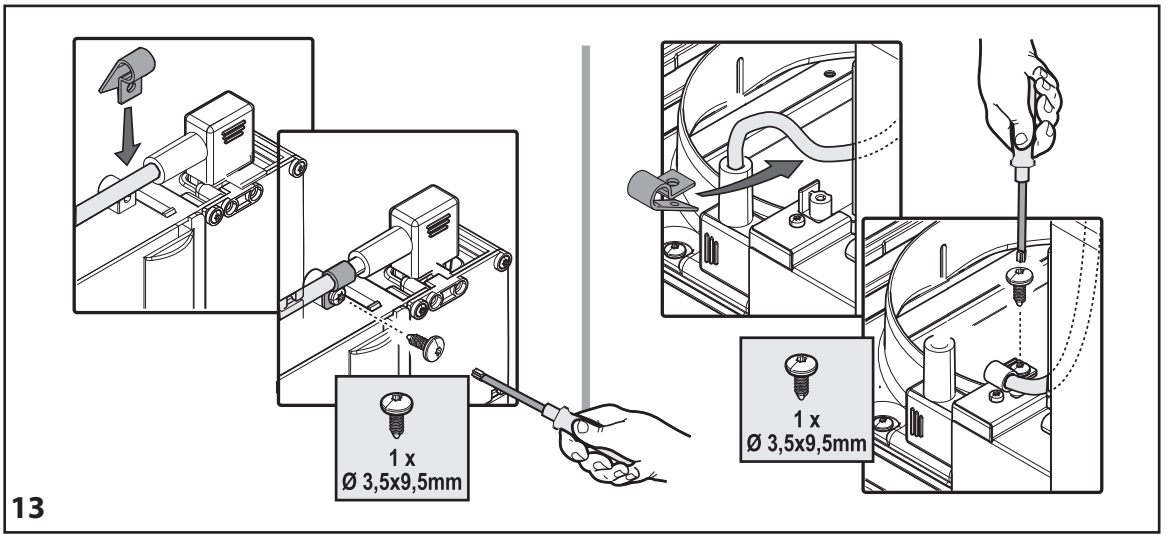

13

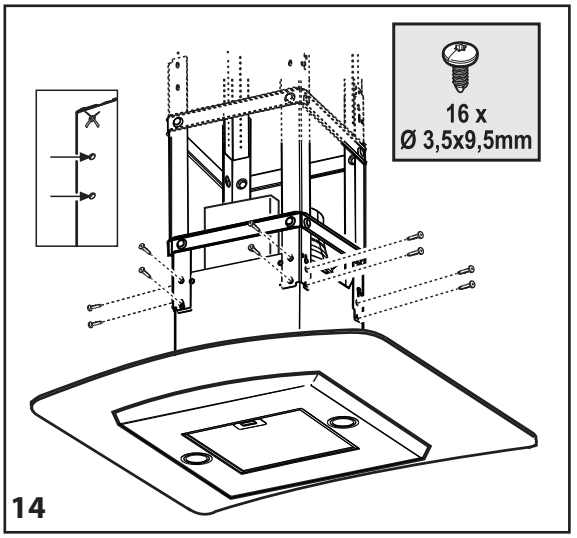
16 x
Ø 3,5x9,5mm
14

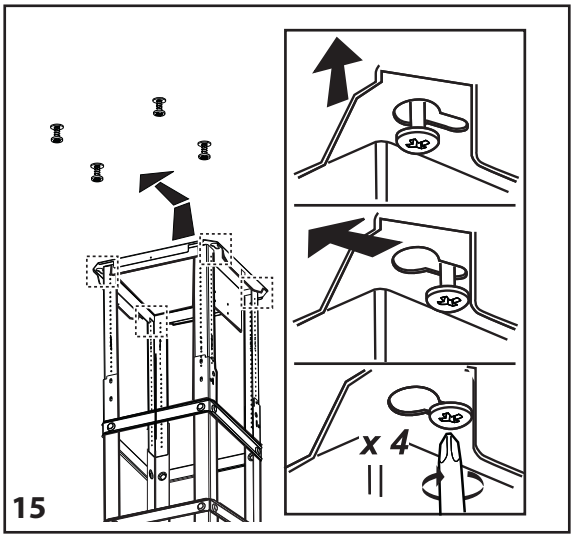
x 4
15

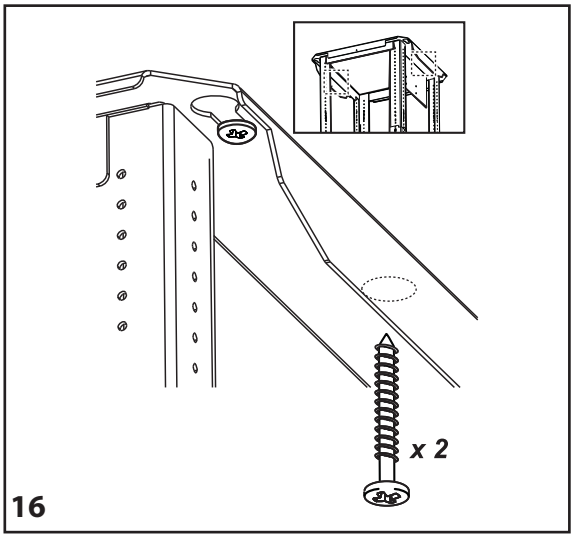
x 2
16

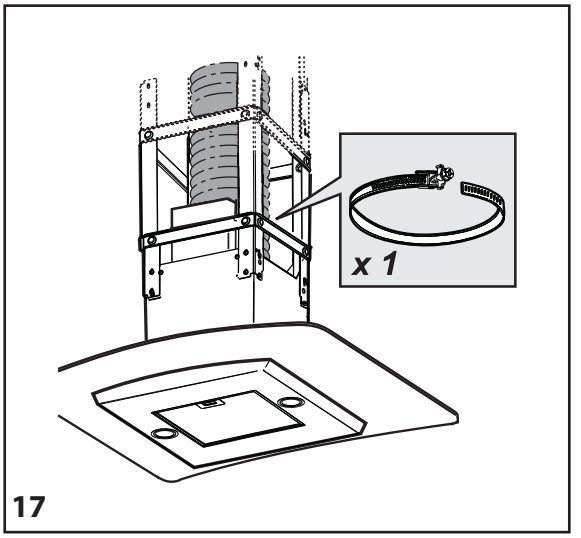
x 1
17

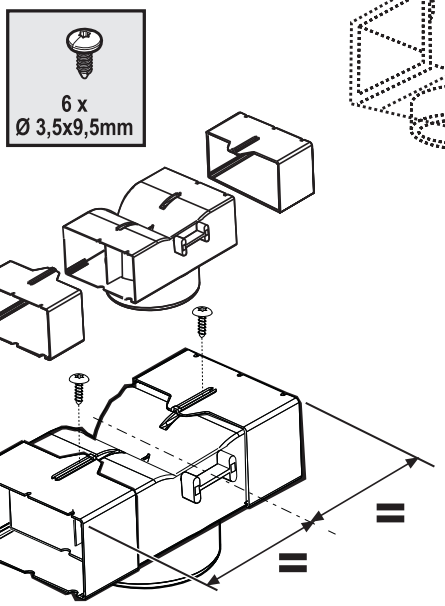

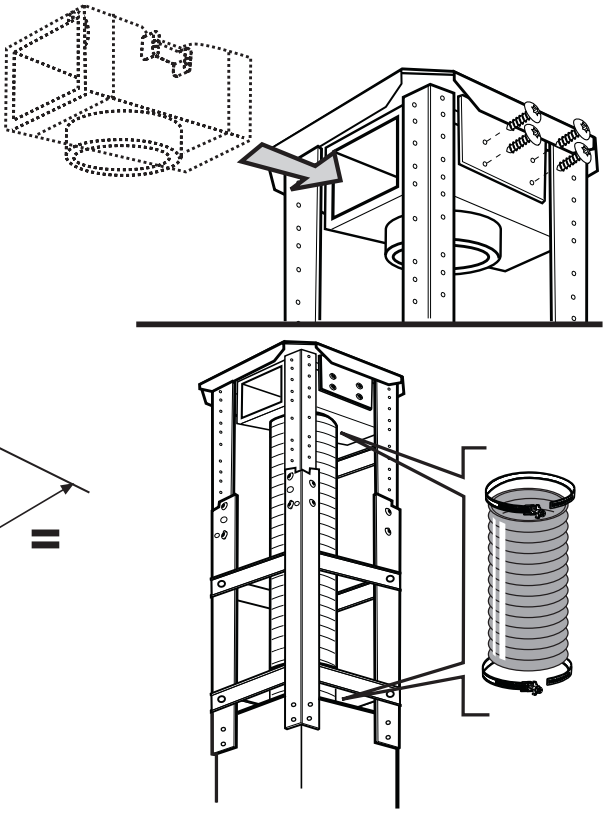

18

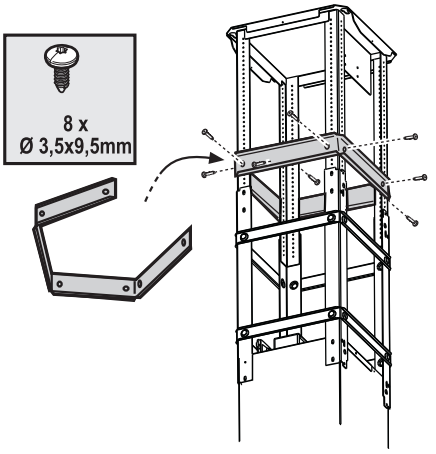

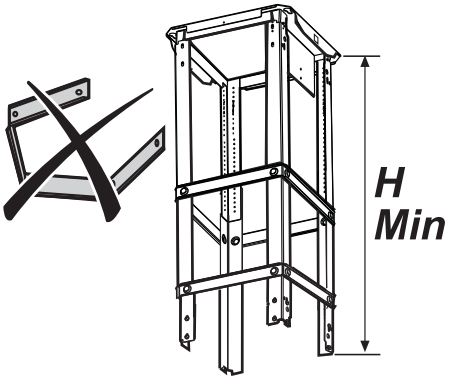

19

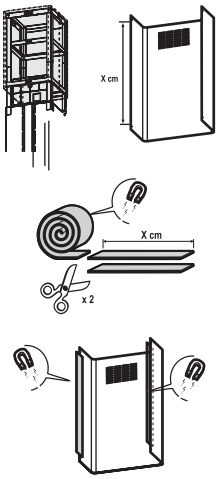

20

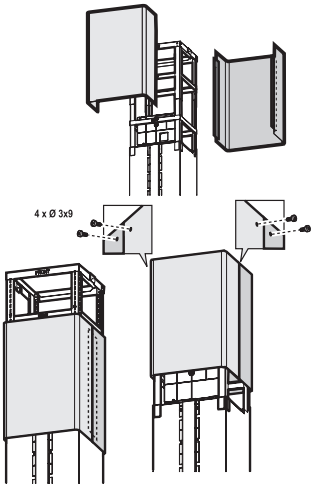

21

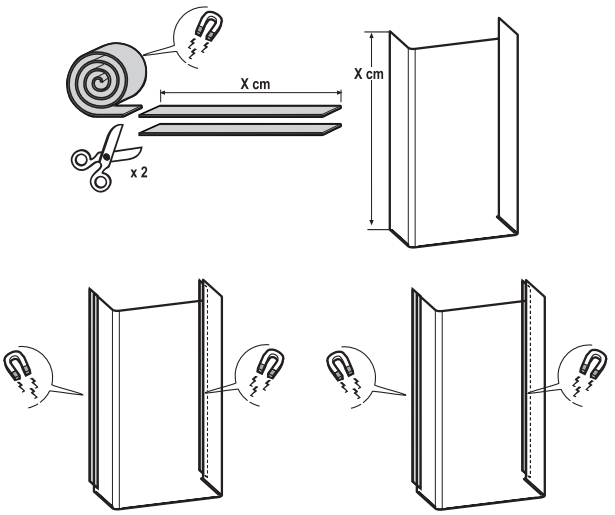

22

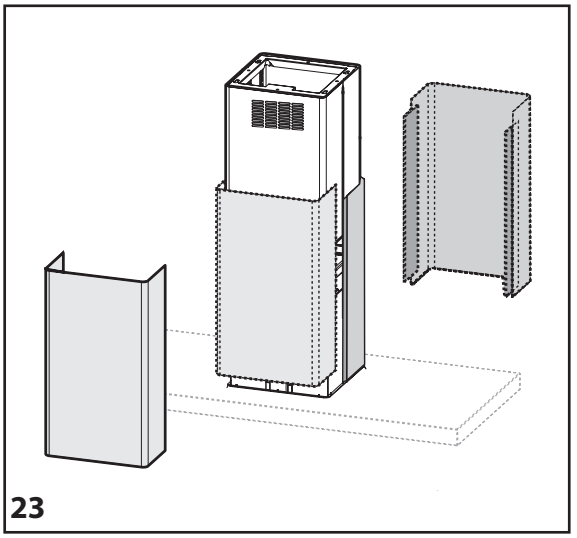

23

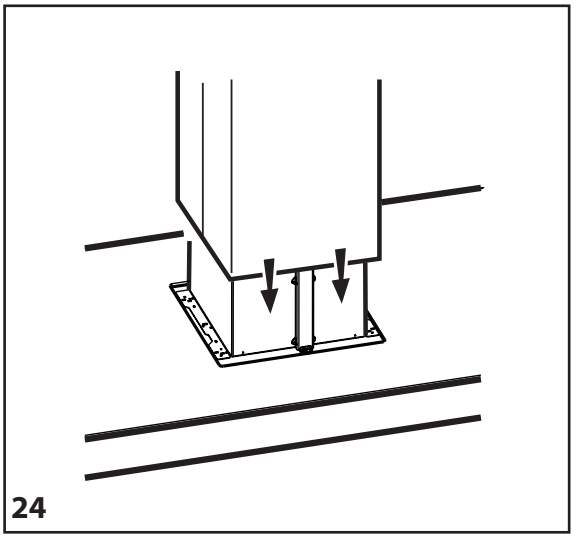

24

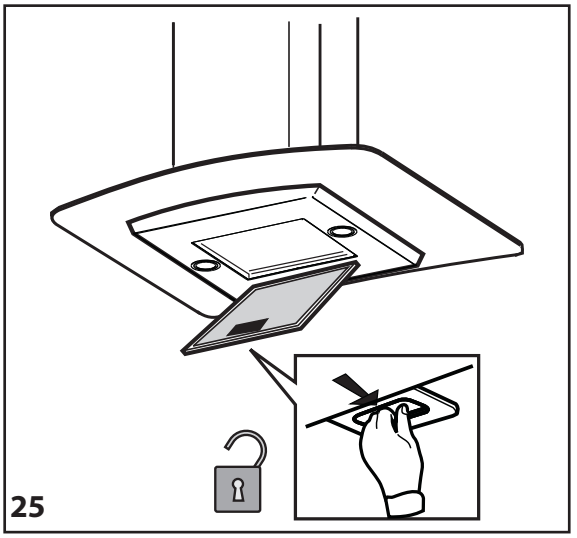

25

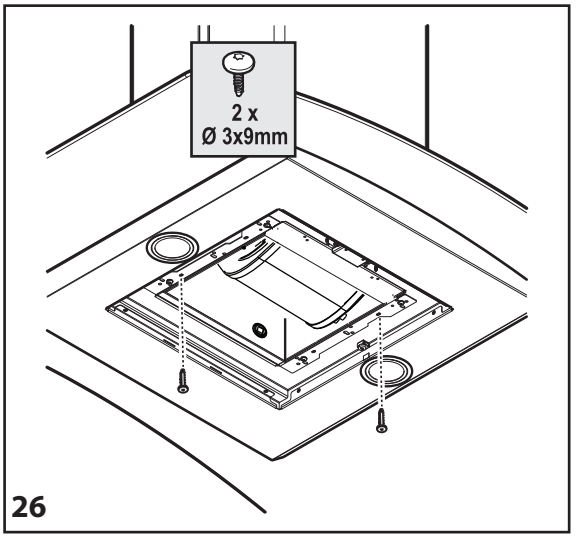

26

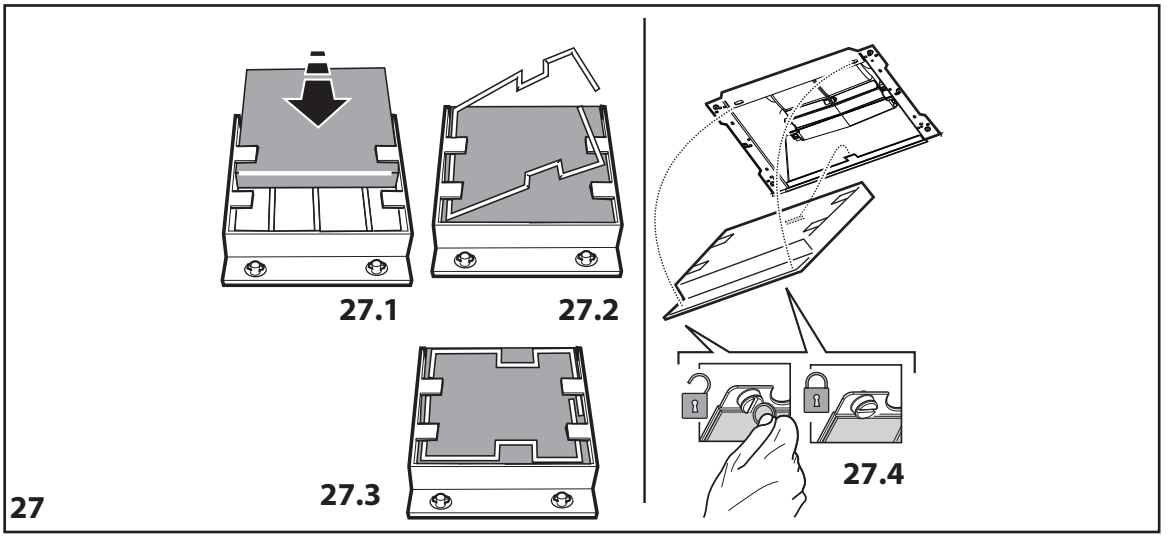

27

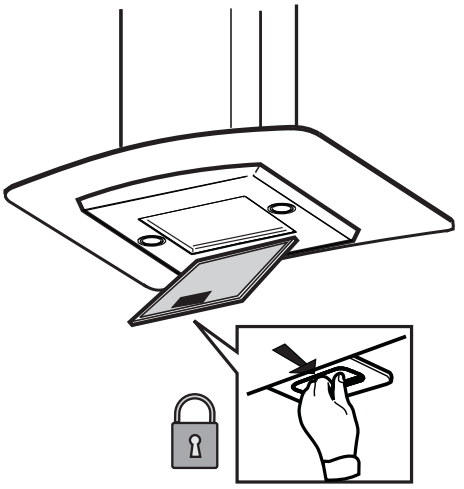

28

Printed in Italy
04/2017



400011115936

