PHILIPS

Lighting



CorePro LEDspot LV

CorePro LED spot ND 8-50W MR16 827 36D

CorePro LEDspots are a perfect fit for spot lighting and deliver warm halogen-like light. They are compatible with most existing fixtures with MR16 GU5.3 holders and are designed as a retrofit replacement for halogen or incandescent spots. CorePro LEDspots deliver huge energy savings and minimize maintenance cost.

Product data

General Information	
Cap-Base	GU5.3 [GU5.3]
Nominal Lifetime (Nom)	15000 h
Switching Cycle	50000X
Technical Type	8-50W

Light Technical	
Color Code	827 [CCT of 2700K]
Beam Angle (Nom)	36 °
Luminous Flux (Nom)	621 lm
Luminous Flux (Rated) (Nom)	621 lm
Luminous Intensity (Nom)	1100 cd
Color Designation	Warm White (WW)
Rated Beam Angle	36 °
Correlated Color Temperature (Nom)	2700 K
Luminous Efficacy (Rated) (Nom)	77.63 lm/W
Color Consistency	<6
Color Rendering Index (Nom)	80
LLMF At End Of Nominal Lifetime (Nom)	70 %
Luminous Flux in 90° Cone (Rated)	621 lm

Operating and Electrical	
Power (Rated) (Nom)	8 W
Lamp Current (Nom)	660 mA
Wattage Equivalent	50 W
Starting Time (Nom)	0.5 s
Warm Up Time to 60% Light (Nom)	0.5 s
Power Factor (Nom)	0.85
Voltage (Nom)	12 V

Temperature	
T-Case Maximum (Nom)	90 °C

Controls and Dimming	
Dimmable	No

Approval and Application	
Suitable For Accent Lighting	Yes
Energy Efficiency Label (EEL)	A+
Energy Consumption kWh/1000 h	9 kWh

Product Data	
Full product code	871869671067800

CorePro LEDspot LV

Order product name	CorePro LED spot ND 8-50W MR16 827 36D
EAN/UPC - Product	8718696710678
Order code	929001344902
Numerator - Quantity Per Pack	1
Numerator - Packs per outer box	10

Material Nr. (12NC)	929001344902
Net Weight (Piece)	0.045 kg

Dimensional drawing

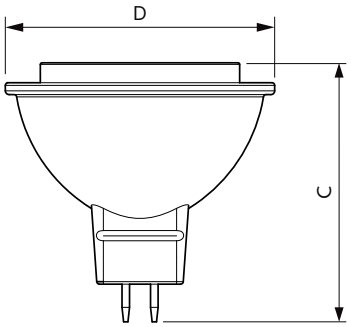

Product	D	C
CorePro LED spot ND 8-50W MR16 827 36D	51 mm	50 mm

MR16 12V ACV 8-50W 621lm 36D 2700K ND

Photometric data

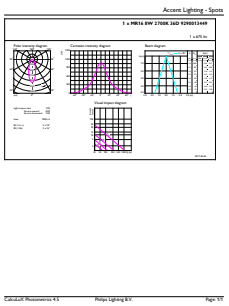

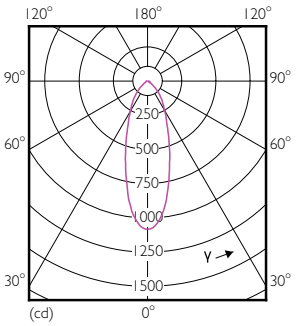

CorePro LEDspotLV 50W GU5-3 827 36D

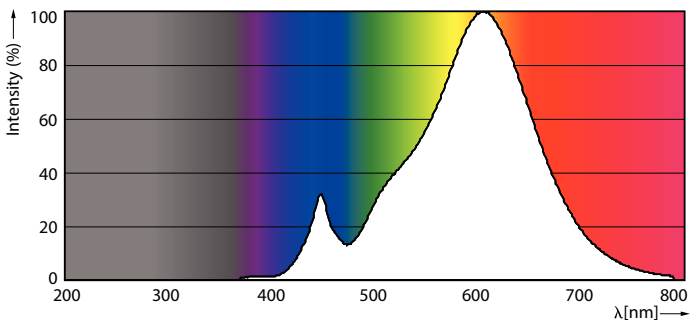

CorePro LEDspotLV 50W GU5-3 827 36D

CorePro LEDspot LV

Lifetime

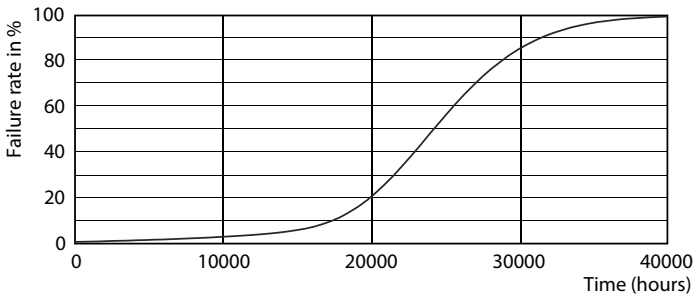

CorePro LEDspotLV 20W GU5-3 827 36D

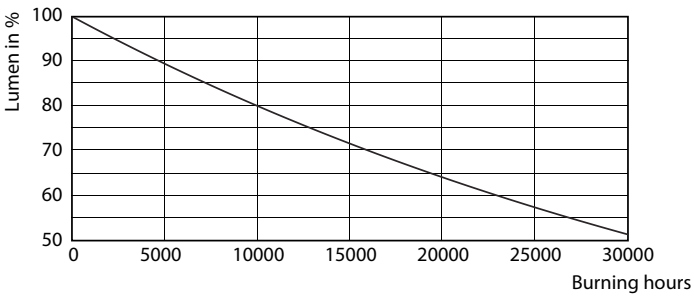

CorePro LEDspotLV 20W GU5-3 827 36D

© 2017 Philips Lighting Holding B.V. All rights reserved. Philips Lighting reserves the right to make changes in specifications and/or to discontinue any product at any timewithout notice or obligation and will not be liable for any consequences resulting from the use of this publication.