PHILIPS

Lighting



MASTER VALUE LEDsp ot LV

MAS LED spot VLE D 5.5-35W MR16 827 36D

Philips MASTER VALUE MR16 is the series of Low Voltage (12VAC) Halogen MR16 replacements. Not only does it employs Philips' patented solution to guarantee the broadest possible compatibility with standard 12V Halogen electronic transformers. It also delivers beam intensity which is equivalent to the 50W Philips Halogen MR16 lamps. The form-factor of Philips MASTER Value LED MR16 guarantees a 100% form on the back-side of the lamp (exact form with Halogen lamps.)

Product data

General Information	
Cap-Base	GU5.3 [GU5.3]
Nominal Lifetime (Nom)	25000 h
Switching Cycle	50000X
Technical Type	5.5-35W

Light Technical	
Color Code	827 [CCT of 2700K]
Beam Angle (Nom)	36 °
Luminous Flux (Nom)	450 lm
Luminous Flux (Rated) (Nom)	450 lm
Luminous Intensity (Nom)	1000 cd
Color Designation	Warm White (WW)
Rated Beam Angle	36 °
Correlated Color Temperature (Nom)	2700 K
Luminous Efficacy (Rated) (Nom)	81.82 lm/W
Color Consistency	<6
Color Rendering Index (Nom)	80
LLMF At End Of Nominal Lifetime (Nom)	70 %
Luminous Flux in 90° Cone (Rated)	450 lm

Operating and Electrical	
Power (Rated) (Nom)	5.5 W
Lamp Current (Nom)	630 mA
Wattage Equivalent	35 W
Starting Time (Nom)	0.5 s
Warm Up Time to 60% Light (Nom)	0.5 s
Power Factor (Nom)	0.8
Voltage (Nom)	ac Electronic 12 V

Temperature	
T-Case Maximum (Nom)	95 °C

MASTER VALUE LEDspot LV

Controls and Dimming	
Dimmable	Yes

Approval and Application	
Suitable For Accent Lighting	Yes
Energy Efficiency Label (EEL)	A+
Energy Consumption kWh/1000 h	7 kWh

Product Data	
Full product code	871869670823100

Order product name	MAS LED spot VLE D 5.5-35W MR16 827 36D
EAN/UPC - Product	8718696708231
Order code	929001325902
Numerator - Quantity Per Pack	1
Numerator - Packs per outer box	10
Material Nr. (12NC)	929001325902
Net Weight (Piece)	0.045 kg

Warnings and Safety

- Operating temperature range is between -20° C and 45° C ambient
- Only to apply in dry or damp locations and most of open fixtures with lamp-holders that offer sufficient space (10 mm free air space)
- Not intended for use with emergency light fixtures or exit lights

Dimensional drawing

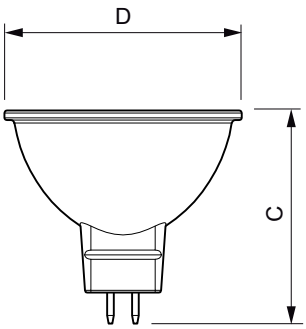

MR16 12V 5W-35W 380lm 36D 2700K GU5.3 D

Product	D	C
MAS LED spot VLE D 5.5-35W MR16 827 36D	50.5 mm	45 mm

Photometric data

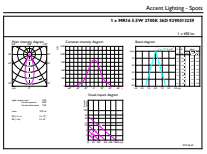

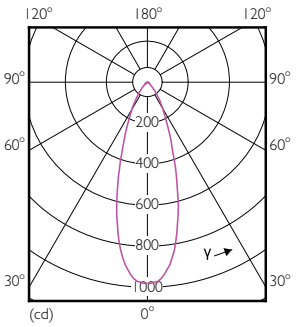

MAS VLE LEDspotLV 35W GU5-3 827 36D MR16

MASTER VALUE LEDspot LV

Photometric data

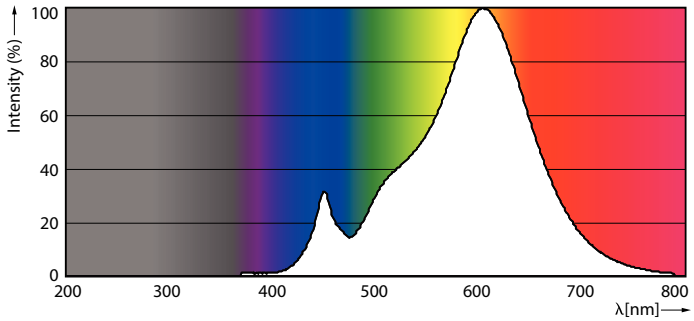

MAS VLE LEDspotLV 35W GU5-3 827 36D MR16

Lifetime

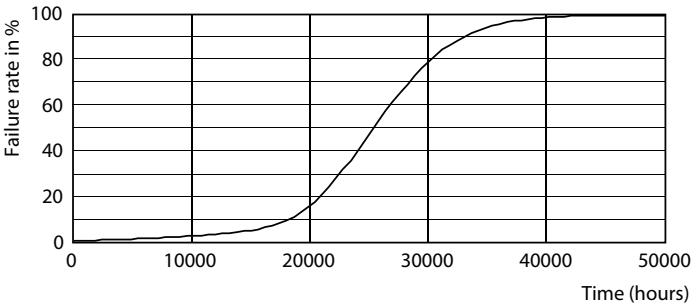

MAS VLE LEDspotLV 35W GU5-3 827 36D MR16

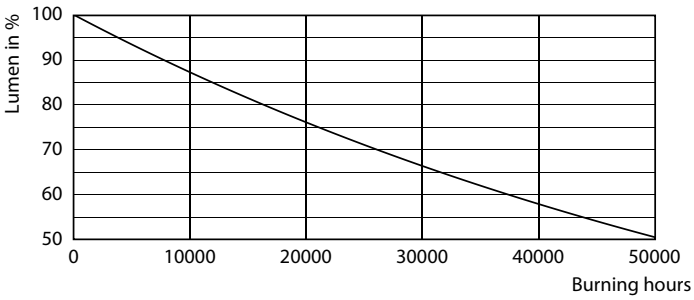

MAS VLE LEDspotLV 35W GU5-3 827 36D MR16

© 2017 Philips Lighting Holding B.V. All rights reserved. Philips Lighting reserves the right to make changes in specifications and/or to discontinue any product at any timewithout notice or obligation and will not be liable for any consequences resulting from the use of this publication.