

MASTER LEDspot PAR

MAS LEDspot CLA D 9.5-75W 827 PAR30S 25D

With its robust design and warm-white beam of light, these new-generation PAR lamps are ideal for general lighting and spot lighting in the hospitality industry. There is a choice of dimmable and non-dimmable versions. They are especially suitable for public areas such as lobbies, corridors, stairwells, where the light is always on.

Product data

General Information	
Cap-Base	E27 [E27]
Nominal Lifetime (Nom)	25000 h
Switching Cycle	25000X
Technical Type	9.5-75W

Light Technical	
Color Code	827 [CCT of 2700K]
Beam Angle (Nom)	25 °
Luminous Flux (Nom)	740 lm
Luminous Flux (Rated) (Nom)	740 lm
Luminous Intensity (Nom)	3500 cd
Color Designation	Warm White (WW)
Rated Beam Angle	25 °
Correlated Color Temperature (Nom)	2700 K
Luminous Efficacy (Rated) (Nom)	83.16 lm/W
Color Consistency	<6
Color Rendering Index (Nom)	80
LLMF At End Of Nominal Lifetime (Nom)	70 %
Luminous Flux in 90° Cone (Rated)	740 lm

Operating and Electrical	
Input Frequency	50 Hz
Power (Rated) (Nom)	9.5 W
Lamp Current (Nom)	48 mA
Wattage Equivalent	75 W
Starting Time (Nom)	0.5 s
Warm Up Time to 60% Light (Nom)	0.5 s
Power Factor (Nom)	0.85
Voltage (Nom)	220-240 V

Controls and Dimming	
Dimmable	Yes

Approval and Application	
Suitable For Accent Lighting	Yes
Energy Efficiency Label (EEL)	A+
Energy Consumption kWh/1000 h	10 kWh

Product Data	
Full product code	871869671380800
Order product name	MAS LEDspot CLA D 9.5-75W 827 PAR30S 25D
EAN/UPC - Product	8718696713808

MASTER LEDspot PAR

Order code	929001322902
Numerator - Quantity Per Pack	1
Numerator - Packs per outer box	6
Material Nr. (12NC)	929001322902

Net Weight (Piece)	0.230 kg

Dimensional drawing

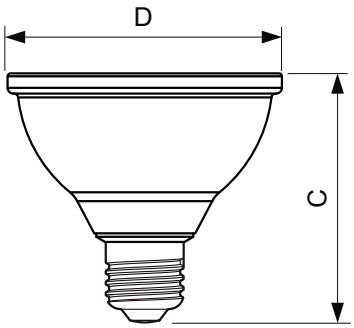

PAR30s 220-240V 9-75W 2700K E27 D

Product	D	C
MAS LEDspot CLA D 9.5-75W 827 PAR30S 25D	95 mm	86 mm

Photometric data

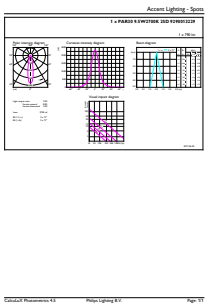

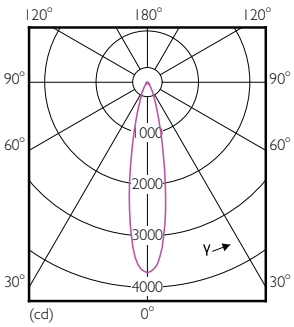

MASTER LEDspot PAR 75W E27 827 25D

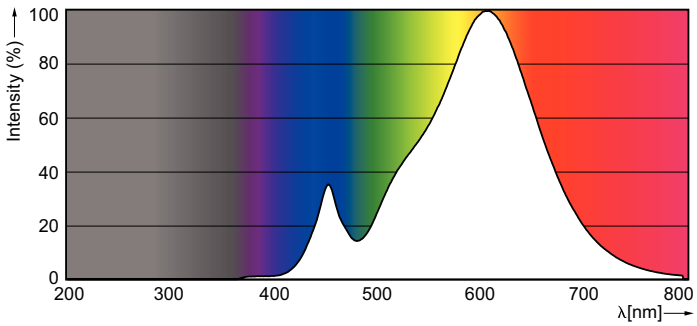

VLE 3.4-20W GU5.3 827 MR16

MASTER LEDspot PAR

Lifetime

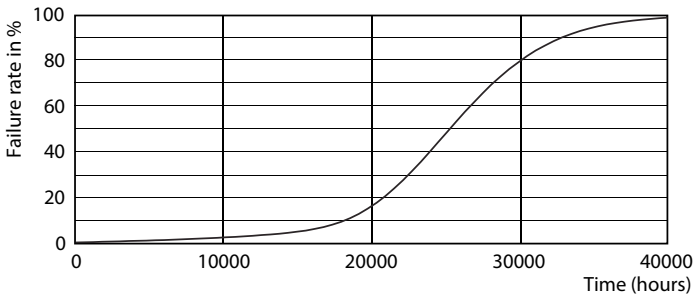

MASTER LEDspot PAR 50W E27 827 25D

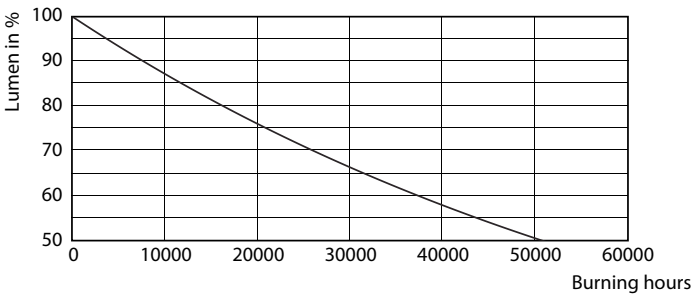

MASTER LEDspot PAR 50W E27 827 25D

© 2017 Philips Lighting Holding B.V. All rights reserved. Philips Lighting reserves the right to make changes in specifications and/or to discontinue any product at any timewithout notice or obligation and will not be liable for any consequences resulting from the use of this publication.