

MASTER LEDspot PAR

MAS LEDspot CLA D 9.5-75W 840 PAR30S 25D

With its robust design and warm-white beam of light, these new-generation PAR lamps are ideal for general lighting and spot lighting in the hospitality industry. There is a choice of dimmable and non-dimmable versions. They are especially suitable for public areas such as lobbies, corridors, stairwells, where the light is always on.

Product data

General Information	
Cap-Base	E27 [E27]
Nominal Lifetime (Nom)	25000 h
Switching Cycle	25000X
Technical Type	9.5-75W

Light Technical	
Color Code	840 [CCT of 4000K]
Beam Angle (Nom)	25 °
Luminous Flux (Nom)	820 lm
Luminous Flux (Rated) (Nom)	820 lm
Luminous Intensity (Nom)	3500 cd
Color Designation	Cool White (CW)
Rated Beam Angle	25 °
Correlated Color Temperature (Nom)	4000 K
Luminous Efficacy (Rated) (Nom)	92.63 lm/W
Color Consistency	<6
Color Rendering Index (Nom)	80
LLMF At End Of Nominal Lifetime (Nom)	70 %
Luminous Flux in 90° Cone (Rated)	820 lm

Operating and Electrical	
Input Frequency	50 Hz
Power (Rated) (Nom)	9.5 W
Lamp Current (Nom)	48 mA
Wattage Equivalent	75 W
Starting Time (Nom)	0.5 s
Warm Up Time to 60% Light (Nom)	0.5 s
Power Factor (Nom)	0.85
Voltage (Nom)	220-240 V

Controls and Dimming	
Dimmable	Yes

Approval and Application	
Suitable For Accent Lighting	Yes
Energy Efficiency Label (EEL)	A+
Energy Consumption kWh/1000 h	10 kWh

Product Data	
Full product code	871869671384600
Order product name	MAS LEDspot CLA D 9.5-75W 840 PAR30S 25D
EAN/UPC - Product	8718696713846

MASTER LEDspot PAR

Order code	929001323002
Numerator - Quantity Per Pack	1
Numerator - Packs per outer box	6
Material Nr. (12NC)	929001323002

Net Weight (Piece)	0.230 kg

Dimensional drawing

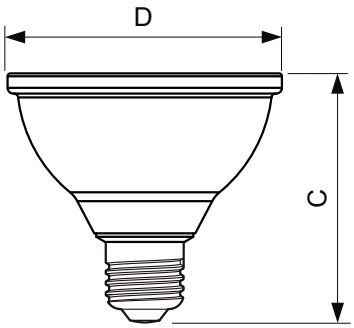

PAR30s 220-240V 9-75W 4000K E27 D

Product	D	C
MAS LEDspot CLA D 9.5-75W 840 PAR30S 25D	95 mm	86 mm

Photometric data

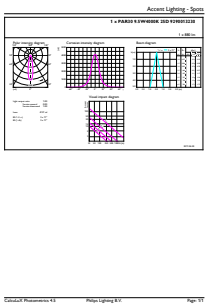

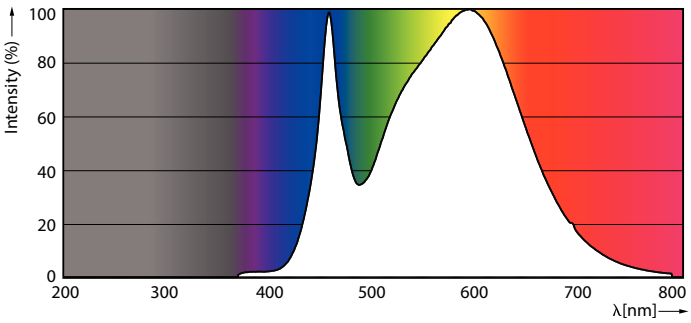

MASTER LEDspot PAR 75W E27 840 25D

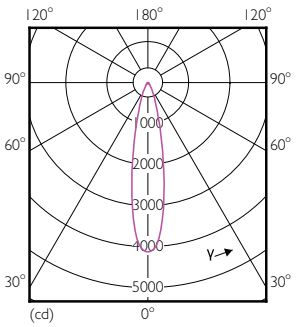

MASTER LEDspot PAR 75W E27 840 25D

MASTER LEDspot PAR

Lifetime

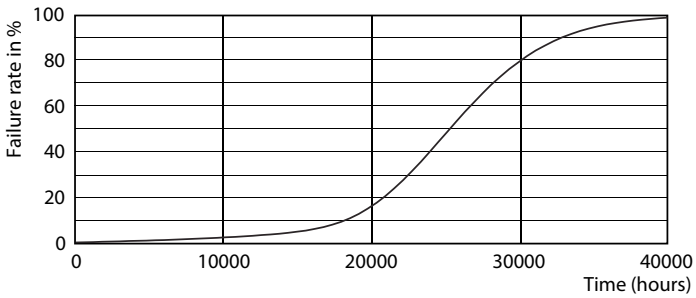

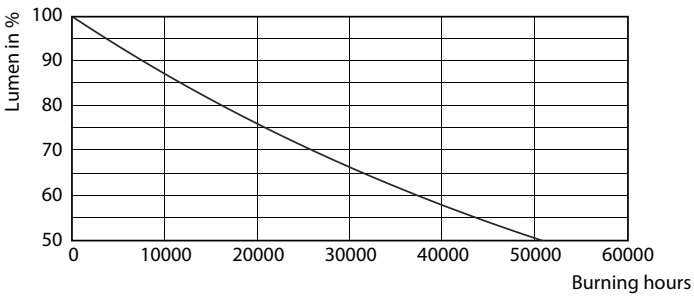

MASTER LEDspot PAR 50W E27 827 25D

MASTER LEDspot PAR 50W E27 827 25D

© 2018 Philips Lighting Holding B.V. All rights reserved. Philips Lighting reserves the right to make changes in specifications and/or to discontinue any product at any timewithout notice or obligation and will not be liable for any consequences resulting from the use of this publication.