

MASTER LEDspot PAR

MAS LEDspot CLA D 9.5-75W 830 PAR30S 25D

With its robust design and warm-white beam of light, these new-generation PAR lamps are ideal for general lighting and spot lighting in the hospitality industry. There is a choice of dimmable and non-dimmable versions. They are especially suitable for public areas such as lobbies, corridors, stairwells, where the light is always on.

Product data

General Information	
Cap-Base	E27 [E27]
Nominal Lifetime (Nom)	25000 h
Switching Cycle	25000X
Technical Type	9.5-75W

Light Technical	
Color Code	830 [CCT of 3000K]
Beam Angle (Nom)	25 °
Luminous Flux (Nom)	760 lm
Luminous Flux (Rated) (Nom)	760 lm
Luminous Intensity (Nom)	3500 cd
Color Designation	White (WH)
Rated Beam Angle	25 °
Correlated Color Temperature (Nom)	3000 K
Luminous Efficacy (Rated) (Nom)	85.26 lm/W
Color Consistency	<6
Color Rendering Index (Nom)	80
LLMF At End Of Nominal Lifetime (Nom)	70 %
Luminous Flux in 90° Cone (Rated)	760 lm

Operating and Electrical	
Input Frequency	50 Hz
Power (Rated) (Nom)	9.5 W
Lamp Current (Nom)	48 mA
Wattage Equivalent	75 W
Starting Time (Nom)	0.5 s
Warm Up Time to 60% Light (Nom)	0.5 s
Power Factor (Nom)	0.85
Voltage (Nom)	220-240 V

Controls and Dimming	
Dimmable	Yes

Approval and Application	
Suitable For Accent Lighting	Yes
Energy Efficiency Label (EEL)	A+
Energy Consumption kWh/1000 h	10 kWh

Product Data	
Full product code	871869671390700
Order product name	MAS LEDspot CLA D 9.5-75W 830 PAR30S 25D
EAN/UPC - Product	8718696713907

MASTER LEDspot PAR

Order code	929001342902
Numerator - Quantity Per Pack	1
Numerator - Packs per outer box	6
Material Nr. (12NC)	929001342902

Net Weight (Piece)	0.230 kg

Dimensional drawing

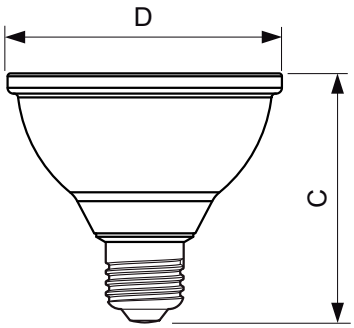

Product	D	C
MAS LEDspot CLA D 9.5-75W 830 PAR30S 25D	95 mm	86 mm

PAR30s 220-240V 9-75W 800lm 3000K E27 D

Photometric data

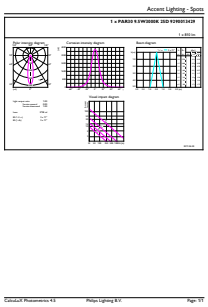

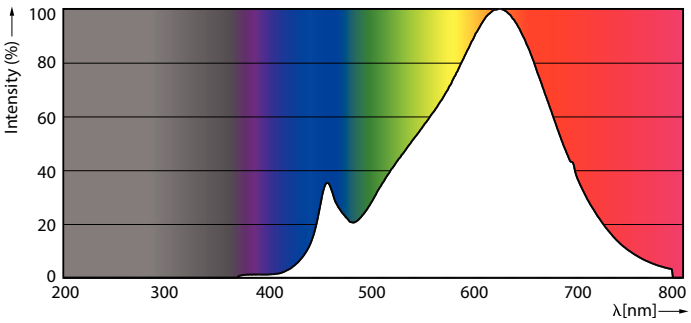

MASTER LEDspot PAR 75W E27 830 25D

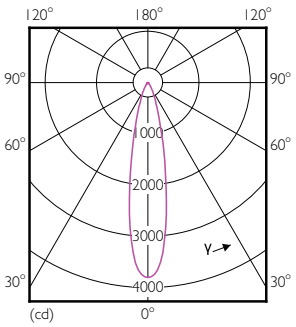

MASTER LEDspot PAR 75W E27 830 25D

MASTER LEDspot PAR

Lifetime

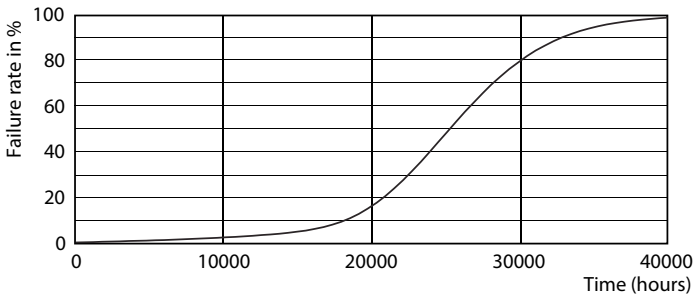

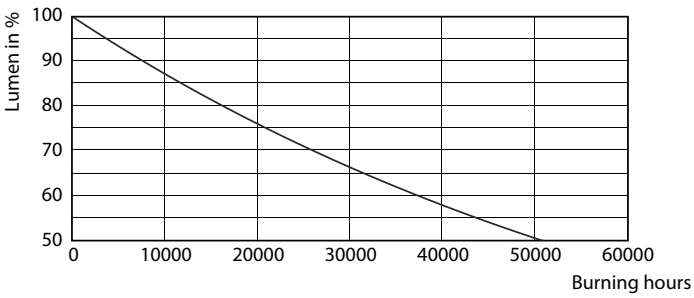

MASTER LEDspot PAR 50W E27 827 25D

MASTER LEDspot PAR 50W E27 827 25D

© 2017 Philips Lighting Holding B.V. All rights reserved. Philips Lighting reserves the right to make changes in specifications and/or to discontinue any product at any timewithout notice or obligation and will not be liable for any consequences resulting from the use of this publication.