


# MASTER LEDspot ExpertColor LV

## MASTER LED ExpertColor 7.5-43W MR16 927 36D

MASTER LEDspot LV ExpertColor creates a warm and comfortable ambience for hospitality venues, homes and restaurants. It creates such an ambience with superior lighting that has a customized spectrum, high CRI, and deep dimming feature. The result? A beautiful lighting experience. What's more, the innovative, trimless lens design will suit almost any interior decor with its clean and neat look. In addition, you can take advantage of the full ExpertColor family, which also includes LEDspot MV and LEDspot Par lamps.

### Product data

| General Information | |
|---|---|
| Cap-Base | GU5.3 [ GU5.3] |
| Nominal Lifetime (Nom) | 40000 h |
| Switching Cycle | 50000X |
| Technical Type | 7.5-43W |

| Light Technical | |
|---|---|
| Color Code | 927 |
| Beam Angle (Nom) | 36 ° |
| Luminous Flux (Nom) | 485 lm |
| Luminous Flux (Rated) (Nom) | 485 lm |
| Luminous Intensity (Nom) | 1400 cd |
| Color Designation | Warm White (WW) |
| Rated Beam Angle | 36 ° |
| Correlated Color Temperature (Nom) | 2700 K |
| Luminous Efficacy (Rated) (Nom) | 64.67 lm/W |
| Color Consistency | <3 |
| Color Rendering Index (Nom) | 92 |
| LLMF At End Of Nominal Lifetime (Nom) | 70 % |
| Luminous Flux in 90° Cone (Rated) | 485 lm |

| Operating and Electrical | |
|---|---|
| Power (Rated) (Nom) | 7.5 W |
| Lamp Current (Nom) | 880 mA |
| Wattage Equivalent | 43 W |
| Starting Time (Nom) | 0.5 s |
| Warm Up Time to 60% Light (Nom) | 0.5 s |
| Power Factor (Nom) | 0.7 |
| Voltage (Nom) | ac electronic 12 V |

| Temperature | |
|---|---|
| T-Case Maximum (Nom) | 93 °C |

# MASTER LEDspot ExpertColor LV

| Controls and Dimming | |
|---|---|
| **Dimmable** | Yes |

| Approval and Application | |
|---|---|
| **Suitable For Accent Lighting** | Yes |
| **Energy Efficiency Label (EEL)** | A |
| **Energy Consumption kWh/1000 h** | 9 kWh |

| Product Data | |
|---|---|
| **Full product code** | 871869673544200 |

| | |
|---|---|
| **Order product name** | MASTER LED ExpertColor 7.5-43W MR16 927 36D |
| **EAN/UPC - Product** | 8718696735442 |
| **Order code** | 929001386302 |
| **Numerator - Quantity Per Pack** | 1 |
| **Numerator - Packs per outer box** | 10 |
| **Material Nr. (12NC)** | 929001386302 |
| **Net Weight (Piece)** | 0.034 kg |

## Dimensional drawing

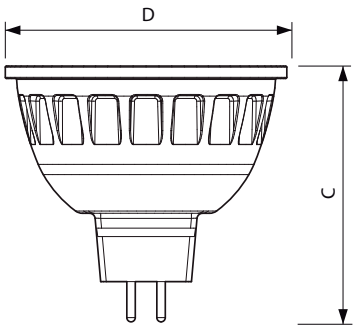


**MR16 12V 8-43W 550lm 36D 2700K GU5.3 D**

| Product | D | C |
|---|---|---|
| MASTER LED ExpertColor 7.5-43W MR16 927 36D | 50.5 mm | 46 mm |

## Photometric data

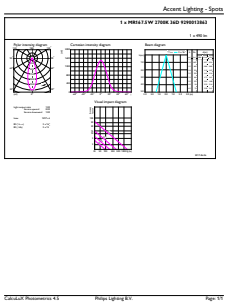

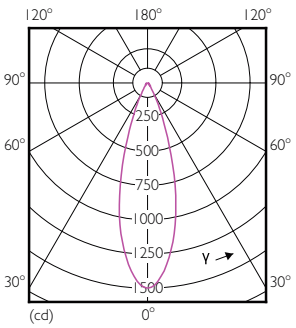


**MAS LEDspotLV 43W GU5-3 927 36D MR16**

# MASTER LEDspot ExpertColor LV

## Photometric data

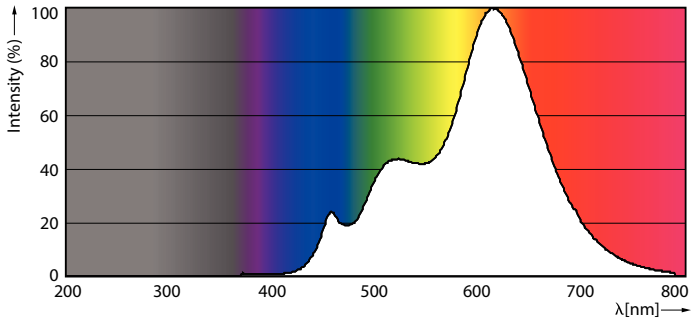


MAS LEDspotLV 43W GU5-3 927 24D MR16

## Lifetime

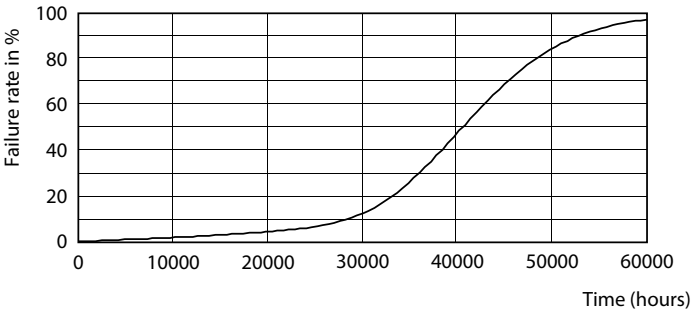


MAS LEDspotLV 43W GU5-3 927 24D MR16

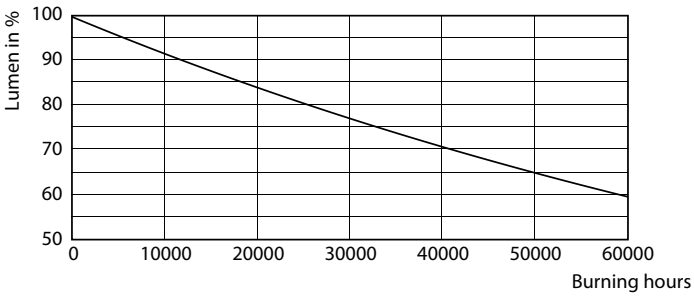


MAS LEDspotLV 43W GU5-3 927 24D MR16

© 2017 Philips Lighting Holding B.V. All rights reserved. Philips Lighting reserves the right to make changes in specifications and/or to discontinue any product at any timewithout notice or obligation and will not be liable for any consequences resulting from the use of this publication.