PHILIPS

Lighting



MASTER LEDspot ExpertColor LV

MASTER LED ExpertColor 7.5-43W MR16 930 24D

MASTER LEDspot LV ExpertColor creates a warm and comfortable ambience for hospitality venues, homes and restaurants. It creates such an ambience with superior lighting that has a customized spectrum, high CRI, and deep dimming feature. The result? A beautiful lighting experience. What's more, the innovative, trimless lens design will suit almost any interior decor with its clean and neat look. In addition, you can take advantage of the full ExpertColor family, which also includes LEDspot MV and LEDspot Par lamps.

Product data

General Information	
Cap-Base	GU5.3 [GU5.3]
Nominal Lifetime (Nom)	40000 h
Switching Cycle	50000X
Technical Type	7.5-43W

Light Technical	
Color Code	930 [CCT of 3000K]
Beam Angle (Nom)	24 °
Luminous Flux (Nom)	500 lm
Luminous Flux (Rated) (Nom)	500 lm
Luminous Intensity (Nom)	2600 cd
Color Designation	White (WH)
Rated Beam Angle	24 °
Correlated Color Temperature (Nom)	3000 K
Luminous Efficacy (Rated) (Nom)	66.67 lm/W
Color Consistency	<3
Color Rendering Index (Nom)	92
LLMF At End Of Nominal Lifetime (Nom)	70 %
Luminous Flux in 90° Cone (Rated)	500 lm

Operating and Electrical	
Power (Rated) (Nom)	7.5 W
Lamp Current (Nom)	880 mA
Wattage Equivalent	43 W
Starting Time (Nom)	0.5 s
Warm Up Time to 60% Light (Nom)	0.5 s
Power Factor (Nom)	0.7
Voltage (Nom)	ac electronic 12 V

Temperature	
T-Case Maximum (Nom)	93 °C

MASTER LEDspot ExpertColor LV

Controls and Dimming	
Dimmable	Yes

Approval and Application	
Suitable For Accent Lighting	Yes
Energy Efficiency Label (EEL)	A
Energy Consumption kWh/1000 h	9 kWh

Product Data	
Full product code	871869673540400

Order product name	MASTER LED ExpertColor 7.5-43W MR16 930 24D
EAN/UPC - Product	8718696735404
Order code	929001386102
Numerator - Quantity Per Pack	1
Numerator - Packs per outer box	10
Material Nr. (12NC)	929001386102
Net Weight (Piece)	0.034 kg

Dimensional drawing

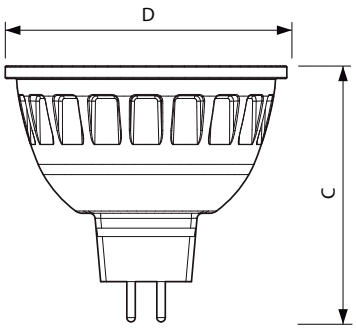

MR16 12V 8-43W 550lm 24D 3000K GU5.3 D

Product	D	C
MASTER LED ExpertColor 7.5-43W MR16 930 24D	50.5 mm	46 mm

Photometric data

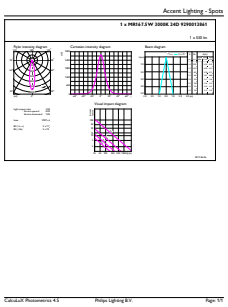

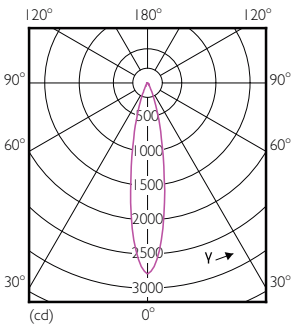

MAS LEDspotLV 43W GU5-3 930 24D MR16

MASTER LEDspot ExpertColor LV

Photometric data

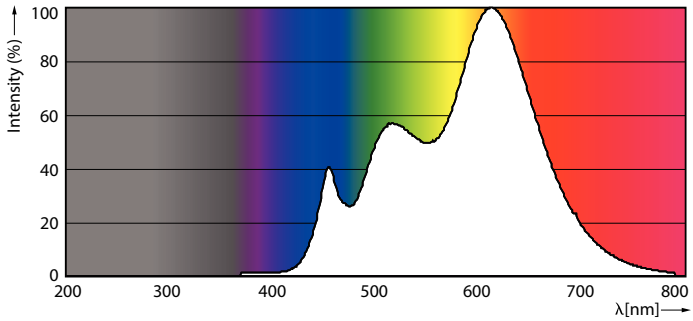

MAS LEDspotLV 43W GU5-3 930 24D MR16

Lifetime

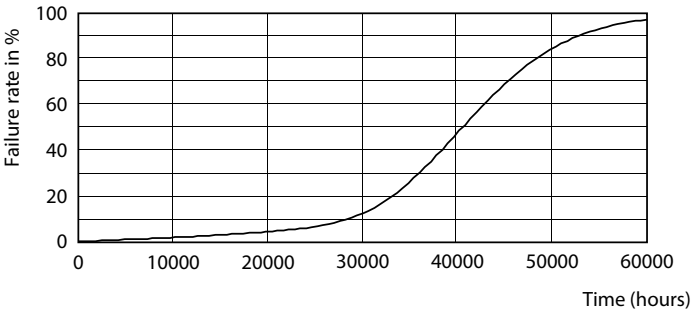

MAS LEDspotLV 43W GU5-3 927 24D MR16

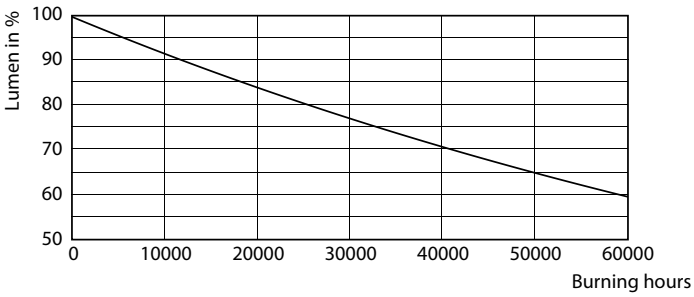

MAS LEDspotLV 43W GU5-3 927 24D MR16

© 2017 Philips Lighting Holding B.V. All rights reserved. Philips Lighting reserves the right to make changes in specifications and/or to discontinue any product at any timewithout notice or obligation and will not be liable for any consequences resulting from the use of this publication.