PHILIPS

Lighting




# MASTER LEDspot ExpertColor LV

## MASTER LED ExpertColor 6.5-35W MR16 927 10D

MASTER LEDspot LV ExpertColor creates a warm and comfortable ambience for hospitality venues, homes and restaurants. It creates such an ambience with superior lighting that has a customized spectrum, high CRI, and deep dimming feature. The result? A beautiful lighting experience. What's more, the innovative, trimless lens design will suit almost any interior decor with its clean and neat look. In addition, you can take advantage of the full ExpertColor family, which also includes LEDspot MV and LEDspot Par lamps.

### Product data

| General Information | |
|---|---|
| Cap-Base | GU5.3 [ GU5.3] |
| Nominal Lifetime (Nom) | 40000 h |
| Switching Cycle | 50000X |
| Technical Type | 6.5-35W |

| Light Technical | |
|---|---|
| Color Code | 927 |
| Beam Angle (Nom) | 10 ° |
| Luminous Flux (Nom) | 410 lm |
| Luminous Flux (Rated) (Nom) | 410 lm |
| Luminous Intensity (Nom) | 4600 cd |
| Color Designation | Warm White (WW) |
| Rated Beam Angle | 10 ° |
| Correlated Color Temperature (Nom) | 2700 K |
| Luminous Efficacy (Rated) (Nom) | 63.00 lm/W |
| Color Consistency | <3 |
| Color Rendering Index (Nom) | 97 |
| LLMF At End Of Nominal Lifetime (Nom) | 70 % |
| Luminous Flux in 90° Cone (Rated) | 410 lm |

| Operating and Electrical | |
|---|---|
| Power (Rated) (Nom) | 6.5 W |
| Lamp Current (Nom) | 800 mA |
| Wattage Equivalent | 35 W |
| Starting Time (Nom) | 0.5 s |
| Warm Up Time to 60% Light (Nom) | 0.5 s |
| Power Factor (Nom) | 0.7 |
| Voltage (Nom) | ac electronic 12 V |

| Temperature | |
|---|---|
| T-Case Maximum (Nom) | 90 °C |

# MASTER LEDspot ExpertColor LV

| Controls and Dimming | |
|---|---|
| Dimmable | Yes |

| Approval and Application | |
|---|---|
| Suitable For Accent Lighting | Yes |
| Energy Efficiency Label (EEL) | A |
| Energy Consumption kWh/1000 h | 8 kWh |

| Product Data | |
|---|---|
| Full product code | 871869673871900 |

| | |
|---|---|
| Order product name | MASTER LED ExpertColor 6.5-35W MR16 927 10D |
| EAN/UPC - Product | 8718696738719 |
| Order code | 929001341702 |
| Numerator - Quantity Per Pack | 1 |
| Numerator - Packs per outer box | 10 |
| Material Nr. (12NC) | 929001341702 |
| Net Weight (Piece) | 0.034 kg |

## Dimensional drawing

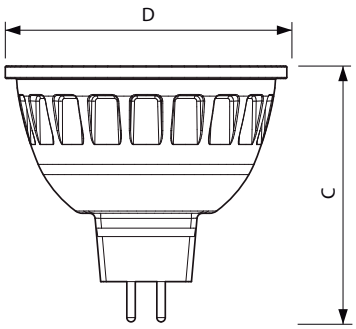


| Product | D | C |
|---|---|---|
| MASTER LED ExpertColor 6.5-35W MR16 927 10D | 51 mm | 46 mm |

MR16 12V 6.5-30W 420lm 10D 2700K GU5.3 D

## Photometric data

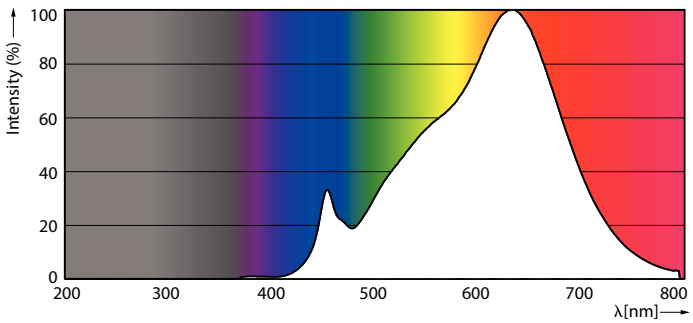


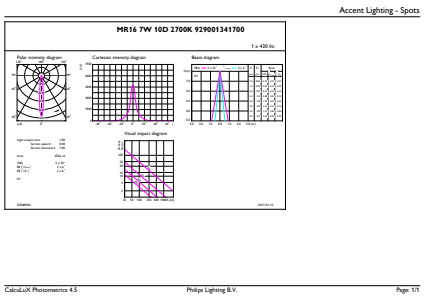


PAR38 120V 17-90W 1150lm 8D 2700K E26 D

# MASTER LEDspot ExpertColor LV

## Photometric data

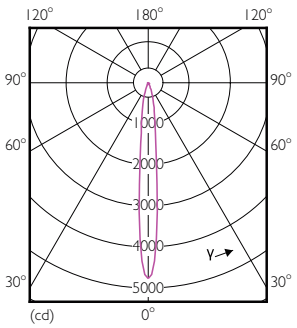


LEDSpot MR16 7W 927 430lm 10D

## Lifetime

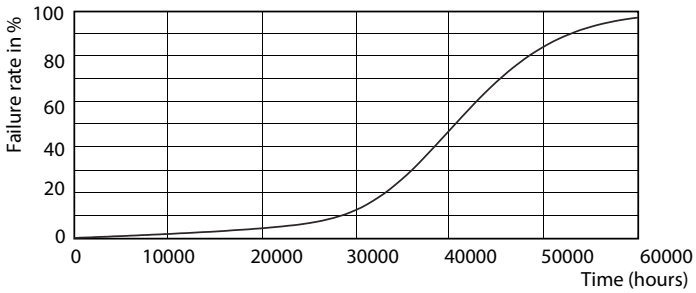


LEDspots MR16 7W

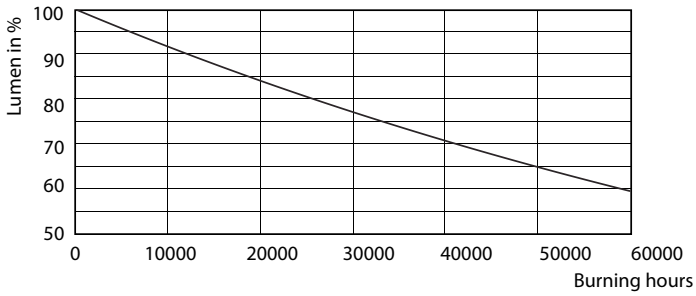


LEDspots MR16 7W

© 2017 Philips Lighting Holding B.V. All rights reserved. Philips Lighting reserves the right to make changes in specifications and/or to discontinue any product at any timewithout notice or obligation and will not be liable for any consequences resulting from the use of this publication.