

MASTER LEDspot ExpertColor LV

MASTER LED ExpertColor 6.5-35W MR16 930 24D

MASTER LEDspot LV ExpertColor creates a warm and comfortable ambience for hospitality venues, homes and restaurants. It creates such an ambience with superior lighting that has a customized spectrum, high CRI, and deep dimming feature. The result? A beautiful lighting experience. What's more, the innovative, trimless lens design will suit almost any interior decor with its clean and neat look. In addition, you can take advantage of the full ExpertColor family, which also includes LEDspot MV and LEDspot Par lamps.

Product data

General Information	
Cap-Base	GU5.3 [GU5.3]
Nominal Lifetime (Nom)	40000 h
Switching Cycle	50000X
Technical Type	6.5-35W

Light Technical	
Color Code	930 [CCT of 3000K]
Beam Angle (Nom)	24 °
Luminous Flux (Nom)	440 lm
Luminous Flux (Rated) (Nom)	440 lm
Luminous Intensity (Nom)	2350 cd
Color Designation	White (WH)
Rated Beam Angle	24 °
Correlated Color Temperature (Nom)	3000 K
Luminous Efficacy (Rated) (Nom)	67.69 lm/W
Color Consistency	<3
Color Rendering Index (Nom)	97
LLMF At End Of Nominal Lifetime (Nom)	70 %
Luminous Flux in 90° Cone (Rated)	440 lm

Operating and Electrical	
Power (Rated) (Nom)	6.5 W
Lamp Current (Nom)	800 mA
Wattage Equivalent	35 W
Starting Time (Nom)	0.5 s
Warm Up Time to 60% Light (Nom)	0.5 s
Power Factor (Nom)	0.7
Voltage (Nom)	ac electronic 12 V

Temperature	
T-Case Maximum (Nom)	90 °C

MASTER LEDspot ExpertColor LV

Controls and Dimming	
Dimmable	Yes

Approval and Application	
Suitable For Accent Lighting	Yes
Energy Efficiency Label (EEL)	A+
Energy Consumption kWh/1000 h	8 kWh

Product Data	
Full product code	871869673879500

Order product name	MASTER LED ExpertColor 6.5-35W MR16 930 24D
EAN/UPC - Product	8718696738795
Order code	929001342102
Numerator - Quantity Per Pack	1
Numerator - Packs per outer box	10
Material Nr. (12NC)	929001342102
Net Weight (Piece)	0.034 kg

Dimensional drawing

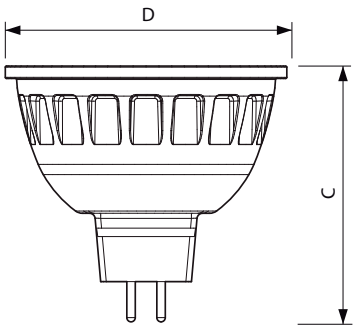

MR16 12V 6.5-42W 450lm 25D 3000K GU5.3 D

Product	D	C
MASTER LED ExpertColor 6.5-35W MR16 930 24D	51 mm	46 mm

Photometric data

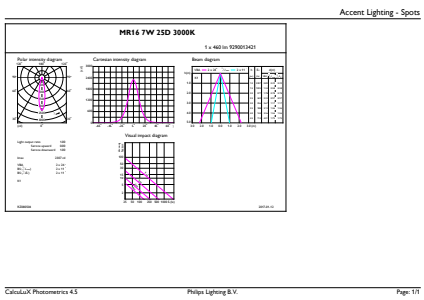

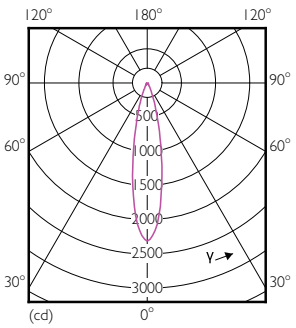

LEDSpots MR16 7W 930 460lm 25D

MASTER LEDspot ExpertColor LV

Photometric data

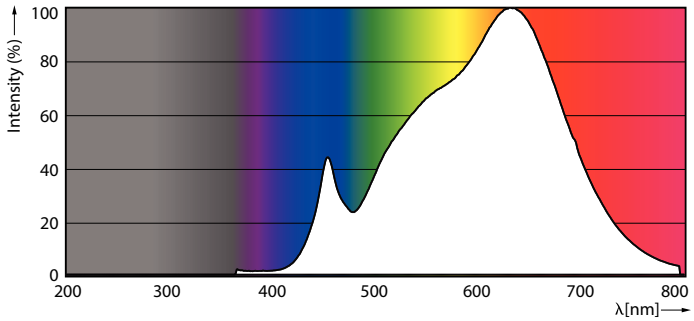

LEDspots MR16 7W 3000K

Lifetime

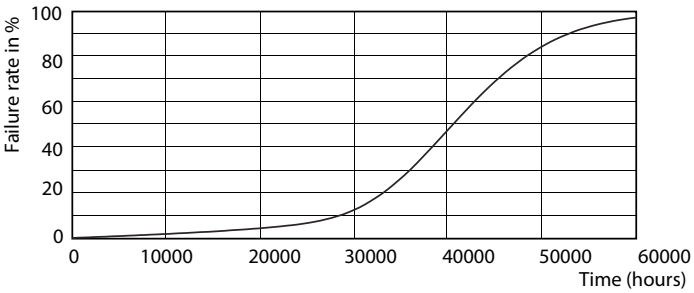

LEDspots MR16 7W

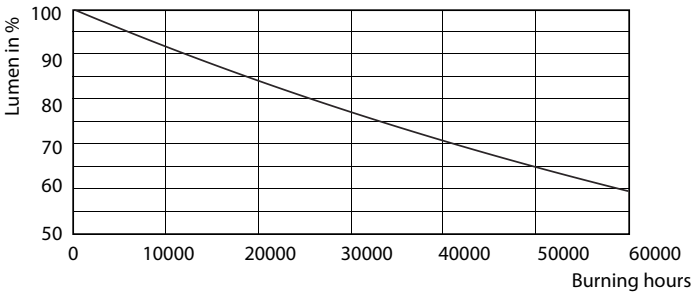

LEDspots MR16 7W

© 2017 Philips Lighting Holding B.V. All rights reserved. Philips Lighting reserves the right to make changes in specifications and/or to discontinue any product at any timewithout notice or obligation and will not be liable for any consequences resulting from the use of this publication.