PHILIPS

Lighting



MASTER LEDspot ExpertColor LV

MASTER LED ExpertColor 6.5-35W MR16 927 60D

MASTER LEDspot LV ExpertColor creates a warm and comfortable ambience for hospitality venues, homes and restaurants. It creates such an ambience with superior lighting that has a customized spectrum, high CRI, and deep dimming feature. The result? A beautiful lighting experience. What's more, the innovative, trimless lens design will suit almost any interior decor with its clean and neat look. In addition, you can take advantage of the full ExpertColor family, which also includes LEDspot MV and LEDspot Par lamps.

Product data

General Information	
Cap-Base	GU5.3 [GU5.3]
Nominal Lifetime (Nom)	40000 h
Switching Cycle	50000X
Technical Type	6.5-35W

Light Technical	
Color Code	927
Beam Angle (Nom)	60 °
Luminous Flux (Nom)	400 lm
Luminous Flux (Rated) (Nom)	400 lm
Luminous Intensity (Nom)	410 cd
Color Designation	Warm White (WW)
Rated Beam Angle	60 °
Correlated Color Temperature (Nom)	2700 K
Luminous Efficacy (Rated) (Nom)	61.54 lm/W
Color Consistency	<3
Color Rendering Index (Nom)	97
LLMF At End Of Nominal Lifetime (Nom)	70 %
Luminous Flux in 90° Cone (Rated)	400 lm

Operating and Electrical	
Power (Rated) (Nom)	6.5 W
Lamp Current (Nom)	800 mA
Wattage Equivalent	35 W
Starting Time (Nom)	0.5 s
Warm Up Time to 60% Light (Nom)	0.5 s
Power Factor (Nom)	0.7
Voltage (Nom)	ac electronic 12 V

Temperature	
T-Case Maximum (Nom)	90 °C

MASTER LEDspot ExpertColor LV

Controls and Dimming	
Dimmable	Yes

Approval and Application	
Suitable For Accent Lighting	Yes
Energy Efficiency Label (EEL)	A
Energy Consumption kWh/1000 h	8 kWh

Product Data	
Full product code	871869675751200

Order product name	MASTER LED ExpertColor 6.5-35W MR16 927 60D
EAN/UPC - Product	8718696757512
Order code	929001341402
Numerator - Quantity Per Pack	1
Numerator - Packs per outer box	10
Material Nr. (12NC)	929001341402
Net Weight (Piece)	0.034 kg

Dimensional drawing

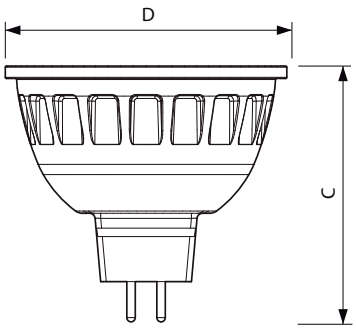

MAS LED MR16 ExpertColor 7.2-50W 927 60D

Product	D	C
MASTER LED ExpertColor 6.5-35W MR16 927 60D	50.5 mm	46 mm

Photometric data

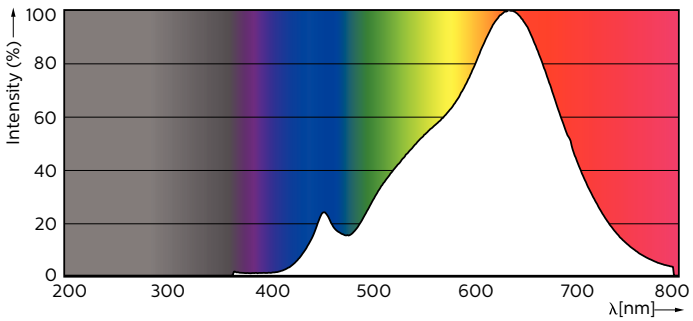

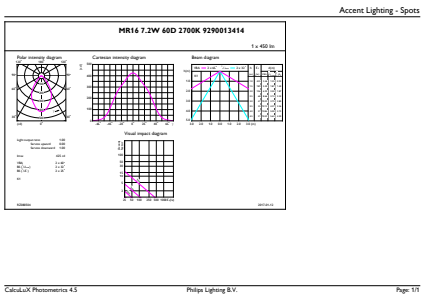

Master LEDspot ExpertColor LV 50W EZ10 927 10D

MASTER LEDspot ExpertColor LV

Photometric data

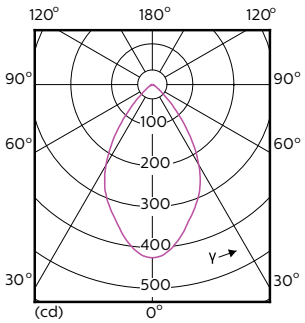

Master LEDspot ExpertColor LV 50W GU5.3 927 60D

Lifetime

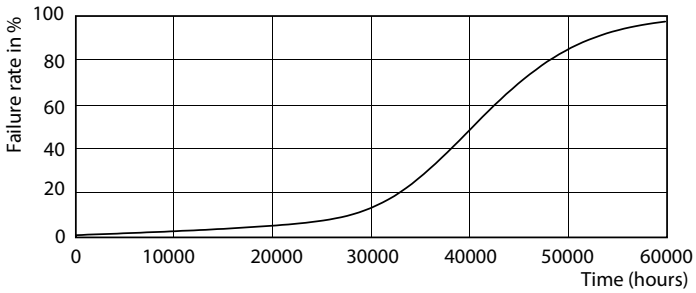

Master LEDspot ExpertColor LV 50W EZ10 927 10D

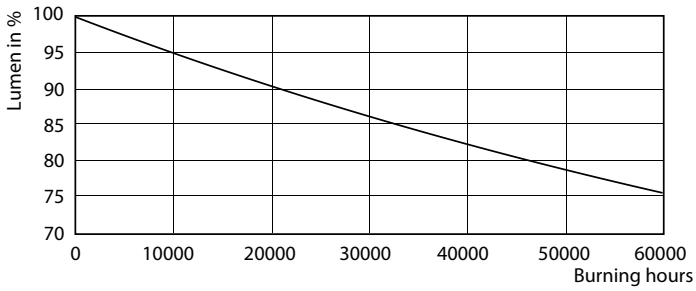

Master LEDspot ExpertColor LV 50W EZ10 927 10D

© 2017 Philips Lighting Holding B.V. All rights reserved. Philips Lighting reserves the right to make changes in specifications and/or to discontinue any product at any timewithout notice or obligation and will not be liable for any consequences resulting from the use of this publication.