PHILIPS

Lighting



MASTER LEDspot LV

MAS LED spot VLE D 7-50W MR16 840 36D

Delivering a warm, halogen-like accent beam, MASTER LEDspot LV is an ideal retrofit solution for spot and general lighting applications in the hospitality industry. It is particularly suited to public areas such as receptions, lobbies, corridors, stairwells and washrooms, where the light is on all the time. The robustly designed MASTER LEDspot offers a choice of beam angles for a clearly defined beam spread. There is no UV or IR in the beam, making it suitable for illuminating heat-sensitive objects (food, organic materials, paintings, etc.). The patented intelligent driver enables broad compatibility with existing electromagnetic and electronic halogen transformers. The dimmable versions drive further efficiencies, while helping to create the desired atmosphere.

Product data

General Information	
Cap base	GU5.3 [GU5.3]
Nominal lifetime (nom.)	25000 h
Switching cycle	50000X
Technical type	7-50W

Light Technical	
Colour code	840 [CCT of 4000K (841)]
Beam Angle (Nom)	36 °
Luminous flux (nom.)	660 lm
Luminous flux (rated) (nom.)	660 lm
Luminous intensity (nom.)	1800 cd
Colour designation	Cool White (CW)
Rated beam angle	36 °
Correlated colour temperature (nom.)	4000 K
Luminous efficacy (rated) (nom.)	94.29 lm/W
Colour consistency	<6
Color rendering index (nom.)	80
LLMF at end of nominal lifetime (nom.)	70 %
Luminous Flux in 90° Cone (Rated)	660 lm

Operating and Electrical	
Power (Rated) (Nom)	7 W
Lamp current (nom.)	760 mA
Wattage equivalent	50 W
Starting time (nom.)	0.5 s
Warm-up time to 60% light (nom.)	0.5 s
Power factor (nom.)	0.8
Voltage (Nom)	ac Electronic 12 V

Temperature	
T-Case maximum (nom.)	105 °C

Controls and Dimming	
Dimmable	Yes

MASTER LEDspot LV

Approval and Application	
Suitable for accent lighting	Yes
Energy efficiency label (EEL)	A+
Energy Consumption kWh/1000 h	8 kWh

Product Data	
Full product code	871869670839200
Order product name	MAS LED spot VLE D 7-50W MR16 840 36D

EAN/UPC – product	8718696708392
Order code	70839200
Numerator – quantity per pack	1
Numerator – packs per outer box	10
Material no. (12NC)	929001326702
Net weight (piece)	0.045 kg

Warnings and Safety

- Operating temperature range is between -20° C and 45° C ambient
- Only to apply in dry or damp locations and most of open fixtures with lamp-holders that offer sufficient space (10 mm free air space)
- Not intended for use with emergency light fixtures or exit lights

Dimensional drawing

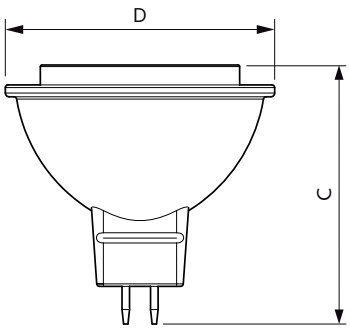

MR16 12V 7.5W-50W 36D 4000K GU5.3 D

Product	D	C
MAS LED spot VLE D 7-50W MR16 840 36D	50.5 mm	49.5 mm

Photometric data

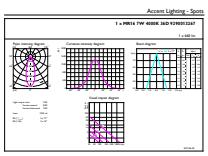

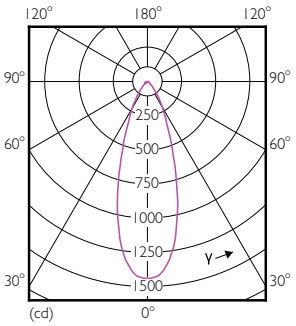

MASTER LEDspot LV

Photometric data

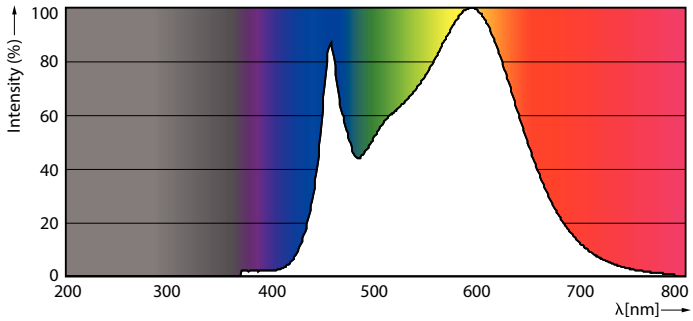

Lifetime

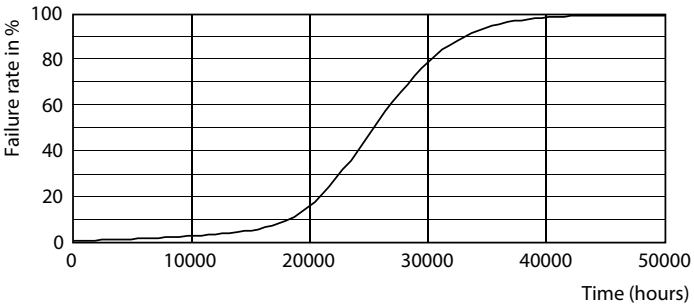

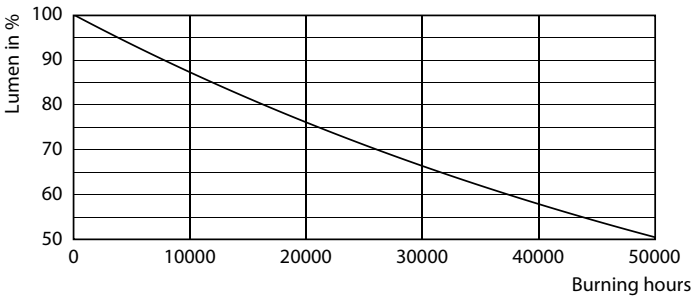

© 2018 Philips Lighting Holding B.V. All rights reserved. Philips Lighting reserves the right to make changes in specifications and/or to discontinue any product at any timewithout notice or obligation and will not be liable for any consequences resulting from the use of this publication.