IKE64471XB

EN **User Manual**
Hob

# USER MANUAL

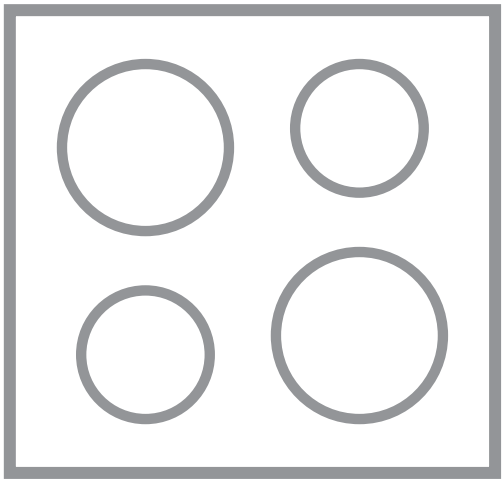

AEG

# CONTENTS

**1.** SAFETY INFORMATION....2
**2.** SAFETY INSTRUCTIONS....4
**3.** PRODUCT DESCRIPTION....7
**4.** DAILY USE....9
**5.** FLEXIBLE INDUCTION COOKING AREA....12
**6.** HINTS AND TIPS....16
**7.** CARE AND CLEANING....18
**8.** TROUBLESHOOTING....18
**9.** INSTALLATION....21
**10.** TECHNICAL DATA....22
**11.** ENERGY EFFICIENCY....23

# FOR PERFECT RESULTS

Thank you for choosing this AEG product. We have created it to give you impeccable performance for many years, with innovative technologies that help make life simpler features you might not find on ordinary appliances. Please spend a few minutes reading to get the very best from it.
Visit our website for:

Get usage advice, brochures, trouble shooter, service information:
**www.aeg.com/webselfservice**

Register your product for better service:
**www.registeraeg.com**

Buy Accessories, Consumables and Original spare parts for your appliance:
**www.aeg.com/shop**

# CUSTOMER CARE AND SERVICE

Always use original spare parts.
When contacting our Authorised Service Centre, ensure that you have the following data available: Model, PNC, Serial Number.
The information can be found on the rating plate.

⚠ Warning / Caution-Safety information

ⓘ General information and tips

Environmental information

Subject to change without notice.

# 1. ⚠ SAFETY INFORMATION

Before the installation and use of the appliance, carefully read the supplied instructions. The manufacturer is not responsible for any injuries or damages that are the result of incorrect installation or

usage. Always keep the instructions in a safe and accessible location for future reference.

## 1.1 Children and vulnerable people safety

- This appliance can be used by children aged from 8 years and above and persons with reduced physical, sensory or mental capabilities or lack of experience and knowledge if they have been given supervision or instruction concerning the use of the appliance in a safe way and understand the hazards involved.
- Do not let children play with the appliance.
- Keep all packaging away from children and dispose of it appropriately.
- Keep children and pets away from the appliance when it operates or when it cools down. Accessible parts are hot.
- If the appliance has a child safety device, this should be activated.
- Children shall not carry out cleaning and user maintenance of the appliance without supervision.
- Children aged 3 years and under must be kept away from this appliance when it is in operation at all times.

## 1.2 General Safety

- WARNING: The appliance and its accessible parts become hot during use. Care should be taken to avoid touching heating elements. Children less than 8 years of age shall be kept away unless continuously supervised.
- Do not operate the appliance by means of an external timer or separate remote-control system.
- WARNING: Unattended cooking on a hob with fat or oil can be dangerous and may result in fire.
- NEVER try to extinguish a fire with water, but switch off the appliance and then cover flame e.g. with a lid or a fire blanket.

- CAUTION: The cooking process has to be supervised. A short term cooking process has to be supervised continuously.
- WARNING: Danger of fire: Do not store items on the cooking surfaces.
- Metallic objects such as knives, forks, spoons and lids should not be placed on the hob surface since they can get hot.
- Do not use a steam cleaner to clean the appliance.
- After use, switch off the hob element by its control and do not rely on the pan detector.
- If the glass ceramic surface / glass surface is cracked, switch off the appliance and unplug it from the mains. In case the appliance is connected to the mains directly using junction box, remove the fuse to disconnect the appliance from power supply. In either case contact the Authorised Service Centre.
- If the supply cord is damaged, it must be replaced by the manufacturer, an authorized Service or similarly qualified persons in order to avoid a hazard.
- WARNING: Use only hob guards designed by the manufacturer of the cooking appliance or indicated by the manufacturer of the appliance in the instructions for use as suitable or hob guards incorporated in the appliance. The use of inappropriate guards can cause accidents.

# 2. SAFETY INSTRUCTIONS

## 2.1 Installation



**WARNING!**
Only a qualified person must install this appliance.



**WARNING!**
Risk of injury or damage to the appliance.

- Remove all the packaging.
- Do not install or use a damaged appliance.
- Follow the installation instruction supplied with the appliance.
- Keep the minimum distance from the other appliances and units.
- Always take care when moving the appliance as it is heavy. Always use safety gloves and enclosed footwear.
- Seal the cut surfaces with a sealant to prevent moisture to cause swelling.
- Protect the bottom of the appliance from steam and moisture.
- Do not install the appliance adjacent to a door or under a window. This prevents hot cookware to fall from the

appliance when the door or the window is opened.
- Each appliance has cooling fans on the bottom.
- If the appliance is installed above a drawer:
  – Do not store any small pieces or sheets of paper that could be pulled in, as they can damage the cooling fans or impair the cooling system.
  – Keep a distance of minimum 2 cm between the bottom of the appliance and parts stored in the drawer.

## 2.2 Electrical Connection

**WARNING!**
Risk of fire and electrical shock.

- All electrical connections should be made by a qualified electrician.
- The appliance must be earthed.
- Before carrying out any operation make sure that the appliance is disconnected from the power supply.
- Make sure that the parameters on the rating plate are compatible with the electrical ratings of the mains power supply.
- Make sure the appliance is installed correctly. Loose and incorrect electricity mains cable or plug (if applicable) can make the terminal become too hot.
- Use the correct electricity mains cable.
- Do not let the electricity mains cable tangle.
- Make sure that a shock protection is installed.
- Use the strain relief clamp on the cable.
- Make sure the mains cable or plug (if applicable) does not touch the hot appliance or hot cookware, when you connect the appliance to the near sockets.
- Do not use multi-plug adapters and extension cables.
- Make sure not to cause damage to the mains plug (if applicable) or to the mains cable. Contact our Authorised Service Centre or an electrician to change a damaged mains cable.
- The shock protection of live and insulated parts must be fastened in such a way that it cannot be removed without tools.
- Connect the mains plug to the mains socket only at the end of the installation. Make sure that there is access to the mains plug after the installation.
- If the mains socket is loose, do not connect the mains plug.
- Do not pull the mains cable to disconnect the appliance. Always pull the mains plug.
- Use only correct isolation devices: line protecting cut-outs, fuses (screw type fuses removed from the holder), earth leakage trips and contactors.
- The electrical installation must have an isolation device which lets you disconnect the appliance from the mains at all poles. The isolation device must have a contact opening width of minimum 3 mm.

## 2.3 Use

**WARNING!**
Risk of injury, burns and electrical shock.

- Remove all the packaging, labelling and protective film (if applicable) before first use.
- Use this appliance in a household environment.
- Do not change the specification of this appliance.
- Make sure that the ventilation openings are not blocked.
- Do not let the appliance stay unattended during operation.
- Set the cooking zone to “off” after each use.
- Do not rely on the pan detector.
- Do not put cutlery or saucepan lids on the cooking zones. They can become hot.
- Do not operate the appliance with wet hands or when it has contact with water.
- Do not use the appliance as a work surface or as a storage surface.

- If the surface of the appliance is cracked, disconnect immediately the appliance from the power supply. This to prevent an electrical shock.
- Users with a pacemaker must keep a distance of minimum 30 cm from the induction cooking zones when the appliance is in operation.
- When you place food into hot oil, it may splash.



**WARNING!**
Risk of fire and explosion

- Fats and oil when heated can release flammable vapours. Keep flames or heated objects away from fats and oils when you cook with them.
- The vapours that very hot oil releases can cause spontaneous combustion.
- Used oil, that can contain food remnants, can cause fire at a lower temperature than oil used for the first time.
- Do not put flammable products or items that are wet with flammable products in, near or on the appliance.



**WARNING!**
Risk of damage to the appliance.

- Do not keep hot cookware on the control panel.
- Do not put a hot pan cover on the glass surface of the hob.
- Do not let cookware to boil dry.
- Be careful not to let objects or cookware fall on the appliance. The surface can be damaged.
- Do not activate the cooking zones with empty cookware or without cookware.
- Do not put aluminium foil on the appliance.
- Cookware made of cast iron, aluminium or with a damaged bottom can cause scratches on the glass / glass ceramic. Always lift these objects up when you have to move them on the cooking surface.
- This appliance is for cooking purposes only. It must not be used for other purposes, for example room heating.

## 2.4 Care and cleaning

- Clean regularly the appliance to prevent the deterioration of the surface material.
- Deactivate the appliance and let it cool down before you clean it.
- Disconnect the appliance from the electrical supply before maintenance.
- Do not use water spray and steam to clean the appliance.
- Clean the appliance with a moist soft cloth. Only use neutral detergents. Do not use any abrasive products, abrasive cleaning pads, solvents or metal objects.

## 2.5 Disposal



**WARNING!**
Risk of injury or suffocation.

- Contact your municipal authority for information on how to discard the appliance correctly.
- Disconnect the appliance from the mains supply.
- Cut off the mains electrical cable close to the appliance and dispose of it.

## 2.6 Service

- To repair the appliance contact an Authorised Service Centre.
- Use original spare parts only.

# 3. PRODUCT DESCRIPTION

## 3.1 Cooking surface layout

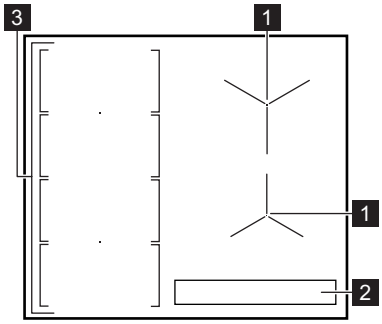


1 Induction cooking zone
2 Control panel
3 Flexible induction cooking area consisting of four sections

## 3.2 Control panel layout

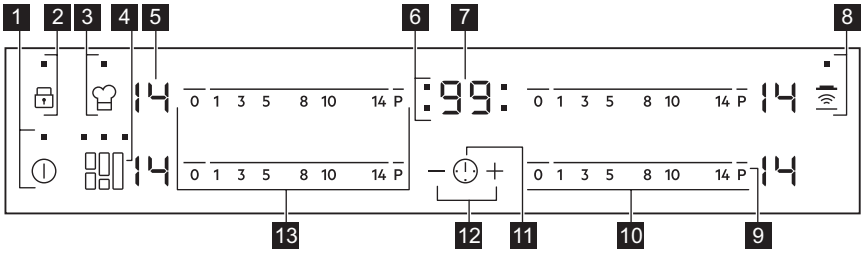


Use the sensor fields to operate the appliance. The displays, indicators and sounds tell which functions operate.

| | Sensor field | Function | Comment |
|---|---|---|---|
| 1 | ⏻ | ON / OFF | To activate and deactivate the hob. |
| 2 | 🔒 | Lock / Child Safety Device | To lock / unlock the control panel. |
| 3 | | PowerSlide | To activate and deactivate the function. |
| 4 | | FlexiBridge | To switch between three modes of the function. |
| 5 | - | Heat setting display | To show the heat setting. |
| 6 | - | Timer indicators of cooking zones | To show for which zone you set the time. |
| 7 | - | Timer display | To show the time in minutes. |

| | Sensor field | Function | Comment |
|---|---|---|---|
| 8 | | Hob²Hood | To activate and deactivate the manual mode of the function. |
| 9 | P | PowerBoost | To activate and deactivate the function. |
| 10 | - | Control bar | To set a heat setting. |
| 11 | | - | To select the cooking zone. |
| 12 | + / − | - | To increase or decrease the time. |
| 13 | - | Control bar | To set the heat setting for flexible induction cooking area. |

## 3.3 Heat setting displays

| Display | Description |
|---|---|
| 0 | The cooking zone is deactivated. |
| 1 - 14 | The cooking zone operates. |
| A | Automatic Heat Up operates. |
| P | PowerBoost operates. |
| E + digit | There is a malfunction. |
| H / h / r | OptiHeat Control (3 step Residual heat indicator): continue cooking / keep warm / residual heat. |
| L | Lock / Child Safety Device operates. |
| F | Incorrect or too small cookware or no cookware on the cooking zone. |
| - | Automatic Switch Off operates. |
| 1 / 1- / 1¯ | PowerSlide operates. |

## 3.4 OptiHeat Control (3 step Residual heat indicator)

**WARNING!**
H / h / r There is a risk of burns from residual heat.
The indicator shows the level of the residual heat.

The induction cooking zones make the heat necessary for cooking process directly in the bottom of the cookware. The glass ceramic is heated by the heat of the cookware.

# 4. DAILY USE

**WARNING!**
Refer to Safety chapters.

## 4.1 Activating and deactivating

Touch ⏻ for 1 second to activate or deactivate the hob.

## 4.2 Automatic Switch Off

**The function deactivates the hob automatically if:**

- all cooking zones are deactivated,
- you do not set the heat setting after you activate the hob,
- you spill something or put something on the control panel for more than 10 seconds (a pan, a cloth, etc.). An acoustic signal sounds and the hob deactivates. Remove the object or clean the control panel.
- the hob gets too hot (e.g. when a saucepan boils dry). Let the cooking zone cool down before you use the hob again.
- you use incorrect cookware. The symbol F comes on and the cooking zone deactivates automatically after 2 minutes.
- you do not deactivate a cooking zone or change the heat setting. After some time - comes on and the hob deactivates.

**The relation between the heat setting and the time after which the hob deactivates:**

| Heat setting | The hob deactivates after |
|---|---|
| u, 1 - 3 | 6 hours |
| 4 - 7 | 5 hours |
| 8 - 9 | 4 hours |
| 10 - 14 | 1.5 hour |

## 4.3 The heat setting

To set or change the heat setting:

Touch the control bar at the correct heat setting or move your finger along the control bar until you reach the correct heat setting.

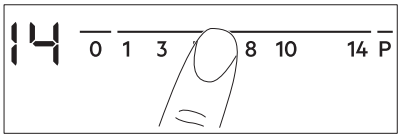


## 4.4 Using the cooking zones

Place the cookware in the centre of the selected zone. Induction cooking zones adapt to the dimension of the bottom of the cookware automatically.

You can cook with large cookware placed on two cooking zones at the same time. The cookware must cover the centres of both zones.

## 4.5 Automatic Heat Up

Activate this function to get a desired heat setting in a shorter time. When it is on, the zone operates on the highest setting in the beginning and then continues to cook at the desired heating setting.

To activate the function the cooking zone must be cold.

**To activate the function for a cooking zone:** touch P (P comes on). Immediately touch a desired heat setting. After 3 seconds A comes on.

**To deactivate the function:** change the heat setting.

## 4.6 PowerBoost

This function makes more power available to the induction cooking zones. The function can be activated for the induction cooking zone only for a limited period of time. After this time the induction cooking zone automatically sets back to the highest heat setting.

Refer to “Technical information” chapter.

**To activate the function for a cooking zone:** touch P. P comes on.

**To deactivate the function:** change the heat setting.

## 4.7 Timer

**Count Down Timer**
You can use this function to set how long the cooking zone should operate for a single cooking session.

First set the heat setting for the cooking zone then set the function.

**To set the cooking zone:** touch ⏲ again and again until the indicator of a necessary cooking zone comes on.

**To activate the function:** touch + of the timer to set the time (00 - 99 minutes). When the indicator of the cooking zone starts to flash slowly the time counts down.

**To see the remaining time:** set the cooking zone with ⏲. The indicator of the cooking zone starts to flash quickly. The display shows the remaining time.

**To change the time:** set the cooking zone with ⏲. Touch + or —.

**To deactivate the function:** set the cooking zone with ⏲ and touch —. The remaining time counts back to 00. The indicator of the cooking zone goes out.

When the time comes to an end, the sound operates and 00 flashes. The cooking zone deactivates.

**To stop the sound:** touch ⏲.

**CountUp Timer (The count up timer)**
You can use this function to monitor how long the cooking zone operates.

**To set the cooking zone:** touch ⏲ again and again until the indicator of a necessary cooking zone comes on.

**To activate the function:** touch — of the timer. UP comes on. When the indicator of the cooking zone starts to flash slowly the time counts up. The display switches between UP and counted time (minutes).

**To see how long the cooking zone operates:** set the cooking zone with ⏲. The indicator of the cooking zone starts to flash quickly. The display shows how long the zone operates.

**To deactivate the function:** set the cooking zone with ⏲ and touch + or —. The indicator of the cooking zone goes out.

**Minute Minder**
You can use this function as a **Minute Minder** when the hob is activated and the cooking zones do not operate. The heat setting display shows 0.

**To activate the function:** touch ⏲. Touch + or — of the timer to set the time. When the time comes to an end, the sound operates and **00** flashes.

**To stop the sound:** touch ⏲.

The function has no effect on the operation of the cooking zones.

## 4.8 Lock

You can lock the control panel while cooking zones operate. It prevents an accidental change of the heat setting.

**Set the heat setting first.**

**To activate the function:** touch 🔒. L comes on for 4 seconds. The Timer stays on.

**To deactivate the function:** touch 🔒. The previous heat setting comes on.

When you deactivate the hob, you also deactivate this function.

## 4.9 Child Safety Device

This function prevents an accidental operation of the hob.

**To activate the function:** activate the hob with ⏻. Do not set the heat setting.

Touch for 4 seconds. comes on. Deactivate the hob with .

**To deactivate the function:** activate the hob with . Do not set the heat setting. Touch for 4 seconds. comes on. Deactivate the hob with .

**To override the function for only one cooking time:** activate the hob with . comes on. Touch for 4 seconds. **Set the heat setting in 10 seconds.** You can operate the hob. When you deactivate the hob with the function operates again.

## 4.10 OffSound Control (Deactivating and activating the sounds)

Deactivate the hob. Touch for 3 seconds. The display comes on and goes out. Touch for 3 seconds. or comes on. Touch of the timer to choose one of the following:

- - the sounds are off
- - the sounds are on

To confirm your selection wait until the hob deactivates automatically.

When the function is set to you can hear the sounds only when:

- you touch
- Minute Minder comes down
- Count Down Timer comes down
- you put something on the control panel.

## 4.11 Power management

- Cooking zones are grouped according to the location and number of the phases in the hob. See the illustration.
- Each phase has a maximum electricity loading of 3700 W.
- The function divides the power between cooking zones connected to the same phase.
- The function activates when the total electricity loading of the cooking zones connected to a single phase exceeds 3700 W.
- The function decreases the power to the other cooking zones connected to the same phase.
- The heat setting display of the reduced zones changes between two levels.

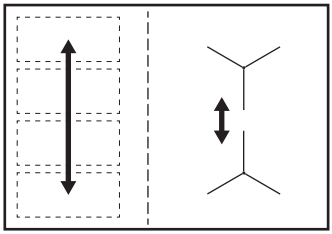

## 4.12 Hob²Hood

It is an advanced automatic function which connects the hob to a special hood. Both the hob and the hood have an infrared signal communicator. Speed of the fan is defined automatically on basis of mode setting and temperature of the hottest cookware on the hob. You can also operate the fan from the hob manually.

For most of the hoods the remote system is originally deactivated. Activate it before you use the function. For more information refer to hood user manual.

**Operating the function automatically**

To operate the function automatically set the automatic mode to H1 – H6. The hob is originally set to H5. The hood reacts whenever you operate the hob. The hob recognizes temperature of the cookware automatically and adjusts the speed of the fan.

**Automatic modes**

| | Auto-matic light | Boiling[1)] | Frying[2)] |
|---|---|---|---|
| Mode H0 | Off | Off | Off |
| Mode H1 | On | Off | Off |

| | Auto-matic light | Boiling[1)] | Frying[2)] |
|---|---|---|---|
| Mode H2 [3)] | On | Fan speed 1 | Fan speed 1 |
| Mode H3 | On | Off | Fan speed 1 |
| Mode H4 | On | Fan speed 1 | Fan speed 1 |
| Mode H5 | On | Fan speed 1 | Fan speed 2 |
| Mode H6 | On | Fan speed 2 | Fan speed 3 |

**1)** The hob detects the boiling process and activates fan speed in accordance with automatic mode.

**2)** The hob detects the frying process and activates fan speed in accordance with automatic mode.

**3)** This mode activates the fan and the light and does not rely on the temperature.

**Changing the automatic mode**

1. Deactivate the appliance.
2. Touch ⏻ for 3 seconds. The display comes on and goes off
3. Touch 🔒 for 3 seconds.
4. Touch ⏲ a few times until H comes on.
5. Touch + of the Timer to select an automatic mode.

To operate the hood directly on the hood panel deactivate the automatic mode of the function.

When you finish cooking and deactivate the hob, the hood fan may still operate for a certain period of time. After that time the system deactivates the fan automatically and prevents you from accidental activation of the fan for the next 30 seconds.

**Operating the fan speed manually**

You can also operate the function manually. To do that touch ≋ when the hob is active. This deactivates automatic operation of the function and allows you to change the fan speed manually. When you press ≋ you raise the fan speed by one. When you reach an intensive level and press ≋ again you will set fan speed to 0 which deactivates the hood fan. To start the fan again with fan speed 1 touch ≋.

To activate automatic operation of the function, deactivate the hob and activate it again.

**Activating the light**

You can set the hob to activate the light automatically whenever you activate the hob. To do so set the automatic mode to H1 – H6.

The light on the hood deactivates 2 minutes after deactivating the hob.

# 5. FLEXIBLE INDUCTION COOKING AREA

**WARNING!**
Refer to Safety chapters.

## 5.1 FlexiBridge function

The flexible induction cooking area consists of four sections. The sections can be combined into two cooking zones with different size, or into one large cooking area. You choose the combination of the sections by choosing the mode applicable to the size of the cookware you want to use. There are three modes: Standard (activated automatically when you activate the hob), Big Bridge and Max Bridge.

To set the heat setting use two left side control bars.

**Switching between the modes**

To switch between the modes use sensor field: ⊞.

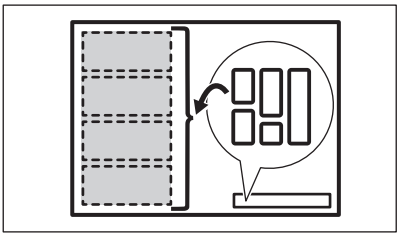

When you switch between the modes the heat setting is set back to **0**.

**Diameter and position of the cookware**

Choose the mode applicable to the size and the shape of the cookware. The cookware should cover the selected area as much as possible. Place the cookware centrally on the selected area!

Place the cookware with the bottom diameter smaller than 160 mm centrally on a single section.

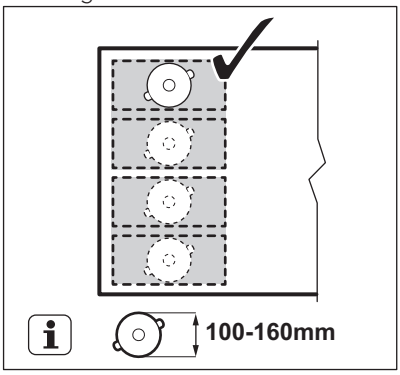


Place the cookware with the bottom diameter larger then 160 mm centrally between two sections.

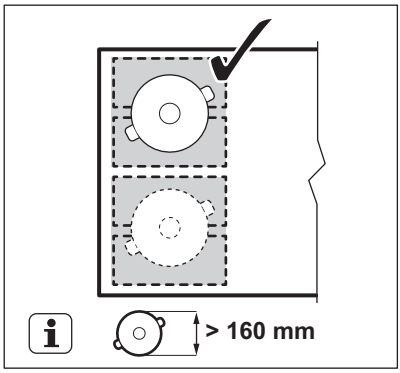


## 5.2 FlexiBridge Standard mode

This mode is active when you activate the hob. It connects the sections into two separate cooking zones. You can set the heat setting for each zone separately. Use two left side control bars.

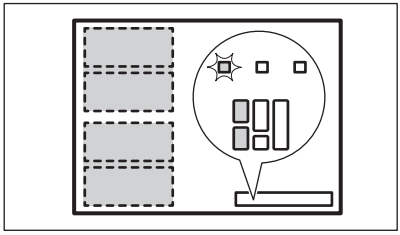

**Correct cookware position:**

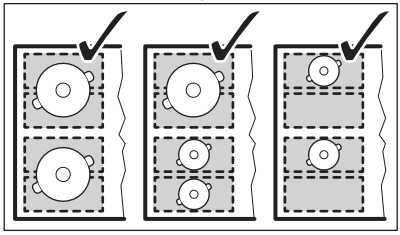

**Incorrect cookware position:**

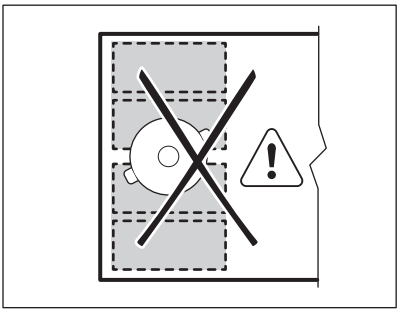

## 5.3 FlexiBridge Big Bridge mode

To activate the mode press until you see the correct mode indicator . This mode connects three rear sections into one cooking zone. The one front section is not connected and operates as a separate cooking zone. You can set the heat setting for each zone separately. Use two left side control bars.

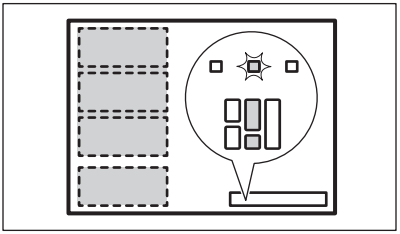

**Correct cookware position:**

To use this mode you have to place the cookware on the three connected sections. If you use cookware smaller than two sections the display shows F and after 2 minutes the zone switches off.

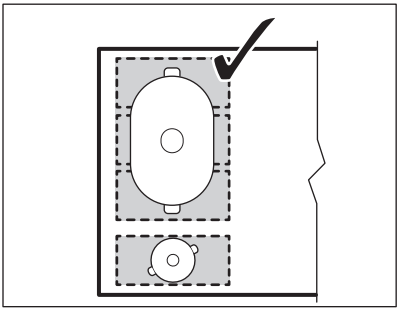

**Incorrect cookware position:**

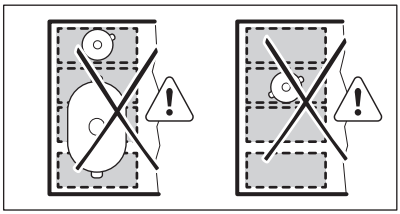

## 5.4 FlexiBridge Max Bridge mode

To activate the mode press until you see the correct mode indicator . This mode connects all sections into one cooking zone. To set the heat setting use any of the two control bars on the left side.

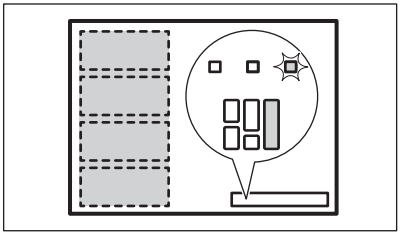

**Correct cookware position:**

To use this mode you have to place the cookware on the four connected sections. If you use cookware smaller than three sections the display shows F and after 2 minutes the zone switches off.

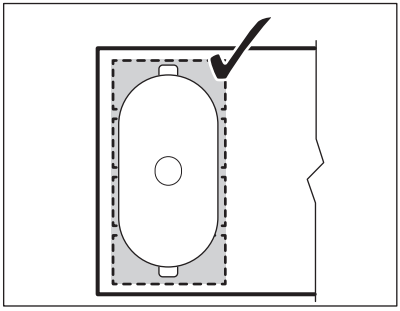

**Incorrect cookware position:**

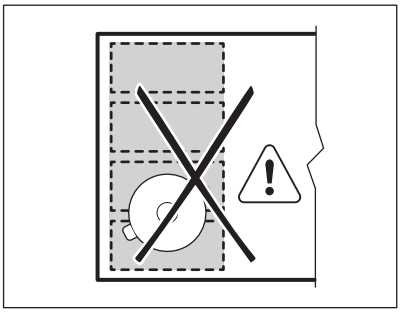

## 5.5 PowerSlide function

This function allows you to adjust the temperature by moving the cookware to a different position on the induction cooking area.

The function divides the induction cooking area into three areas with different heat settings. The hob detects the position of the cookware and adjust the heat setting corresponding with the position. You can place the cookware in the front, middle or rear position. If you place the cookware in the front you get the highest heat setting. To decrease it, move the cookware to middle or rear position.

Use only one pot when you operate the function.

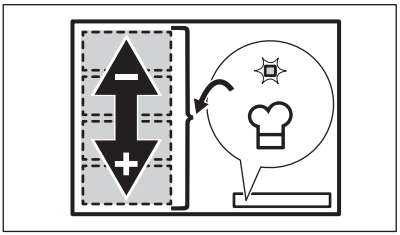

**General information:**

- 160 mm is the minimum bottom diameter of the cookware for this function.
- Heat setting display for the left rear control bar shows the position of the cookware on the induction cooking area. Front 1_, middle 1-, rear 1¯.

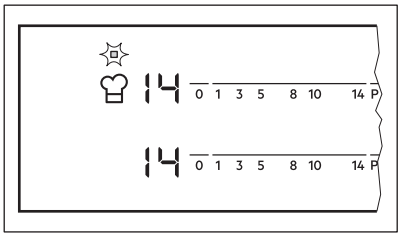


- Heat setting display for the left front control bar shows the heat setting. **To change the heat setting use left front control bar.**
- When you activate the function for the first time you will get heat setting 14 for the front position, 9 for the middle position and 3 for the rear position.

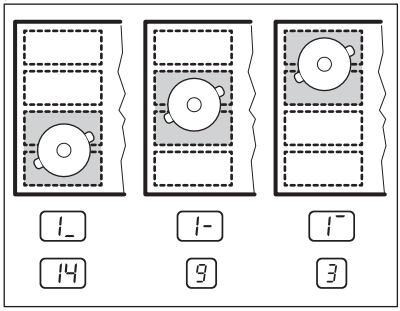


You can change the heat settings for each position separately. The hob will remember your heat settings next time you activate the function.

**Activating the function**

To activate the function place the cookware in the correct position on the cooking area. Touch . The indicator above the symbol comes on. If you do not place the cookware on the cooking area F comes on and after 2 minutes the flexible induction cooking area is set to 0.

**Deactivating the function**

To deactivate the function touch or set the heat setting to 0. The indicator above the symbol goes off.

# 6. HINTS AND TIPS

**WARNING!**
Refer to Safety chapters.

## 6.1 Cookware

For induction cooking zones a strong electro-magnetic field creates the heat in the cookware very quickly.

Use the induction cooking zones with correct cookware.

**Cookware material**

- **correct:** cast iron, steel, enamelled steel, stainless steel, the bottom made of multi-layer (with correct mark from a manufacturer).
- **not correct:** aluminium, copper, brass, glass, ceramic, porcelain.

**Cookware is correct for an induction hob if:**

- some water boils very quickly on a zone set to the highest heat setting.
- a magnet pulls on to the bottom of the cookware.

The printing on the flexible induction cooking area may become dirty or change colour from sliding the cookware. You can clean the area in a standard way.

The bottom of the cookware must be as thick and flat as possible.

**Cookware dimensions**

Induction cooking zones adapt to the dimension of the bottom of the cookware automatically to some limit.

The cooking zone efficiency is related to the diameter of the cookware. The cookware with a smaller diameter than the minimum receives only a part of the power generated by the cooking zone.

Refer to "Technical information" chapter.

## 6.2 The noises during operation

**If you can hear:**

- crack noise: cookware is made of different materials (sandwich construction).
- whistle sound: you use the cooking zone with high power level and the cookware is made of different materials (sandwich construction).
- humming: you use high power level.
- clicking: electric switching occurs.
- hissing, buzzing: the fan operates.

**The noises are normal and do not refer to hob malfunction.**

## 6.3 Öko Timer (Eco Timer)

To save energy, the heater of the cooking zone deactivates before the count down timer sounds. The difference in the operation time depends on the heat setting level and the length of the cooking operation.

## 6.4 Examples of cooking applications

The correlation between the heat setting of a zone and its consumption of power is not linear. When you increase the heat setting, it is not proportional to the increase of the consumption of power. It means that a cooking zone with the medium heat setting uses less than a half of its power.

The data in the table is for guidance only.

| Heat setting | Use to: | Time (min) | Hints |
|---|---|---|---|
| ⏑ - 1 | Keep cooked food warm. | as necessary | Put a lid on the cookware. |
| 1 - 3 | Hollandaise sauce, melt: butter, chocolate, gelatine. | 5 - 25 | Mix from time to time. |
| 1 - 3 | Solidify: fluffy omelettes, baked eggs. | 10 - 40 | Cook with a lid on. |
| 3 - 5 | Simmer rice and milkbased dishes, heat up ready-cooked meals. | 25 - 50 | Add at least twice as much liquid as rice, mix milk dishes halfway through the procedure. |
| 5 - 7 | Steam vegetables, fish, meat. | 20 - 45 | Add a couple of tablespoons of liquid. |
| 7 - 9 | Steam potatoes. | 20 - 60 | Use max. ¼ l of water for 750 g of potatoes. |
| 7 - 9 | Cook larger quantities of food, stews and soups. | 60 - 150 | Up to 3 l of liquid plus ingredients. |
| 9 - 12 | Gentle fry: escalope, veal cordon bleu, cutlets, rissoles, sausages, liver, roux, eggs, pancakes, doughnuts. | as necessary | Turn halfway through. |
| 12 - 13 | Heavy fry, hash browns, loin steaks, steaks. | 5 - 15 | Turn halfway through. |
| 14 | Boil water, cook pasta, sear meat (goulash, pot roast), deep-fry chips. | | |
| P | Boil large quantities of water. PowerBoost is activated. | | |

## 6.5 Hints and Tips for Hob²Hood

When you operate the hob with the function:

- Protect the hood panel from direct sunlight.
- Do not spot halogen light on the hood panel.
- Do not cover the hob panel.
- Do not interrupt the signal between the hob and the hood (for example with a hand or a cookware handle). See the picture.

**The hood in the picture is only exemplary.**

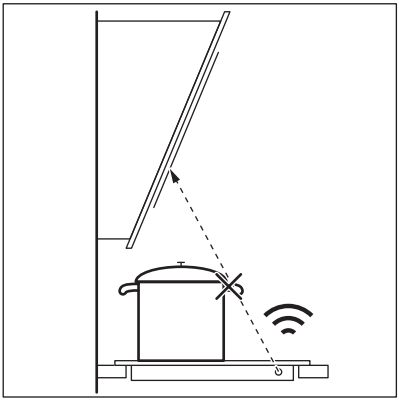

Other remotely controlled appliances may block the signal. Do not use any remotely controlled appliances at the time when you use the function on the hob.

**Cooker hoods with the Hob²Hood function**

To find the full range of cooker hoods which work with this function refer to our consumer website. The AEG cooker hoods that work with this function must have the symbol .

# 7. CARE AND CLEANING

**WARNING!**
Refer to Safety chapters.

## 7.1 General information

- Clean the hob after each use.
- Always use cookware with clean bottom.
- Scratches or dark stains on the surface have no effect on how the hob operates.
- Use a special cleaner applicable for the surface of the hob.
- Use a special scraper for the glass.

## 7.2 Cleaning the hob

- **Remove immediately:** melted plastic, plastic foil, sugar and food with sugar. If not, the dirt can cause damage to the hob. Take care to avoid burns. Put the special scraper on the glass surface at an acute angle and move the blade on the surface.
- **Remove when the hob is sufficiently cool:** limescale rings, water rings, fat stains, shiny metallic discoloration. Clean the hob with a moist cloth and non-abrasive detergent. After cleaning, wipe the hob dry with a soft cloth.
- **Remove shiny metallic discoloration:** use a solution of water with vinegar and clean the glass surface with a moist cloth.

# 8. TROUBLESHOOTING

**WARNING!**
Refer to Safety chapters.

## 8.1 What to do if...

| Problem | Possible cause | Remedy |
|---|---|---|
| You cannot activate or operate the hob. | The hob is not connected to an electrical supply or it is connected incorrectly. | Check if the hob is correctly connected to the electrical supply. Refer to the connection diagram. |
| | The fuse is blown. | Make sure that the fuse is the cause of the malfunction. If the fuse is blown again and again, contact a qualified electrician. |

| Problem | Possible cause | Remedy |
|---|---|---|
| | You do not set the heat setting for 10 seconds. | Activate the hob again and set the heat setting in less than 10 seconds. |
| | You touched 2 or more sensor fields at the same time. | Touch only one sensor field. |
| | There is water or fat stains on the control panel. | Clean the control panel. |
| An acoustic signal sounds and the hob deactivates. An acoustic signal sounds when the hob is deactivated. | You put something on one or more sensor fields. | Remove the object from the sensor fields. |
| The hob deactivates. | You put something on the sensor field ⏻. | Remove the object from the sensor field. |
| Residual heat indicator does not come on. | The zone is not hot because it operated only for a short time or the sensor is damaged. | If the zone operated sufficiently long to be hot, speak to an Authorised Service Centre. |
| Hob²Hood does not work. | You covered the control panel. | Remove the object from the control panel. |
| Automatic Heat Up does not operate. | The zone is hot. | Let the zone become sufficiently cool. |
| | The highest heat setting is set. | The highest heat setting has the same power as the function. |
| The heat setting changes between two levels. | Power management operates. | Refer to "Daily use". |
| The sensor fields become hot. | The cookware is too large or you put it too near to the controls. | Put large cookware on the rear zones if possible. |
| There is no sound when you touch the panel sensor fields. | The sounds are deactivated. | Activate the sounds. Refer to "Daily use". |
| The flexible induction cooking area does not heat up the cookware. | The cookware is in a wrong position on the flexible induction cooking area. | Place the cookware in the correct position on the flexible induction cooking area. The position of the cookware depends on the activated function or function mode. Refer to "Flexible induction cooking area". |

| Problem | Possible cause | Remedy |
|---|---|---|
| | The diameter of the bottom of the cookware is incorrect for the activated function or function mode. | Use cookware with a diameter applicable to the activated function or function mode. Use cookware with a diameter smaller than 160 mm on a single section of the flexible induction cooking area. Refer to "Flexible induction cooking area". |
| [L] comes on. | Child Safety Device or Lock operates. | Refer to "Daily use". |
| [F] comes on. | There is no cookware on the zone. | Put cookware on the zone. |
| | The cookware is unsuitable. | Use suitable cookware. Refer to "Hints and tips". |
| | The diameter of the bottom of the cookware is too small for the zone. | Use cookware with correct dimensions. Refer to "Technical data". |
| | FlexiBridge operates. One or more sections of the function mode which operates are not covered by the cookware. | Place the cookware on the correct number of sections of the function mode which operates or change the function mode. Refer to "Flexible induction cooking area". |
| | PowerSlide operates. Two pots are placed on the flexible induction cooking area. | Use only one pot. Refer to "Flexible induction cooking area". |
| [E] and a number come on. | There is an error in the hob. | Deactivate the hob and activate it again after 30 seconds. If [E] comes on again, disconnect the hob from the electrical supply. After 30 seconds, connect the hob again. If the problem continues, speak to an Authorised Service Centre. |
| You can hear a constant beep noise. | The electrical connection is incorrect. | Disconnect the hob from the electrical supply. Ask a qualified electrician to check the installation. |

## 8.2 If you cannot find a solution...

If you cannot find a solution to the problem yourself, contact your dealer or an Authorised Service Centre. Give the data from the rating plate. Give also three digit letter code for the glass ceramic (it is in the corner of the glass surface) and an error message that comes on. Make sure, you operated the hob correctly. If not the servicing by a service technician or dealer will not be free of charge, also during the warranty period. The instructions about the Service Centre and conditions of guarantee are in the guarantee booklet.

# 9. INSTALLATION

**WARNING!**
Refer to Safety chapters.

## 9.1 Before the installation

Before you install the hob, write down the information bellow from the rating plate. The rating plate is on the bottom of the hob.

Serial number .....

## 9.2 Built-in hobs

Only use the built-in hobs after you assemble the hob into correct built-in units and work surfaces that align to the standards.

## 9.3 Connection cable

- The hob is supplied with a connection cable.
- To replace the damaged mains cable, use the cable type: H05V2V2-F which withstands a temperature of 90°C or higher. Speak to your local Service Centre.

## 9.4 Assembly

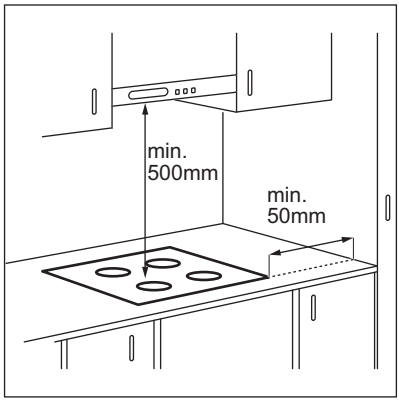


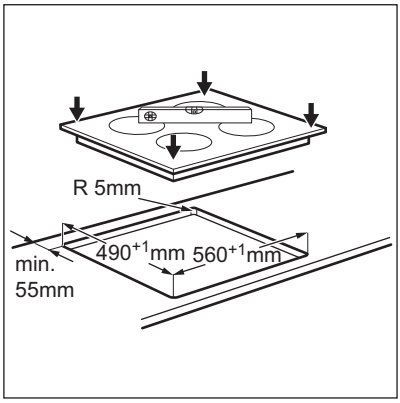

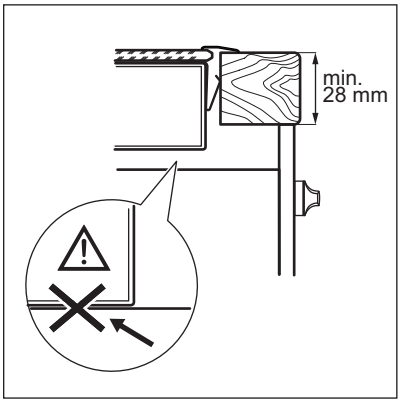


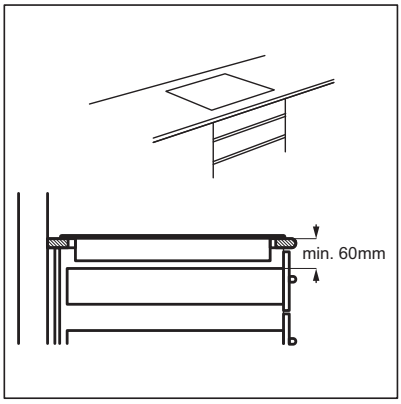


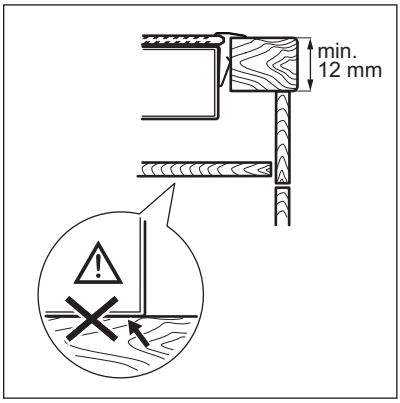


# 10. TECHNICAL DATA

## 10.1 Rating plate

Model IKE64471XB
Typ 62 B4A 05 AA
Induction 7.35 kW
Ser.Nr. .....
AEG

PNC 949 597 226 00
220 - 240 V / 400 V 2N 50 - 60 Hz
Made in Germany
7.35 kW

## 10.2 Cooking zones specification

| Cooking zone | Nominal power (maximum heat setting) [W] | PowerBoost [W] | PowerBoost maximum duration [min] | Cookware diameter [mm] |
|---|---|---|---|---|
| Right front | 1400 | 2500 | 4 | 125 - 145 |
| Right rear | 1800 | 2800 | 10 | 145 - 180 |

| Cooking zone | Nominal power (maximum heat setting) [W] | PowerBoost [W] | PowerBoost maximum duration [min] | Cookware diameter [mm] |
|---|---|---|---|---|
| Flexible induction cooking area | 2300 | 3200 | 10 | minimum 100 |

The power of the cooking zones can be different in some small range from the data in the table. It changes with the material and dimensions of the cookware.

For optimal cooking results use cookware no larger than the diameter in the table.

# 11. ENERGY EFFICIENCY

## 11.1 Product information according to EU 66/2014

| | | |
|---|---|---|
| Model identification | | IKE64471XB |
| Type of hob | | Built-In Hob |
| Number of cooking zones | | 2 |
| Number of cooking areas | | 1 |
| Heating technology | | Induction |
| Diameter of circular cooking zones (Ø) | Right front<br>Right rear | 14.5 cm<br>18.0 cm |
| Lenght (L) and width (W) of the cooking area | Left | L 45.9 cm<br>W 21.4 cm |
| Energy consumption per cooking zone (EC electric cooking) | Right front<br>Right rear | 180.4 Wh / kg<br>175.3 Wh / kg |
| Energy consumption of the cooking area (EC electric cooking) | Left | 182.6 Wh / kg |
| Energy consumption of the hob (EC electric hob) | | 180.7 Wh / kg |

EN 60350-2 - Household electric cooking appliances - Part 2: Hobs - Methods for measuring performance

## 11.2 Energy saving

You can save energy during everyday cooking if you follow below hints.

- When you heat up water, use only the amount you need.
- If it is possible, always put the lids on the cookware.
- Before you activate the cooking zone put the cookware on it.
- Put the smaller cookware on the smaller cooking zones.
- Put the cookware directly in the centre of the cooking zone.
- Use the residual heat to keep the food warm or to melt it.

# 12. ENVIRONMENTAL CONCERNS

Recycle materials with the symbol . Put the packaging in relevant containers to recycle it. Help protect the environment and human health by recycling waste of electrical and electronic appliances. Do not dispose of appliances marked with the symbol  with the household waste. Return the product to your local recycling facility or contact your municipal office.

www.aeg.com/shop



867333514-D-072018

CE

AEG