# HIE 3B19 C

12NC: F105465

GTIN (EAN) code: 8050147054659



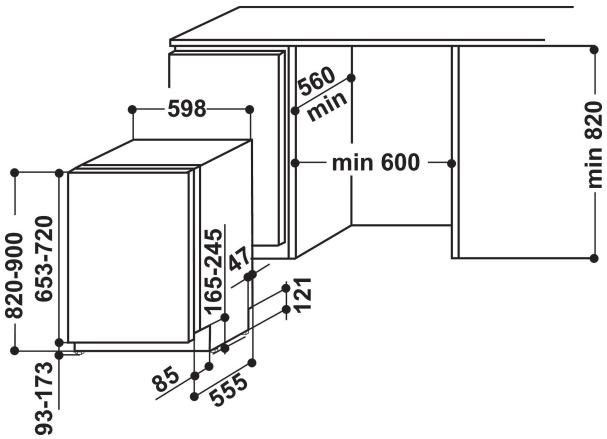


## MAIN FEATURES

| | |
|---|---|
| Construction type | Built-in |
| Installation type | Full-integrated |
| Type of control | Electronic |
| Type of control settings | - |
| Removable work top | No |
| Door decor panel | N/A |
| Main colour of product | White |
| Electrical connection rating (W) | 1900 |
| Current (A) | 10 |
| Voltage (V) | 220-240 |
| Frequency (Hz) | 50 |
| Length of Electrical Supply Cord (cm) | 130 |
| Plug type | Schuko |
| Length inlet hose (cm) | 155 |
| Length outlet hose (cm) | 150 |
| Adjustable plinth | No |
| Height of removable worktop (mm) | 0 |
| Adjustable feet | Yes - all from front |
| Height of the product | 820 |
| Width of the product | 598 |
| Depth of the product | 555 |
| Depth with open door 90 degree (mm) | - |
| Minimum niche height | 820 |
| Maximum niche height | 900 |
| Minimum niche width | 600 |
| Maximum niche width | 600 |
| Niche depth | 560 |
| Net weight (kg) | 35.5 |
| Gross weight (kg) | 37.5 |

## TECHNICAL FEATURES

| | |
|---|---|
| Automatic programmes | No |
| Maximum temperature for water intake (°C) | 60 |
| Start delay options | Continuous |
| Start delay time max. (h) | 12 |
| Progress indicator | - |
| Digital countdown indicator | Yes |
| Salt light indicator | Yes |
| Rinse aid light indicator | Yes |
| Safety device | N/A |
| Adjustable upper basket | Yes |
| Largest loadable dish upper basket (cm) | 0 |
| Largest loadable dish lower basket (cm) | 0 |
| Number of place settings | 13 |

## PERFORMANCES

| | |
|---|---|
| Energy efficiency class - NEW (2010/30/EU) | A+ |
| Energy consumption annual (kWh/annum) - NEW (2010/30/EU) | 296 |
| Duration of the left-on mode - NEW (2010/30/EU) | 12 |
| Power consumption in left-on mode - NEW (2010/30/EU) | 6 |
| Power consumption in off-mode - NEW (2010/30/EU) | 0.5 |
| Water consumption annual (l/annum) - NEW (2010/30/EU) | 3360 |
| Noise level (dB(A) re 1 pW) | 49 |